(No Model.) 4 Sheets—Sheet 1.

A. CHAIX.

CONSECUTIVE NUMBERING ATTACHMENT FOR PAPER MAKING MACHINES.

No. 456,094. Patented July 14, 1891.

Fig 2.

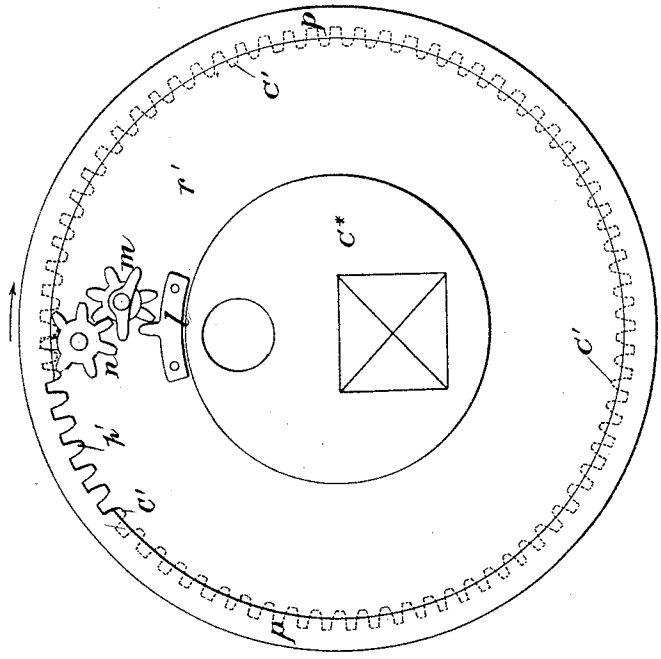

Fig 1.

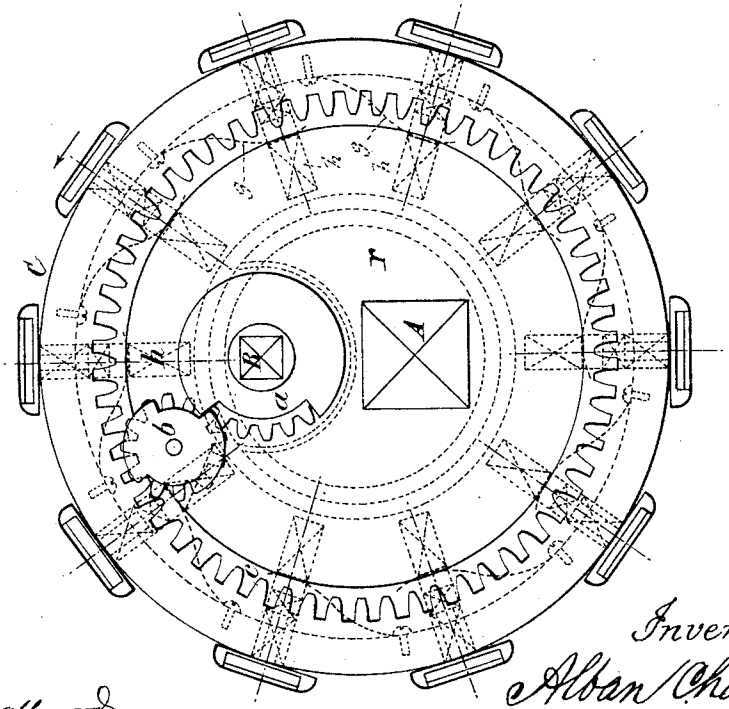

Attest:
Geo. T. Smallwood.
Jas. K. McCathran

Inventor:
Alban Chaix by
A. Pollok
his attorney.

THE NORRIS PETERS CO., PHOTO-LITHO., WASHINGTON, D. C.

(No Model.) 4 Sheets—Sheet 2.

A. CHAIX.

CONSECUTIVE NUMBERING ATTACHMENT FOR PAPER MAKING MACHINES.

No. 456,094. Patented July 14, 1891.

Fig. 4.

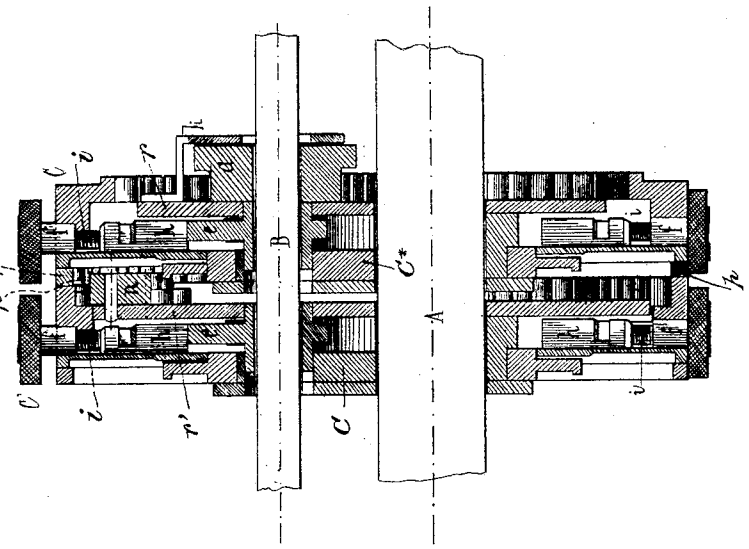

Fig. 3.

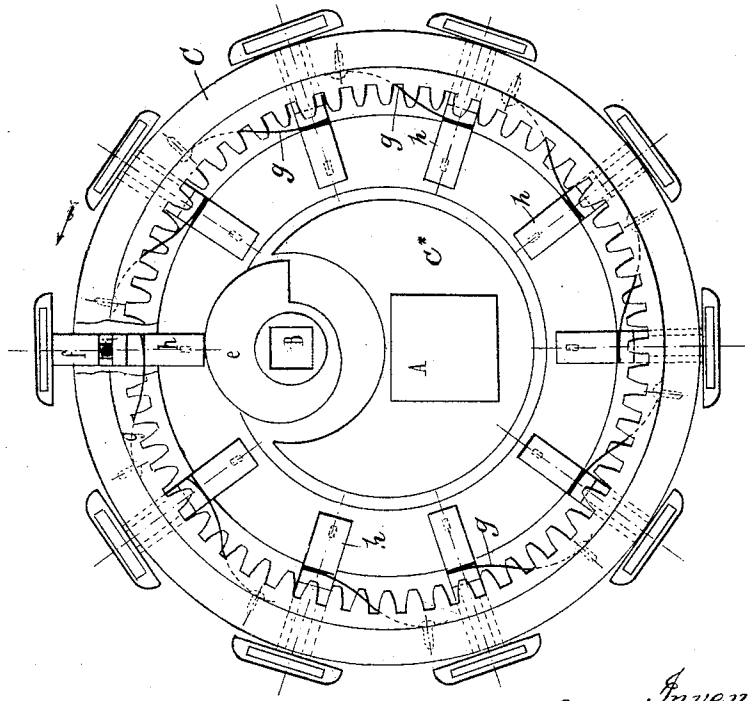

Attest:
Geo. T. Smallwood,
Jas. K. McCathran

Inventor
Alban Chaix by
Dodge
his attorney

THE NORRIS PETERS CO., PHOTO-LITHO., WASHINGTON, D. C.

(No Model.) 4 Sheets—Sheet 3.

A. CHAIX.

CONSECUTIVE NUMBERING ATTACHMENT FOR PAPER MAKING MACHINES.

No. 456,094. Patented July 14, 1891.

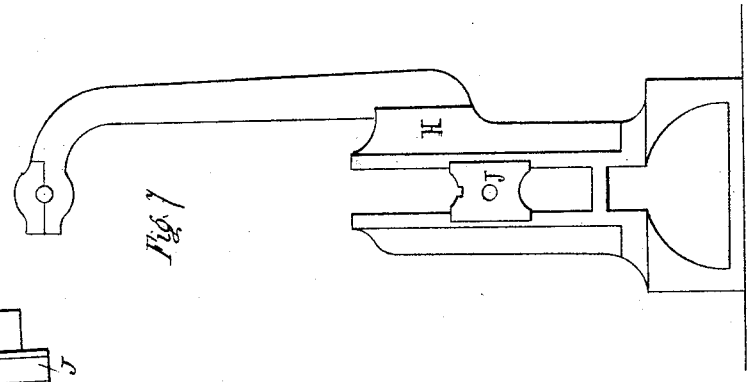

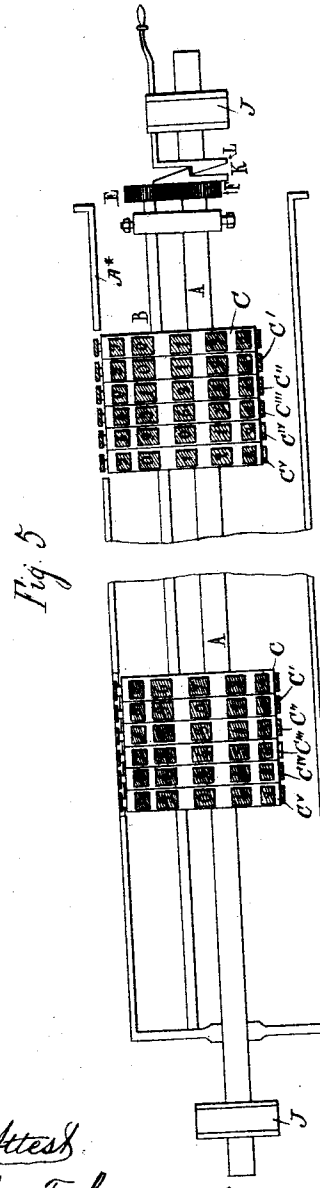

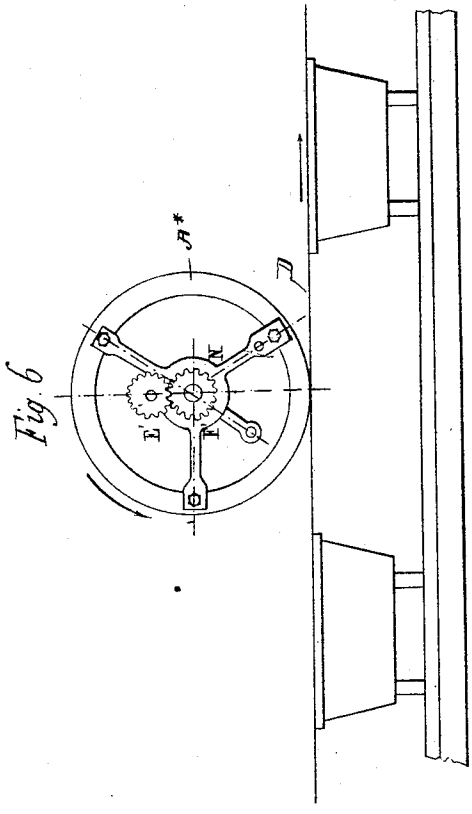

Attest:
Geo. T. Smallwood.
Jas. K. McCathran

Inventor:
Alban Chaix by
P. Bolton
his attorney.

THE NORRIS PETERS CO., PHOTO-LITHO., WASHINGTON, D. C.

(No Model.) 4 Sheets—Sheet 4.

A. CHAIX.

CONSECUTIVE NUMBERING ATTACHMENT FOR PAPER MAKING MACHINES.

No. 456,094. Patented July 14, 1891.

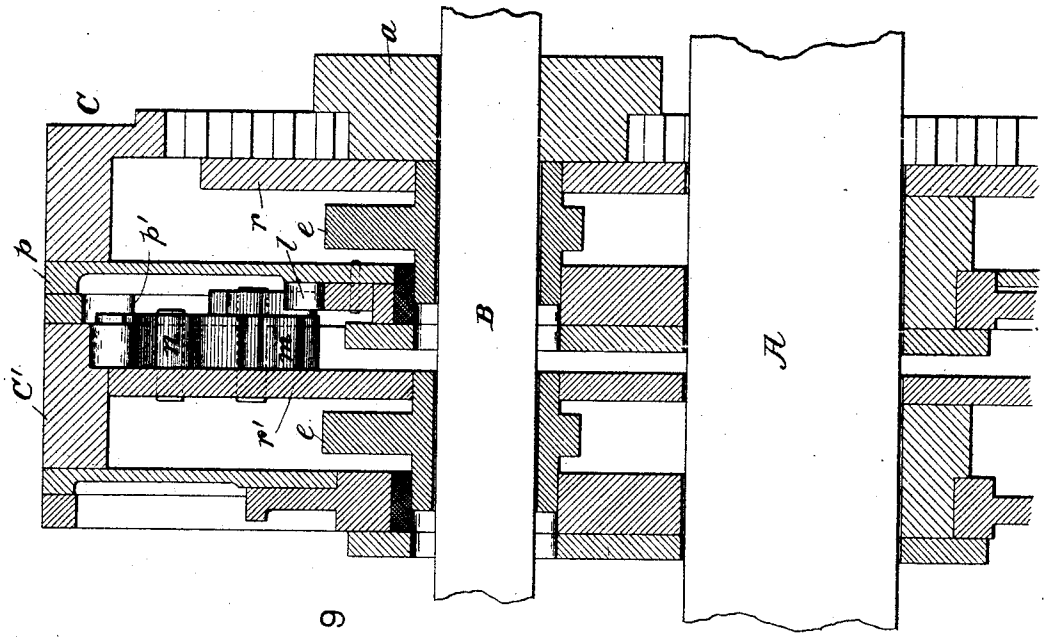

FIG. 9

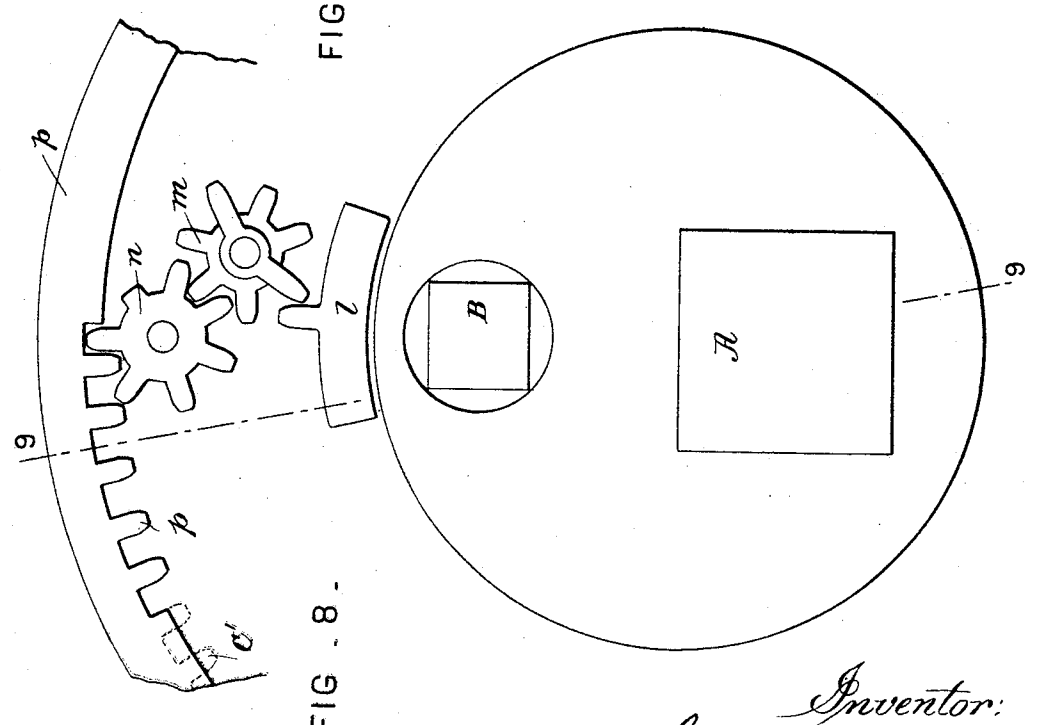

FIG. 8.

Attest: Geo. T. Smallwood, Jos. B. Eiler.

Inventor: Alban Chaix, by A. Pollok, his attorney

THE NORRIS PETERS CO., PHOTO-LITHO., WASHINGTON, D. C.

UNITED STATES PATENT OFFICE.

ALBAN CHAIX, OF PARIS, FRANCE, ASSIGNOR TO THE SOCIÉTÉ ANONYME DITE IMPRIMERIE ET LIBRAIRIE CENTRALES DES CHEMINS DE FER—IMPRIMERIE CHAIX, OF SAME PLACE.

CONSECUTIVE-NUMBERING ATTACHMENT FOR PAPER-MAKING MACHINES.

SPECIFICATION forming part of Letters Patent No. 456,094, dated July 14, 1891.

Application filed November 7, 1889. Serial No. 329,474. (No model.)

To all whom it may concern:

Be it known that I, ALBAN CHAIX, a citizen of the Republic of France, and a resident of Paris, in said Republic, have invented certain new and useful Improvements in Consecutive-Numbering Attachments for Paper-Making Machines, of which the following specification is a full, clear, and exact description.

This invention consists in means for numbering sheets of paper in process of formation on the paper-machine, said means consisting of filigranes or water-mark characters, which are pressed against the sheet of pulp and are shifted to change the number at each impression or after a desired number of impressions; and it also consists in new or improved machinery for effecting such numbering. Heretofore the characters for printing the water-marks have been invariable. In accordance with the present invention a numbering apparatus having characters suitable for forming water-marks or impressions in the pulp and means for automatically shifting said figures is combined with a paper-machine or appropriate parts thereof in such a way as to mark or impress the desired numbers in proper order at suitable intervals on the sheet of pulp as it is fed through the machine. Preferably the numbering apparatus is placed in the pulp-roller or dandy-roll of the paper-machine, and is actuated to shift the printing characters and to bring the same against the sheet of pulp by the rotation of said roller, and this arrangement, which constitutes a special feature of invention, will be particularly described.

There are minor improvements or details which also constitute special features of invention and which can most conveniently be described with the aid of the drawings.

In the accompanying drawings, which form part of this specification, Figure 1 is an end view of a numbering apparatus constructed in accordance with the invention. Figs. 2 and 3 are views in planes parallel to that of Fig. 1. Fig. 4 is a longitudinal section. Figs. 5 and 6 are views illustrating the application of the numbering apparatus to a paper-machine, and Fig. 7 is a detail view of one of the supports for the pulp-roller or dandy. Fig. 8 is a detail view on an enlarged scale in a plane parallel with Fig. 1; and Fig. 9 is a section on line 9 9, Fig. 8.

The numbering apparatus shown is composed of disks C C′, &c., of which there is one for each decimal place in the highest number to be marked or impressed, and each of which forms the carrier for the numerical characters 0 to 9, arranged consecutively around the periphery of the disk. These disks C C′, &c., are mounted on hubs C*, through which passes the squared shaft A of the dandy roller A* of the paper-machine. The squared shaft B also passes through these hubs, but is free to turn therein, being supported in the cams *e*, which on one side are journaled in the hubs C* and on the other in the plates *r r′*, &c., mounted on the shaft A, like the said hubs C*. The object of these cams is to give an impression by moving the appropriate characters radially of the disks C C′, &c., as will be explained hereinafter.

Mounted on the shaft B is the sector-gear *a*, which meshes with the pinion *b*, the latter being mounted on the plate *r* and engaging the interiorly-toothed rim of the units-disk C. The sector-gear *a* is held in place by the piece *k*, whose opposite end is fastened to the plate *r*, and said gear has just enough teeth to turn the disk C through a tenth of a revolution at each rotation of the gear *a* and shaft B relatively to the shaft A. At the end of each complete revolution the units-disk C moves the tens-disk C′ through a tenth of a revolution, and this latter similarly operates the hundreds-disk, which in turn may operate the thousands, and so on indefinitely.

The means adopted for imparting motion to the tens-disk C′ are shown in Figs. 2, 4, 8, and 9. The pinion *n*, which is mounted on the plate *r′* and meshes constantly with the interiorly-toothed rim of the disk C′, is wide enough to mesh also with the interiorly-toothed sector *p′* of the ring *p*, which is fixed to the disk C, said sector containing just the number of teeth necessary to advance the disk C′ one-tenth of a revolution. The untoothed portion of the ring *p* is left with a smooth surface, over which two of the teeth on the projecting portion of the pinion *n* slide,

(see Fig. 2,) their contact with said ring preventing the rotation of the pinion n, except when the sector p' engages the pinion n. To start the pinion n, a finger l, carried by the disk C, is arranged to strike the teeth of the pinion m, which is mounted on the plate r' and meshes with the pinion n. (See Figs. 8 and 9.) From the foregoing description it is evident that if the shaft B be turned relatively to the shaft A the sector-gear a will at each revolution of said shaft B shift the units-disk C the space between two numbers, and that at every tenth shifting or complete revolution of said units-disk the finger l and sector p', carried with said units-disk, will, through the pinions m n, shift the tens-disk C' the space between two numbers. The printing or numbering characters on the said disks are composed of a light body of metallic cloth, on which is formed, in the usual manner, the water-mark character, either plain or shaded; or it is composed of rubber, with the number in relief or depressed; or it is composed in any other known or suitable way for forming characters to impress a water-mark on paper. The characters have each a square stem in two parts f and h, movable radially in guides in the rim of the appropriate disk C C', &c., the two parts f and h being connected with each other by a screw i, in order to provide for adjusting the length of the stem. As the disks C C', &c., are revolved, the numerical characters on each disk are brought successively outside the cam e of that disk in position to be pushed out radially by the said cam e acting against the lower end of the stem f h. The characters are returned and normally held in by the flat springs g, each of which at one end is fastened to the rim of the number-disks C C', &c., while the other end fits in a notch in the stem f h and presses against the inner surface of said notch. The cams e are so placed on the shaft B that the revolution of the latter shifts the number-disks while the characters are withdrawn, and then brings the cams into action to push out the numbers, which are now ready to give an impression. The cams hold these numbers or characters out for about a third of a revolution, during which time they are pressed against the wet sheet of pulp, as will now be explained. As said above, the numbering apparatus is mounted on the squared shaft A of the pulp-roller or dandy A*. Opposite the numbering-disks C C' at one side an opening is formed in the periphery of the roller, (or, if more than one apparatus is placed in a roller, an equal number of openings are formed through said periphery,) as shown in Fig. 5, so that water-mark characters of said apparatus may make their impression on the sheet of pulp. The journals of the dandy or pulp roller are supported in vertically-movable boxes J, guided in supports H, Fig. 7, and the roller rests with yielding pressure on the sheet of pulp on the wire-cloth or table of the machine. Ordinarily the roller rests upon the pulp with its full weight and is carried around by the motion of the wire-cloth. The roller containing the numbering apparatus can be similarly arranged; but on account of its greater weight and resistance to rotation it is well to drive it by a belt at a circumferential speed equal to the speed of the wire-cloth and to avoid flexure by partially counterbalancing the weight or placing below a roller covered with rubber, or by both means. As the roller A* revolves, the numbering apparatus is carried around with it and the water-mark characters, which at the time are exposed through the opening in the periphery of the roller, mark or impress the moving sheet of pulp as they come into contact with it. During this portion of the revolution the characters are pressed out radially by the cams e. In order to revolve the shaft B at each revolution of the shaft A and roller A*, so as to withdraw the cams e, change the position of disks C C', &c., and return the cams e in time for the next impression, the said shaft B has fixed thereon a spur-gear E, which meshes with a similar gear F, mounted loosely on the shaft A and held from rotation by the clutch K L, of which the part L has a handle which rests in a notch on the journal-box J. As the gear E is carried around the stationary gear F, the former is revolved on its axis once at each passage around said gear F and imparts through the shaft B the necessary movements to the sector-gear a and the cams e, as before explained. By withdrawing the part L of the clutch the spur-gear F is released and allowed to rotate with the shaft A, and consequently the numbering apparatus remains unchanged. By disengaging the clutch when the numbers are held out several sheets can be obtained with the same number, if desired. The clutch can be disengaged when the number of water-mark characters are withdrawn.

If two or more numbering apparatus are fixed on the same shaft in the pulp-roller or dandy, they may be spaced by sliding the same along the shaft and providing retaining-collars.

In practice where there are two or more apparatus an equal fraction of the work may be apportioned to each apparatus—as, for example, if fifty thousand sheets are to be numbered and the size of the sheet and of the machine-table permit the working in one roller of two apparatus, the first apparatus may be made to mark the numbers from one to twenty-five thousand and the second from twenty-five thousand and one to fifty thousand simultaneously.

The movement of the numbering apparatus having a direct relation to that of the dandy-roll, in which it is placed, by reason of the revolution of the numbering apparatus at each revolution of the dandy-roll, it follows that the same apparatus may operate with dandy-rolls of different diameter, which is of importance industrially. In fact, the sizes

of the sheets capable of numbering are variable, and it is necessary to place the number in the same position on each sheet. Consequently as the circumference of the dandy-roll represents the length of each sheet it is necessary to use a different dandy-roll for each length of sheet. To number sheets of three or four different sizes, therefore, three or four dandy-rolls of appropriate diameter are necessary, which constitutes only a small expense, since the same numbering apparatus will operate with any one of these three or four rollers.

The numbering apparatus has been described as placed within the pulp-roller or dandy, and this is advantageous for giving the surest and best practical result and as constituting the most convenient arrangement, yet the numbering apparatus constituted as described may operate usefully outside of and independently of the dandy-roll, being placed in front of it at a suitable point on the machine-table. This latter disposition even presents the advantage that by varying the speed of the numbering apparatus relatively to that of the pulp-sheet the spaces between the marks can conveniently be regulated, and thus the same apparatus be adapted to the marking of different sizes of sheet.

It is conceivable that in the course of the manufacture of paper on a continuous machine accidents may happen or the necessities of the service may arise which render necessary the interruption of the numbering while the machine continues to manufacture paper.

The following are two ways of doing this—namely, first, to lift the roller so that it no longer bears on the pulp, or, second, leaving the roller in place to interrupt the numbering by disconnecting the clutch K L and allowing the apparatus to go on marking the number which it showed at the time of disconnecting. As this clutch has only a single tooth, the marking will commence again just where it left off whenever the clutch is again engaged. In spite of all these precautions a certain number of defective sheets may be formed whose place must be supplied, in order that the series may be complete, by sheets which are numbered individually. The machine shown can readily be adapted to supply the missing numbers by connecting the disks C C′, &c., together, so that they turn as one, and then screwing on the numbers in such order that by following around the connected disks a succession of ten of the missing numbers is obtained. When these ten numbers have been run off, the characters can be changed to mark another ten of the missing numbers.

I claim as my invention or discovery—

1. The combination, with the dandy-roll of a paper-making machine, of a water-marking apparatus contained in said dandy-roll and comprising impression-disks having numerical characters thereon and operating mechanism, substantially as described.

2. The combination, with the dandy-roll of a paper-machine, of a numbering apparatus comprising a series of disks provided with characters for impressing numbers upon the sheet of pulp, and shifting mechanism, substantially as indicated, actuated by the rotation of said dandy-roll to change the numbers at each rotation thereof, as set forth.

3. A numbering apparatus comprising numbering-disks, means for automatically shifting the same, radially-movable characters, and the cams inside said disks, substantially as described.

4. The combination, with a rotary shaft, of numbering-disks turning about hubs on said shaft, a second shaft passing loosely through said hubs, gearing for revolving said second shaft, and shifting mechanism for said disks connected with said second shaft for receiving motion therefrom, substantially as described.

5. The combination of a rotary shaft, numbering-disks turning about hubs on said shaft, a second shaft passing loosely through said hubs, radially-movable characters on said disks, cams on said second shaft for moving said characters radially, shifting mechanism for said disks connected with said second shaft, and gearing for revolving the latter, substantially as described.

In testimony whereof I have signed this specification in the presence of two subscribing witnesses.

ALBAN CHAIX.

Witnesses:
JOSEPH COURNIER,
R. J. PRESTON.