United States Patent [19]

Koelschbach

[11] **3,735,699**

[45] **May 29, 1973**

[54] **MULTICOLOR OFFSET SCREEN PRINTING APPARATUS**

[75] Inventor: **Albert Koelschbach,** Cologne-Lindenthal, Germany

[73] Assignee: **Werner Kammann,** Westfalen, Germany

[22] Filed: **Mar. 31, 1970**

[21] Appl. No.: **24,251**

[30] **Foreign Application Priority Data**

Apr. 5, 1969 Germany.....P 19 17 520.3

[52] **U.S. Cl.** **101/124,** 101/35, 101/38, 101/115

[51] **Int. Cl.** **B41f 15/10**

[58] **Field of Search**.....101/35, 36, 38, 39, 101/40, 114, 115, 129, 124, 177, 217, 214, 215, 173

[56] **References Cited**

UNITED STATES PATENTS

1,259,285	3/1918	Reeve	101/215
2,447,521	8/1948	Miller et al.	101/119
2,584,092	1/1952	Keller et al.	101/38 R
3,263,606	8/1966	Poynter	101/177
3,276,358	10/1966	Lusher	101/129
3,587,455	6/1971	Childress	101/35
3,245,341	4/1966	Childress et al.	101/122
2,615,328	10/1952	Tenety	101/38 R
2,846,946	8/1958	Schwarzberger	101/115
3,419,413	12/1968	Euforbia	101/115 UX
2,652,771	9/1953	Fernandez	101/38
3,102,469	9/1963	Sherman	101/122
2,364,277	12/1944	Dey et al.	101/121
3,229,627	1/1966	Pollitt	101/115
3,066,602	12/1962	Ichinose	101/115
3,404,624	10/1968	Proffitt, Jr.	101/40
2,153,453	4/1939	Schneider et al.	101/115
3,461,795	8/1969	Decker et al.	101/114 X

FOREIGN PATENTS OR APPLICATIONS

482,642	4/1938	Great Britain	101/35
546,309	7/1942	Great Britain	101/426

Primary Examiner—Edgar S. Burr
Assistant Examiner—R. E. Suter
Attorney—Sughrue, Rothwell, Mion, Zinn & Macpeak

[57] **ABSTRACT**

An apparatus for producing a multi-color image on an object by means of the known silk screen process, wherein there are a number of silk screens each with its own pattern, the number of screens being equal to the number of colors to be employed. Colored printing media is applied with its own doctor blade to an associated silk screen. An intermediate color carrier such as a belt or a plurality of rollers receives a colored image from each screen and applies the colored image in sequence to an article by rolling contact between the article and the intermediate belt or rollers.

1 Claim, 13 Drawing Figures

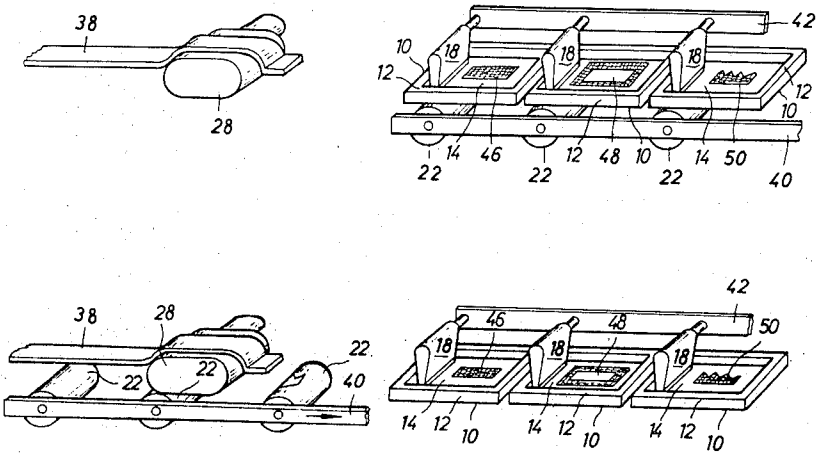

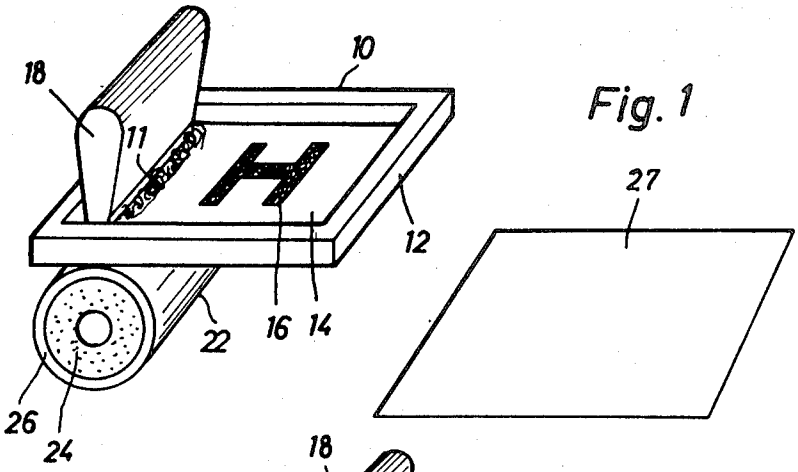

Fig. 1

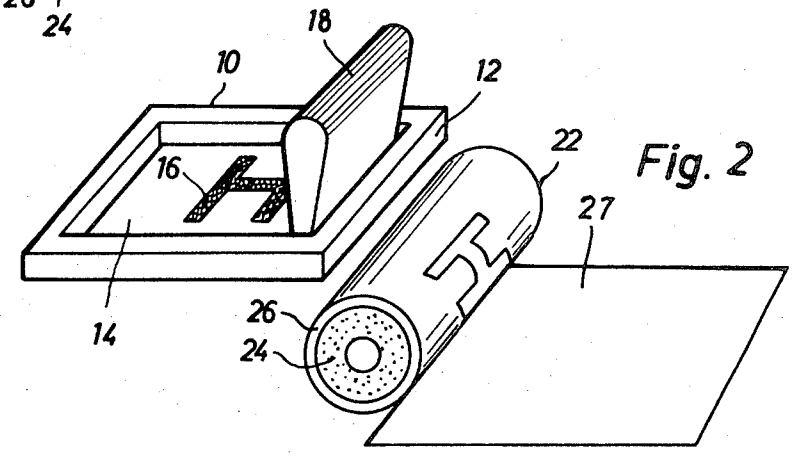

Fig. 2

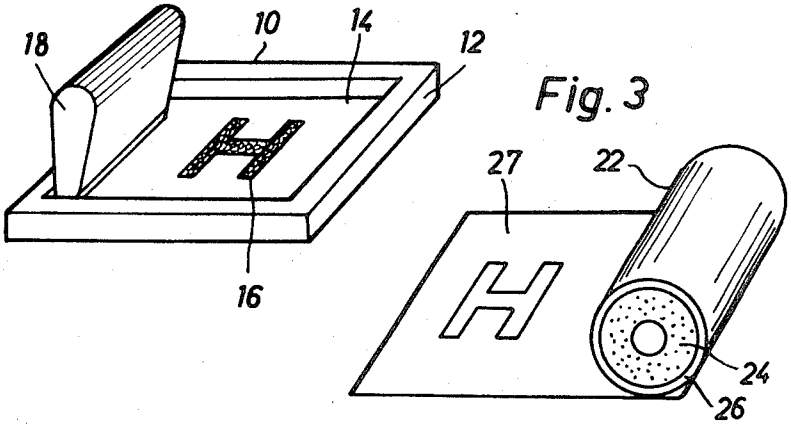

Fig. 3

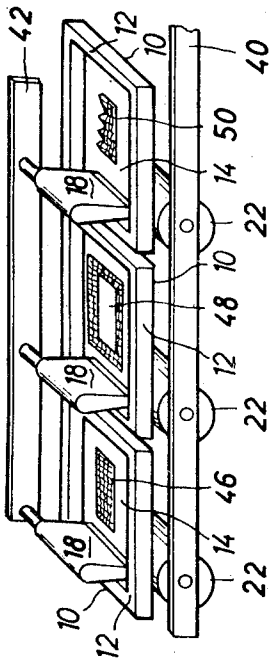

Fig. 4

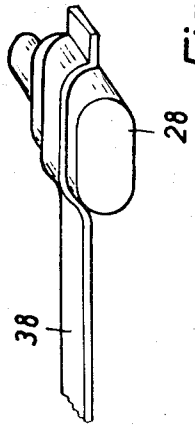

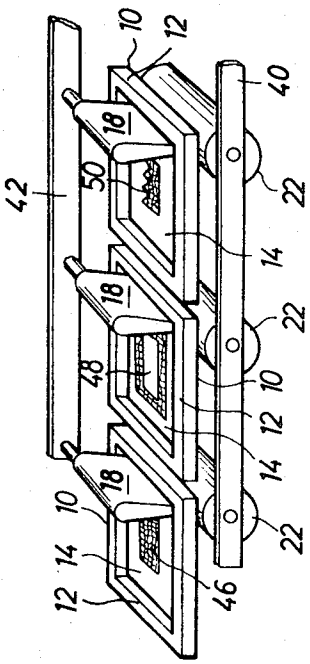

Fig. 5

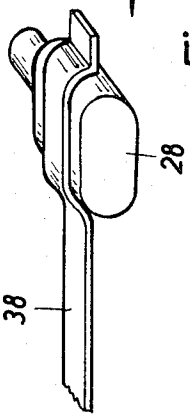

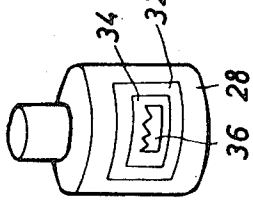

Fig. 6

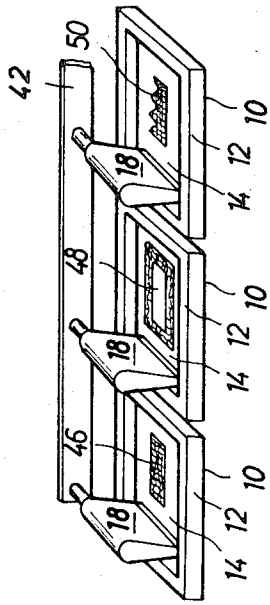

Fig. 7

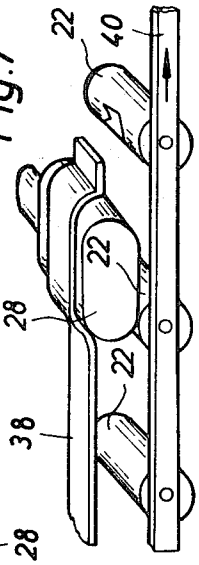

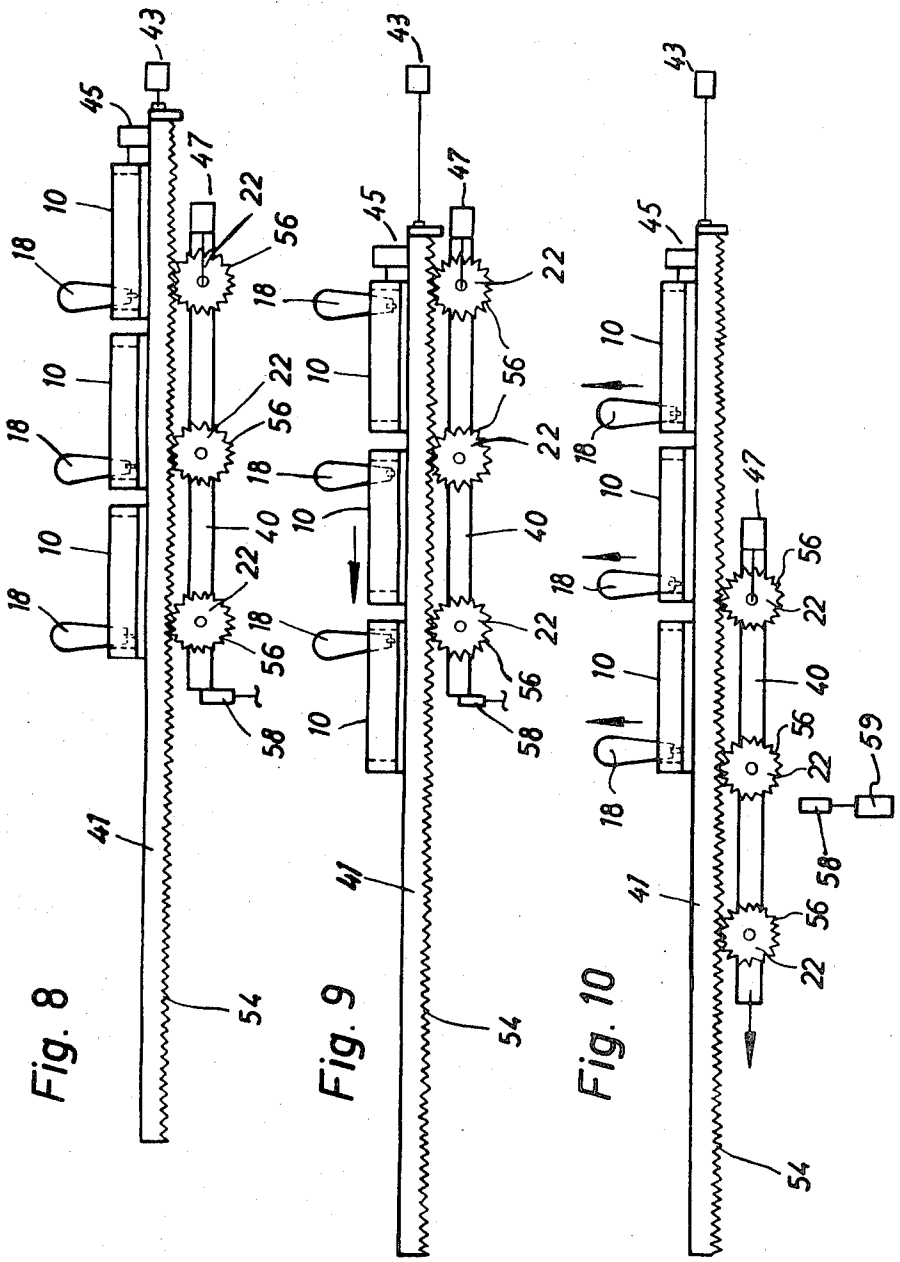

Fig. 8

Fig. 9

Fig. 10

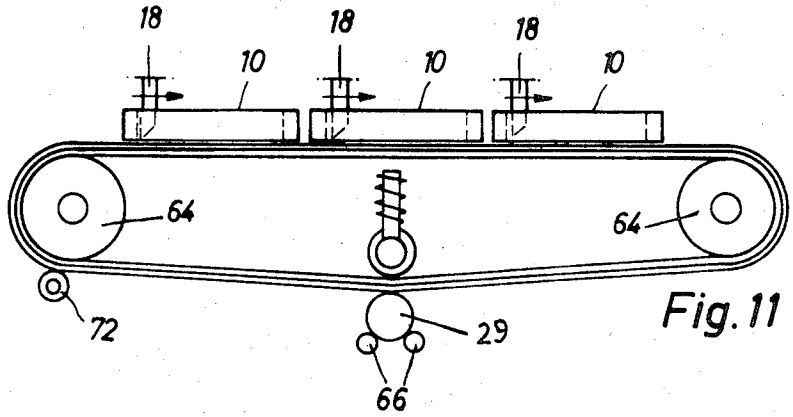

Fig. 11

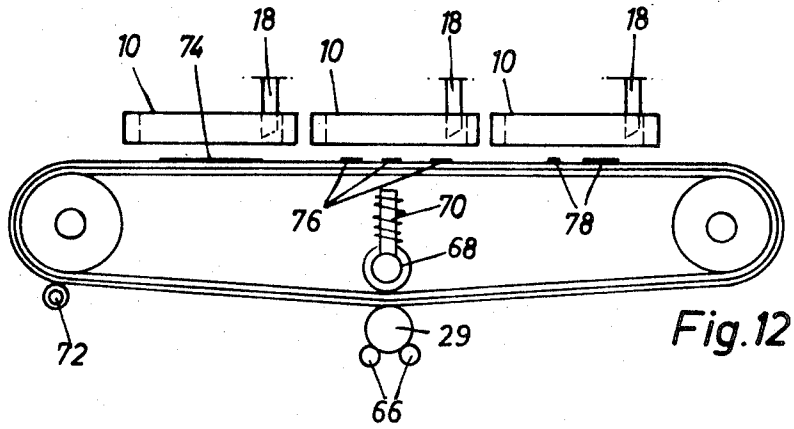

Fig. 12

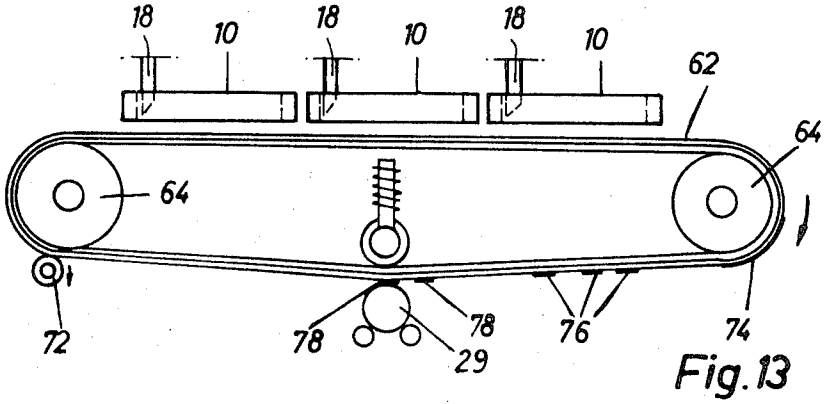

Fig. 13

MULTICOLOR OFFSET SCREEN PRINTING APPARATUS

The invention relates to a multi-color screen printing process for printing a variety of articles, and an apparatus for carrying out this process.

It is an object of the invention to provide a multicolor screen printing process which allows various colors to be printed in one operation on a succession of articles. This process is intended to minimize the drying periods between the individual printing operations and to allow a satisfactory multi-color printing to be obtained.

A further object of the invention resides in providing a simple and compact apparatus for carrying out the process.

In accordance with the invention in a multi-color screen printing process individual colors are applied by juxtaposed screen printing devices simultaneously and at positions spaced apart on one or more intermediate color carriers and from there transmitted in a continuous operation in timed juxtaposition on to articles to be printed.

The process in accordance with the invention does not apply the colors one on top of the other but side by side on the intermediate color carrier, so as to obviate the danger of smudging.

The intermediate color carrier is formed as an endless belt or a plurality of rollers. The endless belt is preferably used for printing cylindrical articles such as bottles, and the rollers for printing flat surfaces. During transfer of the color from the intermediate color carrier to the article, the two bodies are in rolling engagement with one another — this ensures a clean transfer of color.

When using rollers as intermediate color carriers, one color at a time is applied to each roller, and the rollers are successively rolled over the article. When using a belt as an intermediate color carrier, the different colors are applied to points of the belt spaced apart and subsequently the article is rolled over the belt.

The invention preferably uses a color medium having a short drying period, so that the color medium is transferred from the intermediate color carrier to the article without smudging.

According to a feature of the invention, the intermediate color carrier is provided with a rubber coating. With such an intermediate color carrier, the color medium does not form a bond. The ink becomes partially solidified while still on the intermediate ink carrier, and forms a film which during the rolling engagement between the intermediate ink carrier and the article is transferred thereto; then the color film forms a firm bond with the article.

In accordance with the invention an apparatus for carrying out the multi-color printing process is such that a plurality of screen printing frames corresponding in number to the number of colors are arranged in series and interconnected, each screen printing frame having a doctor associated therewith interconnected by means of a bar, and also rollers in contact with the screens, each roller being associated with one screen printing frame, the rollers being interconnected via a bar for mutual movement, the screen printing frames being displaceable relative to the doctors and rollers, and the rollers relative to the screen printing frames,

there being a retaining member for the article to be printed on the roller train.

The screen printing frames may be connected with a toothed rack each roller meshing with the rack by means of a gear wheel. The engagement of the gear wheels in the teeth of the bar ensures that the rollers rotate in synchronism and thus apply the color at the required point of the article accurately. Stop and drive devices are provided for the bars which interconnect the screen printing frames and the rollers. The screen printing frames are moved to ink the rollers and to transfer the ink to the article to be printed, the rollers are moved and rolled over the article; one bar at a time is displaced, while the other is locked.

A further feature of the invention is to provide an endless belt as an intermediate carrier, which is passed over two guide rollers and having its upper belt section in contact with the screen printing frame a device on its lower belt section is adapted to press the article to be printed against the belt.

The screen printing frames are adapted to be removable from the belt.

The multi-color printing is effected substantially simultaneously in one pass of the article to be printed, resulting in a very high speed of production.

Since the articles to be printed only pass once through the apparatus, faulty impressions are substantially reduced and hence manufacturing costs are also reduced.

All color impressions occur at the predetermined points. The process ensures accurate printing of a variety of articles. The apparatus for carrying out the process is simple and compact in structure and may be operated by a single operator.

Examples of the invention are shown in the drawings, in which:

FIG. 1 is a schematic view of a method of screen printing the beginning of a printing operation; for simplification printing with one color only is shown,

FIG. 2 is a similar view to FIG. 1 showing a printing operation after the intermediate ink carrier has been inked,

FIG. 3 is a similar view after ink transfer to the article to be printed,

FIG. 4 is a schematic view of an apparatus in accordance with the invention with three rollers at the beginning of a printing operation,

FIG. 5 is a schematic view of an identical apparatus after inking the rollers,

FIG. 6 shows an oval bottle as an article to be printed,

FIG. 7 is the apparatus shown in FIGS. 4 and 5 during ink transfer from the rollers onto the article to be printed,

FIG. 8 is a schematic view of the apparatus in accordance with the invention showing the toothed engagement between rollers and screen printing frames at the beginning of the printing operation,

FIG. 9 is the same apparatus after the roller have been inked,

FIG. 10 is the same apparatus showing the movement of the rollers over the article to be printed,

FIG. 11 is a schematic view of an embodiment of the invention in which an endless belt is used as intermediate ink carrier; the apparatus is shown at the beginning of a printing operation,

FIG. 12 is the same apparatus after inking of the in-

termediate ink carrier or the endless belt respectively,

FIG. 13 is the same apparatus at the beginning of the ink transfer from the endless belt onto the article to be printed.

FIGS. 1–3 show a screen printing frame **10** of conventional form. The latter contains a frame **12.** Below this frame **12** the gauze **14** is stretched. The printing form **16** is placed thereon. In the example shown, this is the letter "H." A doctor blade **18** is mounted in the frame **12.** These parts **10 – 18** and their mode of operation are of conventional construction and need not be further explained.

Below the screen printing frame **10** there is an intermediate ink carrier in the form of a roller **22.** The latter comprises a resilient core **24,** which is provided with a silicone rubber coating **26.** The article to be printed is flat and denoted by **27.**

As shown in FIG. **1,** some ink **11** is located at the right hand lower edge of the doctor **18.** To transfer this ink **11** to the roller **22** the screen printing frame **10** is displaced to the left. During this movement, the roller **22** is in rolling engagement over the underside thereof. An "H" is formed thereon, as shown in FIG. **2.** As already explained, this "H" is smudge-resistant substantially immediately after its application to the roller, and has the form of a film-like application. During the next and last operational stage the roller **22** is rolled over the article **27,** resulting in the image shown in FIG. **3.** The roller has transferred the "H" to the article **28.**

The principle of the invention has thus been explained by way of a reference to single color printing. For multi-color printing the screen printing frames, and rollers are connected in series. Three-color printing is described hereinafter. Two-color, or four-color printing is possible by means of the invention.

As an example of the article to be printed, FIG. **6** shows an oval bottle **28.** This bottle **28** has a flat part so that it cannot roll itself. Consequently rollers which can be in rolling engagement over the bottle **28** can be used an an intermediate ink carrier. FIGS. **4, 5** and **7** show a suitable apparatus. A three-colored image comprising a background **32,** a central portion **34** and a crown **36** as foreground, is printed thereon. In the apparatus the bottle **28** is retained in a holder **38.** The rollers **22** move along the bottle. A bar **40** carries the rollers **22** at suitable spacings. The doctors **18** are mounted on another bar **42.** To make the three impressions **32, 34** and **36** the three screen printing frames have different printing forms **46, 48** and **50.**

FIG. **4** shows the inoperative — or starting position. During the first stage of the operation the screen printing frames **10** are mutually shifted to the left. Their undersides slide over the rollers **22.** Since these are retained by the bar **40,** the rollers are in rolling engagement with the undersides of the screen printing frames **10.** The ink is transferred to the rollers. This stage of the operation is shown in FIG. **5.**

In the next operating stage the bar **40** is released. At the same time the screen printing frames **10** are lifted off the rollers **22,** or the rollers are lowered. These movements may be carried out by any suitable means well-known in the printing art, such as scissor linkages, cam drives, chain drives, or other similar, well-known arrangements. The rollers **22** are subsequently moved to the left. They move along the underside of the article **28** and off of it, as seen in FIG. **7.** Each roller transfers its ink application to the article **28.** This image is shown in FIG. **6.** The screen printing frames **10** have here been moved towards the right and assume their original position shown in FIG. **4.**

FIGS. **8 – 10** correspond in principle to FIGS. **4, 5** and **7.** These three figures show the synchronizing means for the individual elements. These ensure that the relative positions between screen printing frames and the rollers on the one hand and the rollers relative to the article to be printed on the other hand are maintained accurately. This in turn ensures that the colors are impressed on the article at the points required.

In this example the three screen printing frames **10** are mounted on a bar **41.** On its underside this bar has a rack **54.** Each roller **22** carries a gear wheel **56** on its end face. The gear wheels **56** mesh with the rack **54.** In this schematic view a stop **58** is also provided. This stop **58** locks the bar **40** and prevents the rollers **22** from being engaged when the screen printing frames **10** are displaced. Stop **58** can be controlled by appropriate motor means **59.**

FIG. **8** shows the start or original position. Each screen printing frame **10** applies a different color ink. Subsequently the bar **41** is displaced to the left by appropriate motor means **43.** This is indicated by the arrow in FIG. **9.** The rollers **22** or the bar **40** are unable to follow this movement, since the stop **58** presses against the end of the bar **40.** The engagement between rack **54** and gear wheels **56** causes the rollers **22** to be in rolling engagement over the underside of the screen printing frames **10.** One color at a time is transferred to each roller.

During the next stage of the operation the screen printing frames **10** with the doctors **18** are lifted upwards by appropriate motor means **45.** This is indicated by the arrows in FIG. **10.** Stop **58** is simultaneously pulled away downward. The bar **40** is then displaced to the left in the direction of the arrow by any appropriate mechanism, such as **47.** It moves in a direction towards the article **28** to be printed, as shown in FIGS. **4, 5** and **7.** The rollers **22** are in rolling engagement with the surface of the article and transfer their ink thereto.

FIGS. **11 – 13** show an embodiment used for applying printing to a curved surface, in which the article **29** to be printed is cylindrical and adapted to be in rolling engagement on an intermediate colored ink carrier. An endless belt **62** is passed around two guide rollers **64.** The article **29** to be printed, such as cylindrical spray container, is supported on two supporting rollers **66.** A pressure application roller **68,** which is held by a spring element **70,** presses the belt **62** resiliently against the article **29** to be printed. There is a cleaning roller **72** rests again-t the belt **62** downstream of the article.

FIG. **11** again shows the commencing or original position. The screen printing frames **10** are filled with ink. The doctors **18** are moved to the right in the direction of the arrows and transfer the ink to the belt **62.** Subsequently, the screen printing frames **10** with the doctors **18** are raised. FIG. **12** shows the resulting images. Three ink applications **74, 76, 78** are located on the belt **62.** The belt is now set in motion in a clockwise direction. This is shown in FIG. **13,** which portrays the instant at which the first color application **78** arrives at the article **29** and is applied thereto. It has already been explained that the ink application, due to the silicone coating, adheres only loosely to the belt **62** and may be drawn off like a film. This now takes place onto the article **29** to be printed. This article receives the film-like

ink application and unwinds it thereon. When the article **29** has rotated once through 360°, it has arrived at the next ink application position. This film-like ink application is also applied by rolling engagement over the article **29**. The same occurs with the next and last ink application.

In exceptional cases, should the ink adhere to the belt **62**, then it is removed by the cleaning roller **72**, which contacts the surface of belt **62** to remove excess ink from the belt surface by scraping, absorption, or other suitable means.

The above description has shown that the screen printing technique used makes possible a thick, covering ink application. The intermediate ink carrier further ensures that the different ink applications can be applied exactly one over the other or in one another onto the article to be printed. This is due to the fact that the article has to be passed only once through the apparatus, the accurate overprinting being ensured by the mechanism of the apparatus itself.

In addition to the printing of containers, tins, flasks etc., the process of the invention and the apparatus, are suitable for all purposes in which articles of all kinds have to be printed in several colors. A further field of application is printing on paper and cardboard, such as posters and display articles. In this case difficulties have hitherto been encountered when a large area of paper, such as a poster, had to be passed several times through the printing apparatus. It frequently occurred that the second, third or fourth application was displaced. Printing in accordance with the invention prevents these faults from occurring, since the poster is printed in several colors in one passage through the apparatus.

I claim:

1. A screen printing apparatus for printing articles

comprising:

a plurality of screen printing means, each screen printing means adapted for using a different color and indicia from that used by the others;

a plurality of intermediate color carriers, one color carrier for each screen printing means, said color carriers positioned beneath the screen printing means and in cooperative relationship therewith for receiving the indicia;

a toothed support member for said plurality of screen printing means;

a gear member arranged on each color carrier and operatively connected thereto, each of said color carriers comprising a silicone rubber coated roller, each gear member meshing with the toothed support member;

means for moving the toothed support member relative to the rollers to impart the color indicia from each of said plurality of screen printing means onto its corresponding roller;

stop means for selectively preventing movement of the rollers with said toothed support member and permitting a relative rolling engagement between the rollers and the screen printing means as the rollers receive their respective indicia;

means for lifting the screen printing means upward out of engagement with the respective rollers, and

means for moving the rollers relative to said toothed support member with engagement between the toothed support member and the roller gears, whereby the rollers can respectively impart their color indicia upon the article by a rolling engagement with said article.

* * * * *