J. E. STAFFORD, W. D. INGRAM & H. C. GORDON.

REFRIGERATOR.

APPLICATION FILED DEC. 24, 1915.

1,231,088. Patented June 26, 1917.

2 SHEETS—SHEET 1.

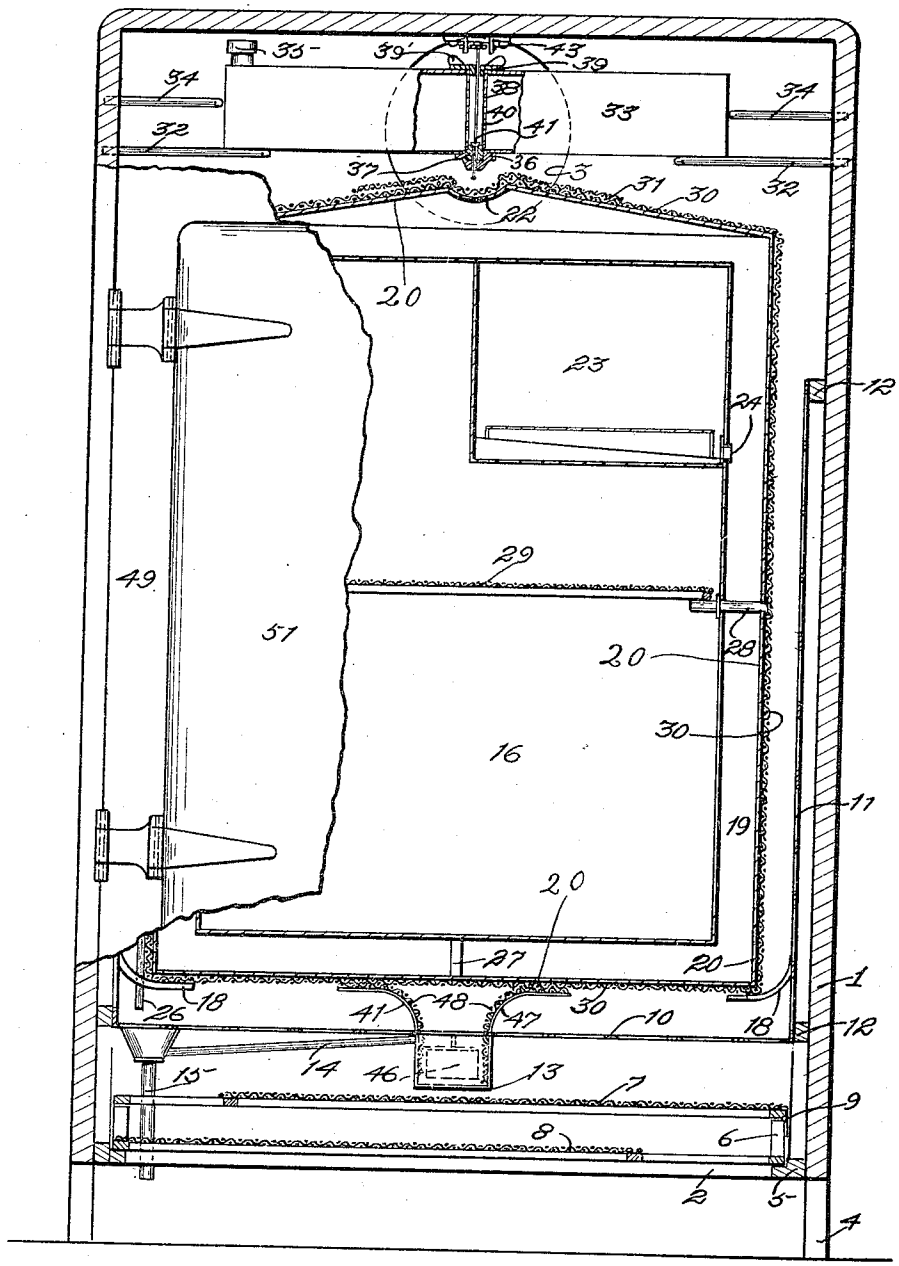

Fig. 1.

WITNESS

Wm. F. Drew

INVENTORS

J. E. Stafford.
W. D. Ingram
H. C. Gordon.

BY Cooper & Totten.

ATTORNEYS.

THE NORRIS PETERS CO., PHOTO-LITHO., WASHINGTON, D. C.

J. E. STAFFORD, W. D. INGRAM & H. C. GORDON.

REFRIGERATOR.

APPLICATION FILED DEC. 24, 1915.

1,231,088.

Patented June 26, 1917.

2 SHEETS—SHEET 2.

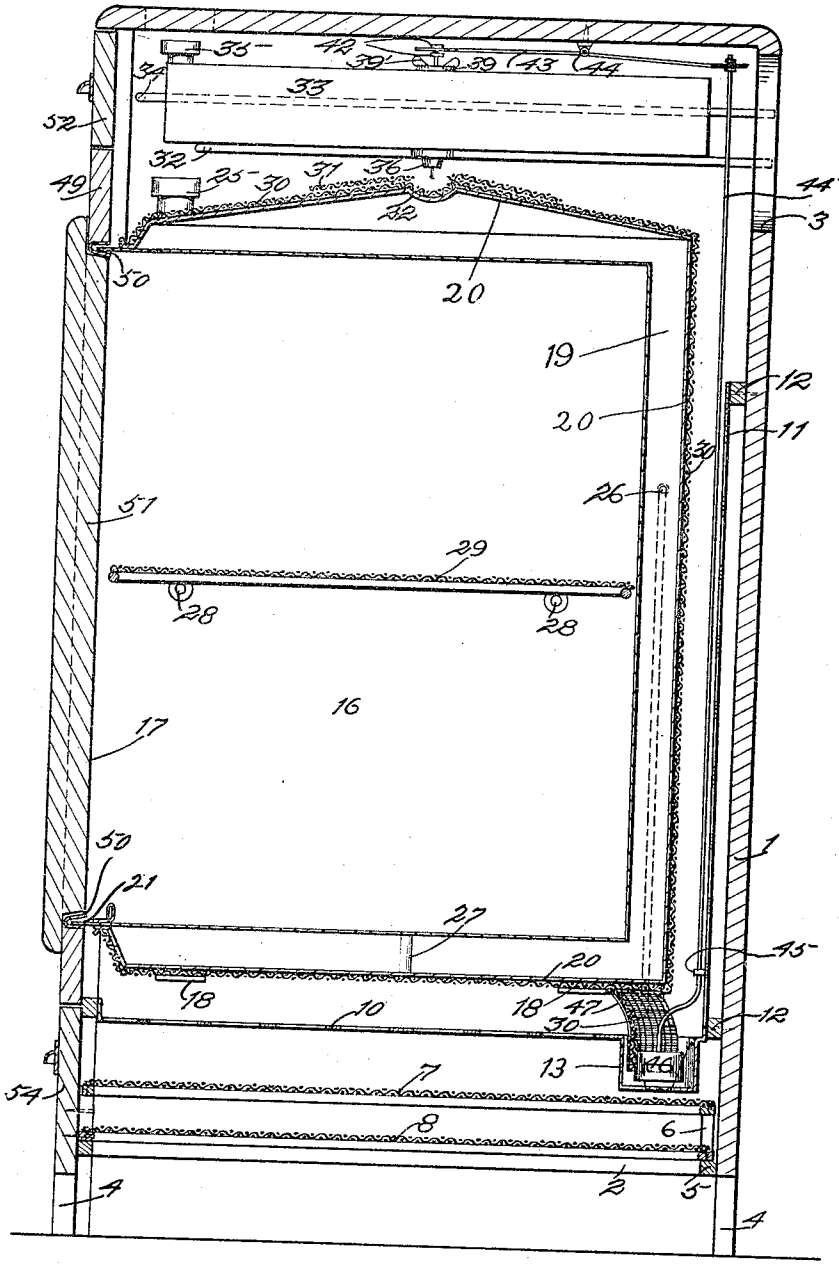

Fig. 2.

WITNESS

Wm. F. Drew

BY

INVENTORS

J. E. Stafford

W. D. Ingram

H. C. Gordon.

Cowper & Totten.

ATTORNEYS.

THE NORRIS PETERS CO., PHOTO-LITHO., WASHINGTON, D. C.

UNITED STATES PATENT OFFICE.

JOHN E. STAFFORD, WILLIAM D. INGRAM, AND HARRY C. GORDON, OF LINCOLN, CALIFORNIA.

REFRIGERATOR.

1,231,088. Specification of Letters Patent. Patented June 26, 1917.

Application filed December 24, 1915. Serial No. 68,485.

To all whom it may concern:

Be it known that we, JOHN E. STAFFORD, WILLIAM D. INGRAM, and HARRY C. GORDON, citizens of the United States, residing at Lincoln, in the county of Placer and State of California, have invented certain new and useful Improvements in Refrigerators, of which the following is a specification.

The present invention relates to improvements in refrigerators, and more particularly to that type of apparatus wherein the refrigeration or cooling is accomplished by evaporation.

The invention has for its principal objects to provide an apparatus wherein the supply of evaporation liquid from a reservoir is automatically controlled in accordance with the saturation of the capillary medium, one wherein there is provided means for insuring an even supply of evaporation fluid to all sides of the chamber surrounded by the capillary medium regardless of whether the apparatus sets at a slight angle or is in a level position. To provide an apparatus wherein the food chamber is removable from the casing to enable the same to be easily repaired and cleaned, and one wherein the food chamber is surrounded by a fluid containing chamber which provides a cooling means for the food chamber for a considerable time after the flow of the evaporation fluid has been shut off.

With the above mentioned and other objects in view, the invention consists in the novel construction and combination of parts hereinafter described, illustrated in the accompanying drawings, and pointed out in the claims hereto appended; it being understood that various changes in the proportion, form, size and minor details of construction within the scope of the claims may be resorted to without departing from the spirit or sacrificing any of the advantages of the invention.

To more fully comprehend the invention, reference is directed to the accompanying drawings, wherein—

Figure 1 is a view in front elevation, partly in section, of a refrigerator, disclosing an embodiment of our invention.

Fig. 2 is a vertical sectional view taken on line 2—2 of Fig. 1.

Referring more particularly to the several views of the drawings wherein like characters of reference designate corresponding parts, 1 indicates the outer wall of the refrigerator, open at its base as at 2, providing a draft opening, and formed with a draft opening 3 in the upper portion of the rear wall. The refrigerator is supported by legs 4 and is divided on its interior into several compartments.

Removably supported on a ledge 5 surrounding the open base 2 is a drawer frame 6 mounting the sieve bottom trays 7 and 8, preferably arranged in staggered relation with reference to the longitudinal length of the refrigerator in order that the air passing through the refrigerator will be forced to pass over and through the trays before exhausting from the opening 3. The upper tray 7 is hinged as at 9 to one end of the frame 6 to permit of an easy access to the lower tray 8, and said trays are adapted to contain any suitable dehydrating chemical or compound.

Extending across the refrigerator above the trays 7 and 8 is a perforated partition 10 upturned at its side and rear walls providing perforated walls 11 which extend upwardly over the inner face of the walls 1 and are spaced therefrom by the spacing members 12. The walls 11 terminate short of the top of the refrigerator and the perforations therein provide a means for effectively directing the dehydrated air after passing over and through the trays 7 and 8 against the evaporation surfaces of the absorbent material hereinafter described.

A sump 13 is formed in the perforated partition 10 and connecting with the upper edge thereof is an overflow pipe 14 leading to an outlet or drain pipe 15 extending below the trays 7 and 8 and opening beneath the refrigerator.

A food container 16 having an open front 17 is removably positioned within the refrigerator, and the same is supported by arms 18 extending from the inner walls 11 adjacent their base. A fluid chamber 19 surrounds the top, bottom and three side walls of said food container, and the outer wall 20 forming said chamber 19 terminates short of the front edge of the wall of said food container surrounding the opening 17 thereof, thereby providing an extension 21 surrounding said opening. The top wall member 20 or roof of the chamber 19 is conical in form and at its apex is provided with a circular depression 22. A suitable

compartment 23 is provided in the upper portion of the food container and the same is adapted for the reception of ice, the drip therefrom passing into the chamber 19 through a passage 24 leading thereinto. The chamber may be supplied with water through an inlet 25 in the roof thereof, and an overflow connection 26 leads from the chamber at a point below the passage 24 and communicates with the outlet 15.

Suitable members 27 and 28 provide a rigid connection between the walls of the chamber 19, and the members 28 project into the interior of the food container and provide a support for the shelf 29.

A suitable material 30 covers the outer wall 20 of the fluid chamber 19 and the same may consist of any soft cloth, wicking, or other well known structure for absorbing liquids and presenting a large surface for evaporation. A suitable material 31, preferably of wicking surrounds the depression 22 and by capillary attraction gradually feeds water contained in the depression to the evaporating surface 30.

Resting on supports 32 extending inwardly from the walls of the refrigerator adjacent the top thereof is a suitable reservoir 33, maintained in position by the guides 34. The reservoir is provided with a filler opening 35 and a suitable fluid outlet. The fluid outlet is surrounded by a tubular ferrule 36 threaded on its interior to receive the exteriorly threaded tubular valve seat 37 carried at the lower end of a tubular perforated valve casing 38 which is removably positioned within the reservoir. An annular flange 39 having finger pieces 39′ thereon is formed on the upper portion of the casing 38 and is adapted to provide a fluid tight joint with the top of the reservoir when the casing is positioned therein, and the valve seat and ferrule are forced tightly together. A reciprocating valve stem 40 carrying the valve 41 for seating on the upper surface of the valve seat 37 is mounted in the casing 38 with the lower end thereof projecting through the tubular ferrule 36, and the upper end projecting above the reservoir and provided with the laterally extending spaced heads 42. The valve is of such construction that the same may be removed in one piece from the reservoir when the valve is in need of repairs, adjustment or cleaning. A lever 43 fulcrumed as at 44 is bifurcated at its forward end to be received between the spaced heads 42 of the valve stem, and the same connects at its opposite end with the upper end of a stem or rod 44′ which is mounted to reciprocate in a guide 45 and carries at its lower end a float 46 which is positioned in the sump 13.

Suitable spring arms 47 extend upwardly from the sump 13 and contact with the under or bottom wall 20 and said arms are covered on one face with a capillary material 48 such as wicking.

A suitable hinged front 49 closes the front of the refrigerator surrounding the open portion 17 of the food chamber and said front is provided with an opening of the size of said open portion 17 to permit of access thereto; the hinged front when swung to open position permitting the removal of the food container 16 from the refrigerator. A suitable metallic spring packing 50 substantially U-shaped in cross section surrounds the opening in the hinged front 49 and in the channel of said packing, when said front is in closed position, as in Fig. 2, is adapted to be received the portion 21 of the food container 16. A hinged door 51 carried by the front 49 closes the opening therein and closes the open portion of the food container 16, and said door when closed contacts with the packing 50 which provides a tight joint around the same.

A removable closure 52 rests on the upper edge of the hinged front 49 and closes the opening through which the reservoir is withdrawn from the refrigerator. A drawer front 54 is secured to the front end of the drawer frame 6 and provides a means for withdrawing the drawer frame 6 and trays 7 and 8 from the refrigerator when desired.

The reservoir 33 being filled with water, the same will pass therefrom through the valve controlled opening and will be received in the depression 22 which insures an even distribution thereof whether the refrigerator is level or is resting at an angle. The water is drawn from the depression by the capillary mediums 30 and 31 and saturates the covering 30 surrounding the food container 16 and is evaporated by the circulation of the air around the container. When the material 30 becomes excessively saturated the excess water is drawn by the material 48 on the spring arms 47 into the sump 13 and as it collects therein the float 46 is raised, seating the valve 41 to shut off the supply from the reservoir. As the water now saturating the material 30 is evaporated, that in the sump 13 is supplied through capillary attraction to the material 30 and when the level of the water in the sump is reduced to a certain point, the dropping of the float 46 unseats the valve 41 and permits water to flow from the reservoir 33. In this manner the material 30 will be maintained at an approximately uniform saturation at all times and under all conditions, and all of the water of evaporation will be utilized.

Having thus described our invention, what we claim as new and desire to protect by Letters Patent is:—

1. A refrigerator comprising an outer casing, an inner casing within the outer casing, a porous material covering the inner

casing, means for supplying fluid to the porous material, and means for automatically controlling the supply of fluid to said porous material, said means being operated in accordance with the degree of saturation of said porous material.

2. A refrigerator comprising an outer casing, an inner casing within the outer casing and spaced therefrom, a porous absorbent material covering the inner casing, means for supplying fluid to the upper surface of said porous absorbent material for flowing by capillary attraction over the surface thereof, a valve controlling the fluid supply to said porous material, a closed sump for receiving the excess fluid supplied to said porous material, and a float in said sump and actuated by the level of the liquid therein for opening and closing said valve.

3. A refrigerator comprising an outer casing, an inner casing within the outer casing and spaced therefrom, a porous material covering the inner casing, a reservoir for supplying fluid to the porous material, a valve controlling the supply from said reservoir, a sump for receiving the excess fluid supplied to said porous material, a float in said sump and connected with said valve and actuated by the rise of fluid in said sump for closing said valve, and capillary means within said sump and contacting with said porous material for withdrawing the water from said sump and supplying the same to said porous material.

4. A refrigerator comprising a casing, a porous material covering said casing, means for supplying fluid to said porous material, and valve controlled means for automatically controlling the supply of fluid from said supply to said porous material, the operation of said last mentioned means being dependent upon the degree of saturation of said porous material.

5. A refrigerator comprising an outer casing, a food container removably mounted therein, a porous material covering said food container, means for supplying fluid to the porous material at the top of said food container, a sump for receiving the excess fluid supplied to said porous material, and a capillary medium extending from within the sump and contacting with said porous material for supplying the fluid contained in said sump to said porous material.

6. A refrigerator comprising an outer casing, a food container removably mounted therein, a porous material covering said food container, means for supplying fluid to the porous material at the top of said food container, a sump for receiving the excess fluid supplied to said porous material, a capillary medium extending from within the sump and contacting with said porous material for supplying the fluid contained in said sump to said porous material, and spring means for supporting said capillary medium and for maintaining the same in contact with said porous material.

7. A refrigerator comprising an outer casing, a food container therein, a porous material around said container, a reservoir above said container for supplying fluid to the porous material, a valve removably mounted in said reservoir for controlling the fluid supply therefrom, and means automatically operated in accordance with the degree of saturation of said porous material for actuating said valve.

In testimony whereof we have signed our names to this specification in the presence of two subscribing witnesses.

JOHN E. STAFFORD.
WILLIAM D. INGRAM.
HARRY C. GORDON.

Witnesses:
JAMES D. MENDELT,
JAKE MOOSE.

Copies of this patent may be obtained for five cents each, by addressing the "Commissioner of Patents, Washington, D. C."