United States Patent [19]

Akin

[11] **3,730,321**

[45] **May 1, 1973**

[54] **COIN OPERATED IRONING BOARD WITH SAFETY AND RETURN FEATURES**

[75] Inventor: **Minnie Izetta Akin,** Levelland, Tex.

[73] Assignee: **Penny Enterprises, Ltd.,** Levelland, Tex.

[22] Filed: **Jan. 21, 1971**

[21] Appl. No.: **108,423**

[52] **U.S. Cl.** .....**194/9 T**

[51] **Int. Cl.**.....**G07f 5/10**

[58] **Field of Search** .....194/9, 9 T, 1, 10, 194/11, 16, 51, 59, 65, 3

[56] **References Cited**

UNITED STATES PATENTS

3,185,278 5/1965 Miller et al. .....194/1 A

3,220,528 11/1965 Friedrich.....194/2

Primary Examiner—Stanley H. Tollberg

Attorney—Ely Silverman

[57] **ABSTRACT**

Apparatus and process providing one or more electrically powered implements on a short term rental basis for use in a limited area by retaining such implement or implements in an enclosure therefor, opening the enclosure and providing power to actuate the implements on insertion of a coin into a coin collector assembly and then permitting use of one or more said implements for a predetermined time and, after such use of one or more of said implements, discontinuing power connection to the implements, and, after the implements are returned to their proper place and the enclosure is closed, dispensing a coin to the user of the implements.

8 Claims, 14 Drawing Figures

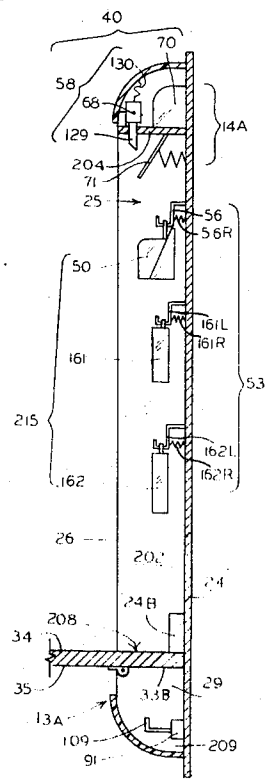

FIG. 1

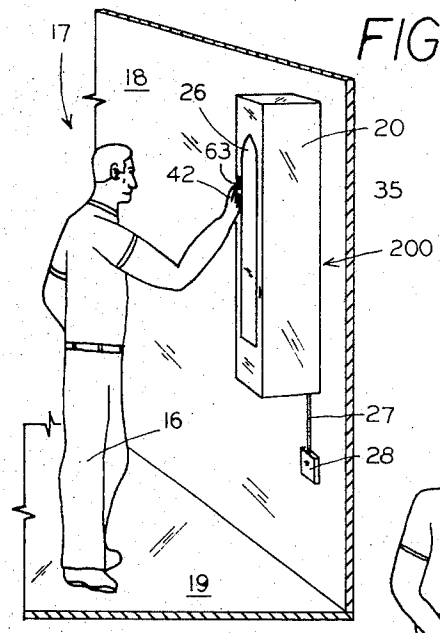

FIG. 2

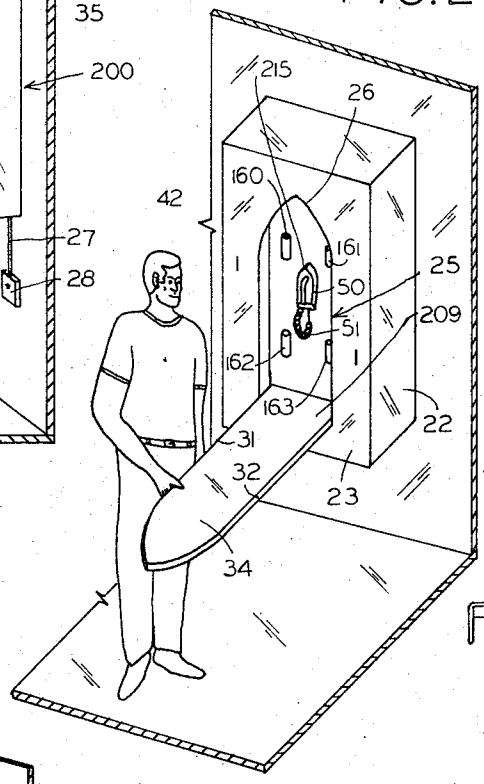

FIG. 3

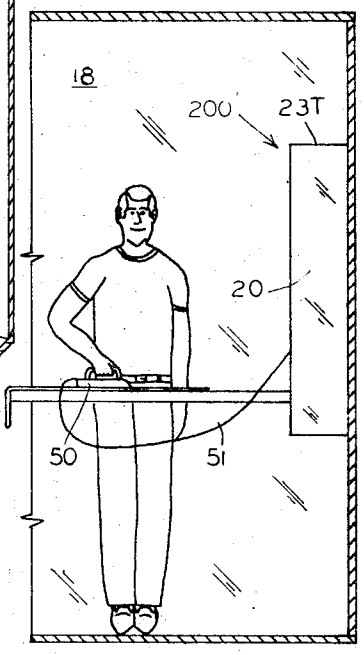

FIG. 4

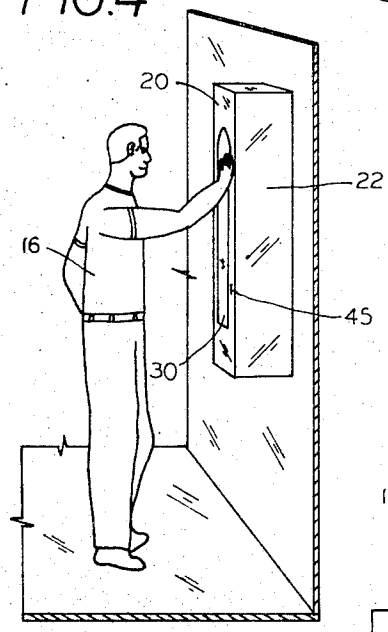

FIG. 5

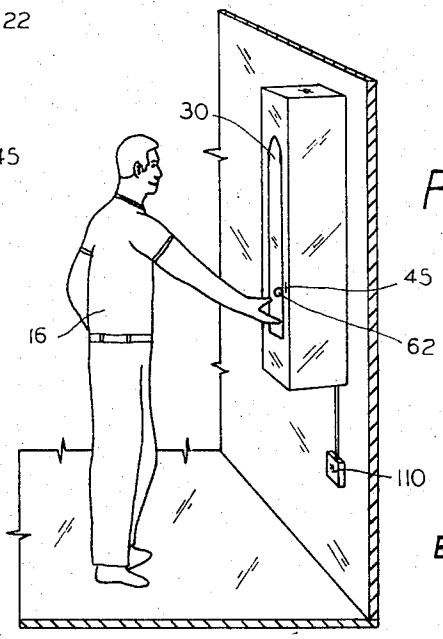

INVENTORS
MINNIE IZETTA AKIN
BY
Ely Silverman
ATTORNEY

FIG. 6

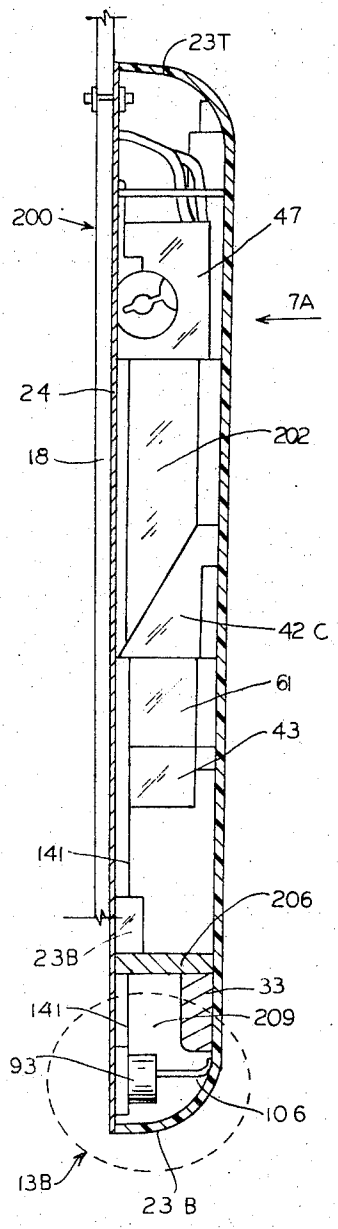

FIG. 7

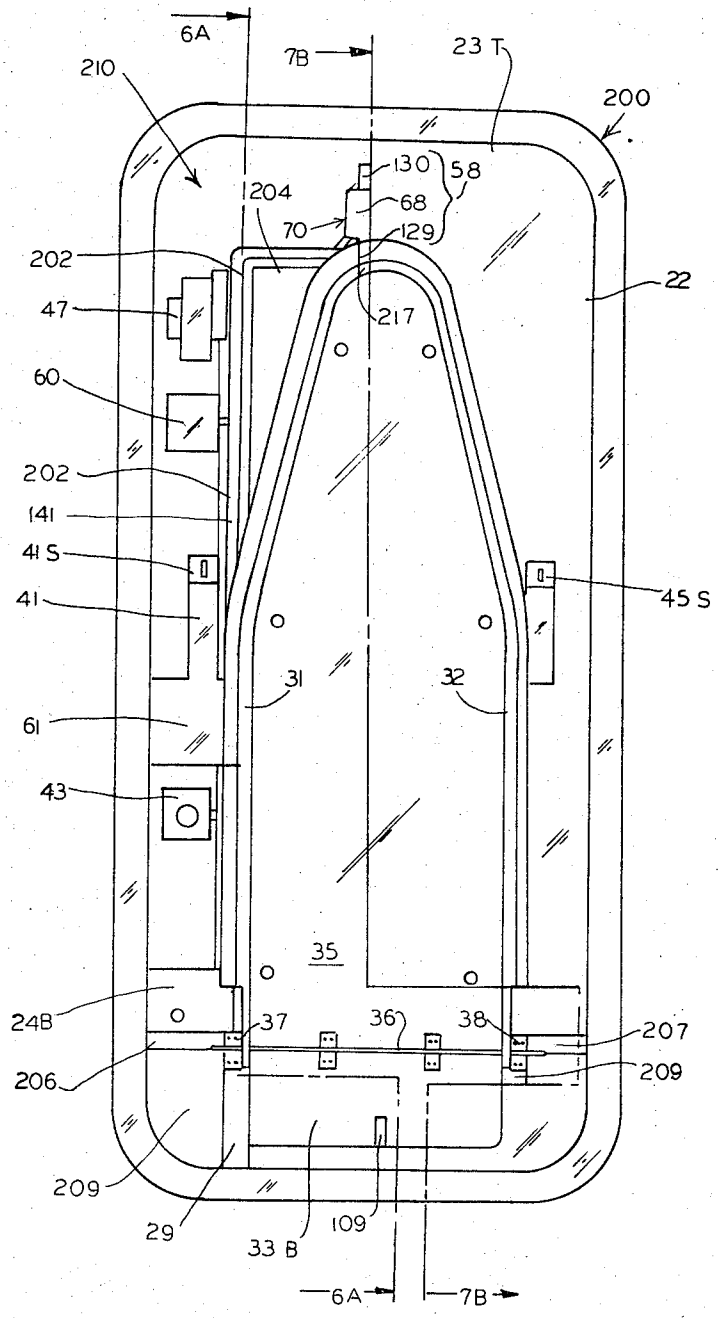

INVENTORS
MINNIE IZETTA AKIN
BY
Ely Silverman
ATTORNEY

FIG. 8

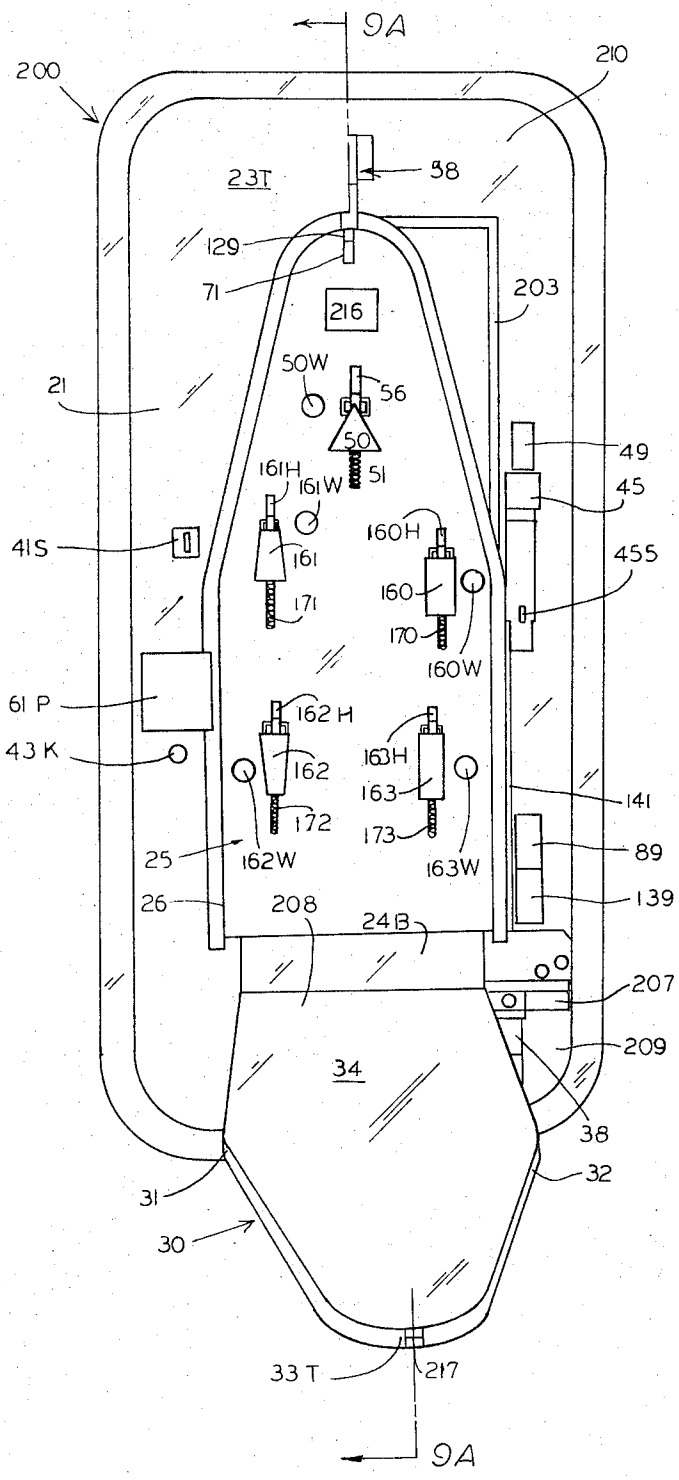

FIG. 9

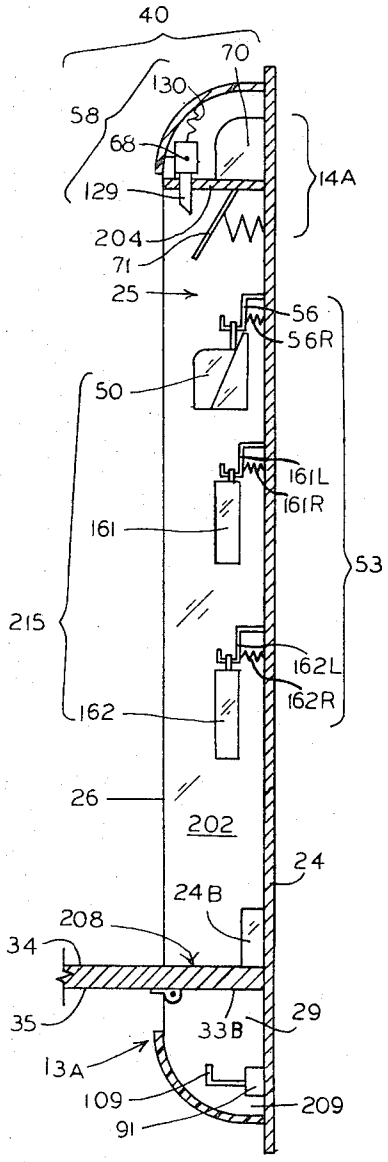

INVENTORS
MINNIE IZETTA AKIN
BY
Ely Silverman
ATTORNEY

FIG. 10

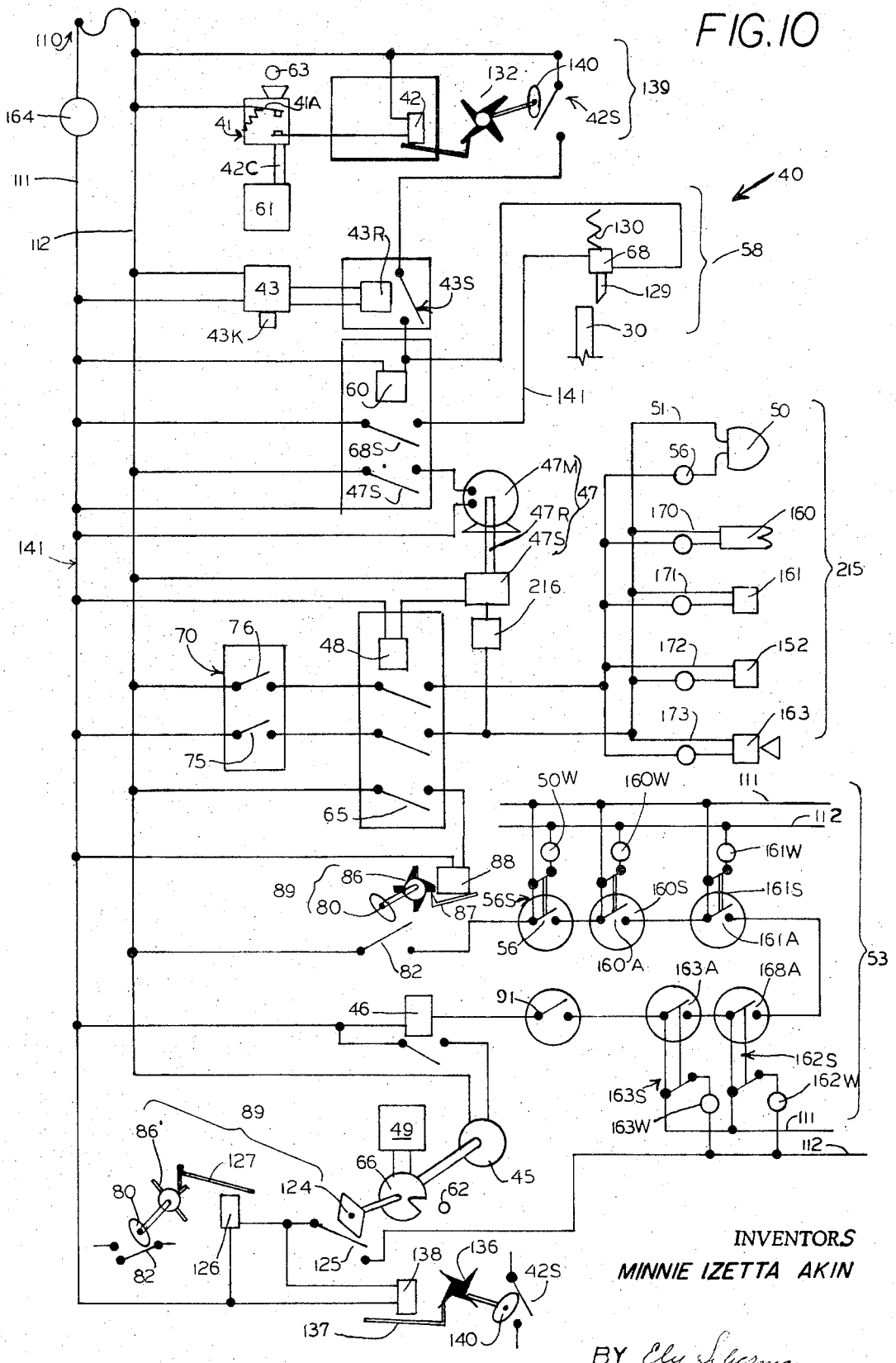

INVENTORS
MINNIE IZETTA AKIN

BY Ely Silverman
ATTORNEY

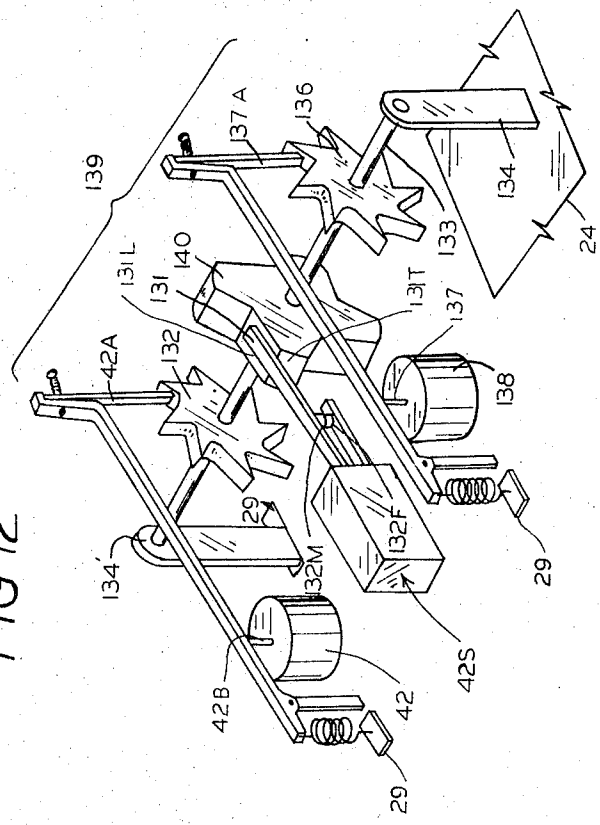

FIG 12

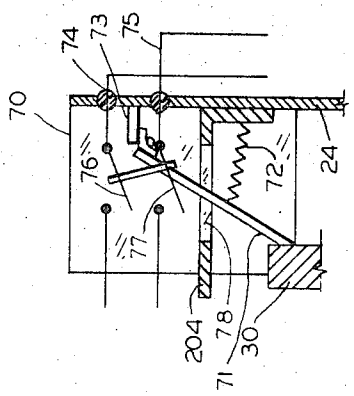

FIG. 14

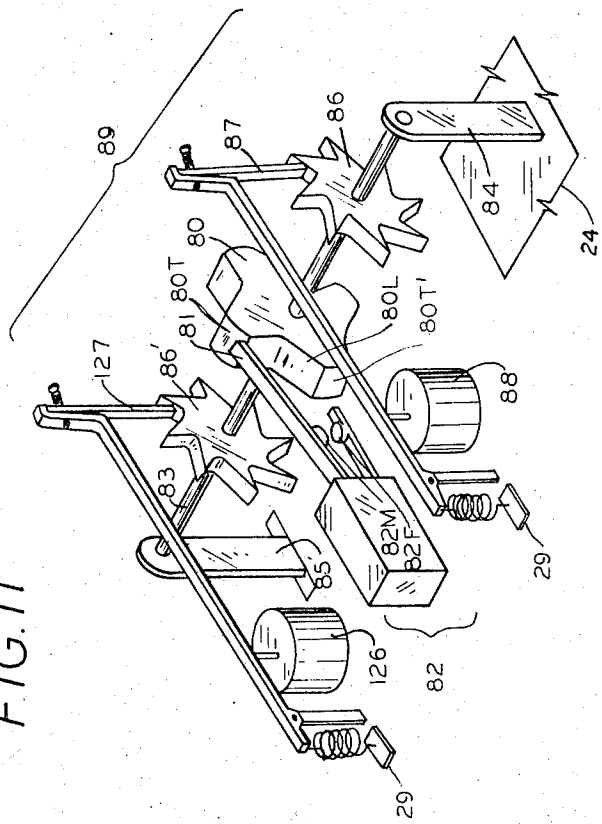

FIG. 11

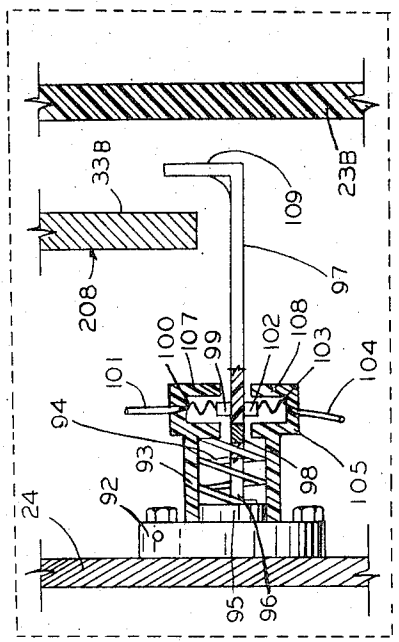

FIG. 13

INVENTORS
MINNIE IZETTA AKIN
BY
Ely Silverman
ATTORNEY

COIN OPERATED IRONING BOARD WITH SAFETY AND RETURN FEATURES

BACKGROUND OF THE INVENTION

1. The Field of the Invention

The field of this invention is ironing tables with means for performing other functions and check controlled apparatus for delivering articles and for preventing fraud against the apparatus.

2. Description of the Prior Art

While prior art has provided coin operated dispensing machines for electrically powered apparatus, there has been no provision for obtaining proper return of the implements after their use to the enclosure from which dispensed.

SUMMARY OF THE INVENTION

The purpose of this invention is to elicit the participation of the user of the apparatus in the repeated use of the apparatuses by different operators through a reward procedure. By this invention each of such apparatuses and the circuits therefor is returned to a position at which it is electrically safe as well as avoiding loss of and damage to such dispensed apparatus, and safeguards against improper operation of the reward system are provided. One apparatus of the invention comprises an ironing board and case unit, a coin collecting and control system for release of the ironing board and a coin dispensing system and safety interlock units. The coin dispensing system is actuated and controlled to achieve the cooperation of each operator in preparing the apparatus for use by the following operator or customer.

BRIEF DESCRIPTION OF THE DRAWINGS

FIGS. 1 through 5 illustrate a typical sequence of operation of the apparatus 200. FIG. 1 shows the operator putting money 63 into the coin collecting assembly 42 of apparatus 200; FIG. 2 shows the operator with the board open and implements in the chamber 25; FIG. 3 shows the operator using an implement 50; FIG. 4 shows the operator returning the board 30 to its position in the case 20; and FIG. 5 shows the operator 16 with the coin 62 returned to him by the coin dispensing assembly 45.

FIG. 6 is a sectional view taken along the direction of the arrows 6A—6A at section 6A—6A of FIG. 7.

FIG. 7 is a frontal view, partly broken away, of the apparatus 200 taken along the direction of the arrow 7A of FIG. 6; apparatus 200 here is shown partially away along the section shown by the broken line 7B—7B with the walls of the assembly 20 removed to the left of broken line 7B—7B to show structures within the chamber 210. Apparatus 20 is here shown with board 30 in its closed position, as in FIG. 1.

FIG. 8 is a frontal view of the apparatus 200 taken along the direction of the length of the ironing board in its open position, as in FIG. 2. The apparatus 200 here is shown partly broken away along the vertical section shown by line 8B—8B, with the casing assembly portion to the right of the section 8B—8B removed to show structure within the chamber 210 and otherwise hidden by such wall structure.

FIG. 9 is a sectional view taken along the direction of the arrow 9A of FIG. 8 and taken through the plane 8B—8B of FIG. 8.

FIG. 10 is a diagrammatic representation of the electrical connections and circuits of the apparatus 200 shown for the greater part with the switches thereof in their open position; the normally open switches being shown in their normally open position in this figure, although the normally closed switches tied to the normally open switches are shown in their closed position.

FIG. 11 is a diagrammatic isometric view, somewhat expanded, of the stepping relay assembly 89 with the contact points 82M and 82F thereof in their open position.

FIG. 12 is a diagrammatic isometric view of the stepping relay assembly 139 with the contact points 132M and 132F thereof shown in their closed position.

FIG. 13 is an enlarged diagrammatic vertical longitudinal cross-section view of the assembly 91 and nearby structures in the position thereof between that of FIG. 6 and that of FIG. 9 but somewhat closer to FIG. 6. FIG. 13 shows generally the parts in zone 13A of FIG. 6 but at a position of parts immediately prior to the board 30 reaching its fully closed position as shown in FIG. 6 and 4; the position here shown (in FIG. 13) is when the board 30 is not yet closed as in FIGS. 4 and 6 but is nearing the position at which it would be closed.

FIG. 14 is an enlarged view of zone 14A of FIG. 9 to show some details of the switching assembly 70 diagrammatically.

FIGS. 8 and 9 show the elements of implement assembly 215 diagrammatically because of the space limitations for the referent numerals: FIGS. 6, 7, 8 and 9 are otherwise generally to scale. All other figures are diagrammatic representations.

The figures to scale illustrate an embodiment 200 that is, from bottom of panel 24 to its top, 37 inches high and 18 inches wide from side to side of panel 24, and 4 inches thick from back of panel 24 to front of the casing assembly.

DESCRIPTION OF THE PREFERRED EMBODIMENT

The apparatus 200 of this invention comprises, in operative combination, a case subassembly 20, a board subassembly 30, a control subassembly 40 and an implement subassembly 215. The assembly 20 is firmly affixed to a vertical wall as 18 in room 17 for access thereto and use thereof by an operator or customer 16.

The case subassembly 20 comprises an inner implement chamber 25 and an outer case chamber 210. The outer case bounds chamber 210 and comprises a left side face 21, a top surface 23T and a bottom face 23B, a right side face 22, a front face 23 and a rear panel 24. Each of the faces 21, 23B, 23T, 22, 24 are imperforate in general: the front face 23 is provided with an opening 26 for an implement chamber 25. Face 21 is provided with a slot 41S for inserting coins, and a removable panel 61P for removing coins from coin collector chamber 61 and with a key hole 43H for actuating key assembly 43, face 23 has a slot 45S for dispensing of coin. The board 30 serves to close the implement chamber 25 when that board is in its closed position. Panel 24 is ribbed to form a rigid casing base or frame 29.

The board subassembly 30 comprises a conventional ironing board with, as shown in its open position in FIGS. 2 and 8 and in closed position shown in FIGS. 1 and 7, a left edge 31, a right edge 32, a base 33B, a top

surface 34, a bottom surface 35 and a tip 33T. The bottom surface 35 of the board 30 is firmly attached in the neighborhood of—but spaced away from—its base end 33B to a rigid straight pivot rod 36 at bottom of opening 26 immediately to the rear of front face wall portion 23B. The rod 36 is pivotally attached at its ends to the casing assembly 20 near to the bottom of the opening 26 at a left hinge subassembly 37 and a right hinge subassembly 38: assemblies 37 and 38 are firmly attached to casing frame 29 and provide for pivotally supporting the board assembly 30 so that it smoothly yet firmly and rotatably fits within the opening 26 and, in its closed position fills the opening 26 and its end 33B contacts arm 109 of relay 91 and closed the circuit from elements 101 to 104 as below described. The board 30 pivots on rod 36 from its vertical (in FIGS. 1 and 7) to its horizontal position (of FIGS. 2 and 8) and, in its open position, the rear end 33B thereof is held from upward movement by a rigid board 24B that extends horizontally of opening 26 and chamber 25 and is firmly attached to the rear wall panel 24. Its wooden composition absorbs shocks from any dropped metal implement without damage thereto or therefrom. Board 24B is 2 inches × 4 inches in size.

The implement chamber 25 is bounded by and comprises the front face 201 of the rear casing wall 24, a vertical left wall 202, a vertical right wall 203 and a horizontal top wall 204, walls 202 and 203 join wall 204. A left casing shoulder 206 extends at level of top of board 30 in its open position leftward from the left hand edge 31 of the board 30 as shown in FIG. 7. A right shoulder 207 extends rightward from the right hand edge 32 of the board 30 as shown in FIGS. 8 and 9. Walls 202–204, 206 and 207 extend from wall 24 to rear of wall 23B or 23T, as shown.

The board 30, when in its open position, shown in FIGS. 4 and 7 together with the shoulders 206 and 207 and faces 21, 22 and 23B, serve to define and bound a chamber portion 209 of chamber 210 located below the implement chamber 25 and to which the operator or customer 16 has no access. The right hand edge 32 and the left hand edge 31 of the board 30 and the rear portion 208 of the top surface 34 of the board 30 forms, with the shoulders 206 and 207 and locking board 24B, a partition that extends completely across the bottom of chamber 25: such partition, as shown in FIG. 9, forms the top of a safety switch chamber 209 wherein the board close sensing switch assembly 91 is located. The board 30 and walls 201–204 and shoulders 206 and 207 completely separate the implement chamber 25 from the outer case chamber 210 bounded by the front face 23, the left face 21, the right face 21 and the rear wall 24 and, when closed, the board 30 above rod 36. The portion of chamber 210 peripheral to the implement chamber 25 contains and its walls support electric circuit elements shown in FIG. 6 through 14 while the implements as 50 and 160–164 are supported in and exposed in and made available in the chamber 25 to the operator or customer, 16.

In its closed position board 30 is located at the front of chamber 25 and completely closes opening 26 thereof and, with the wall elements 202, 203, 204 and board portion 208 form an implement chamber 25 located above the level of board surface 34 in the open position of board 30. All implements of the implement subassembly 215 are removably located within the chamber 25.

The board 30 is held in its closed position by board trigger release assembly 58. Assembly 58 comprises latching spring-loaded plunger 129 that is bevelled downwardly and inwardly and that is longitudinally movable in a solenoid 68 (which solenoid is firmly attached to casing wall 23) and resiliently urged into opening 26 by a spring 128; actuation of coil 68 withdraws plunger 129 into coil 68 and removes the plunger from contact with the edge of board 30 and permits the board 30, urged by spring 72 and arm 71, to open to position of FIG. 2 and concurrently that other circuits be closed, as diagrammed in FIG. 14.

Control assembly 40, shown in FIG. 10, comprises a coin collecter subassembly 41, a verifying subassembly 43, a coin dispensing subassembly 45, a timer subassembly 47, a powered implement assembly 215, an implement return sensing subassembly 53 and board release assembly 58. The subassemblies are in operative combination as herebelow described joined by cables as 141.

Except for indicator lights 50 W and 160 W–164 W the switches shown in FIG. 10 are springloaded to be normally open and are so shown for clarity of presentation: these switches are closed in sequences and combinations in the operating of the circuit as herein below described.

The coin collecter assembly 41 is a standard coin actuated mechanism(as shown in Patent 2647608) and comprises a coin collecter sensor switch arm 41A, a relay 42 and a chute 42C. The arm 41A is movable downwardly from its switch open position to its switch closed position, the weight of a single coin being sufficient to move the arm and close the switch (prior to delivery of the coin to collecter 61) and actuate relay 42 that moves the ratchet wheel 132 of a stepping relay assembly 139, the circuit through which stepping relay had previously been opened as by the below described action of the coin dispensing assembly. Such movement of the wheel 132 of relay 139 moves a lobed cam wheel 140 of the relay 139 and closes a relay switch 42S. A key actuated switch 43 is actuated by a party, as 16, authorized to use the apparatus — as the party using a motel room in which such apparatus 200 is located and provided with a room key which key fits the lock 43K of the assembly 43: this use of a key provides an identification requirement and actuates switch 43S, the closing of the switch 43S and the switch 42S closes a circuit through master relay 60; closure of the circuit through the relay 60 closes switches 68S and 47S ; closing switch 68S and switch 47S closes the circuit to the solenoid 68 in the board trigger relay assembly 58 and, also, starts and powers the timer motor 47M; solenoid 68 then moves latching plunger 129 from the path of the board 30, urged by spring 72 to the open position of that board (shown in FIGS. 2 and 8), and so actuates switch assembly 70 shown in FIG. 14.

The timer motor 47M actuates the timer switch 47S for a predetermined time (15 minutes in the preferred embodiment) and is provided with a automatic return mechanism 47R which serves to return the timer back to its zero position when the power to the motor is turned off.

As an example the motor 47M is connected to the timer switch 475 by a shaft and a weight is connected to the shaft by a cable wound around the shaft accordingly, each actuation of the timer 47 provides a predetermined time for the operator 16 to USE THE APPARATUS 200. If one operator doesn't use the apparatus for the full period provided and returns the ironing board to its close position prior to the full period allowed by the timer, the person next using the iron will still have use of the implements of assembly 215 for the full period provided for the maximum setting of timer 47 following actuation of apparatus 200 by insertion of a coin into the assembly 41.

The relay 48 is a conventional double pole, single throw switch: it serves to connect power to the implements of the implement subassembly 215. Relay 48 is actuated by completion of the circuit through stepping relay 130, the key or identification relay 43 and the timer subassembly 47. Relay 48 (a) connects the power from lines 111 and 112, by main implement line wires 74 and 75 when switch of power safety assembly 70 is closed, to each of the implements, as 50, of the subassembly 215, and (b) concurrently actuates stepping relay assembly 89 to permit actuation of the coin dispensing assembly 45 through switch arm 65.

While the relay 48 is shown in FIG. 10 as one solenoid with several switch arms this can of course be substituted for by several solenoids each with its own switch arm and arranged in parallel with solenoid 48. A power safety assembly 70 is located in the implement power lines 74 and 75. The power safety assembly comprises an arm 71, generally in the shape of an inverted *v* and a spring 72; arm 71 projects into chamber 25 through slot 78 in wall 204. The apex of the V of arm 71 is pivotally supported on the bracket 73 on wall 24. A compression spring 72 is located between and attached to the lower portion of the arm 71 and to the wall 24. The arm 71 carries double switch arms 76 and 77. The spring-loaded arm 71 is urged against the board 30 when board 30 is in its closed position as shown in FIG. 7. When the ironing board trigger 58 relay is actuated as above described the board 30 is urged by the arm 71 to move outward from its closed position shown in FIGS. 1 and 7 to the open position shown in 2 and 8 and the arm 71 then moves to its extended position shown in FIG. 14 and permits (as shown in FIG. 10) electric power to flow from the power source 110 by lines 111 and 112 through the switch arm 76 and 77 to line 74 and 75 and then to the lines, as 51, to the implement connected thereto, as 50.

The sequence of operation between the implement power assembly operation and the coin return assembly operation is provided for by the stepping assembly 89 herein below described.

The stepping relay assembly 89 comprises a lobed cam wheel 80, a flexible arm 81 carrying a movable electrical contact 82M, a fixed arm 82 carrying a fixed electrical contact 82F a rigid shaft 83, a first ratchet wheel 86 and a second ratchet wheel 86' and solenoids 126 and 88. Wheels 86, 86' and 80 are co-axial and firmly fixed on to shaft 83. Shaft 83 is rotatably supported on brackets 84 and 85 which latter are each fixed to wall 24 of assembly 20, as are the coils of solenoids 88 and 126. Plunger 87 of solenoid 88 engages toothed wheel 86 and plunger 127 of solenoid 126 engages wheel 86': both plungers serve to move shaft 83 clockwise as shown in FIG. 11. When plunger 87 is actuated by the solenoid 88 it causes stepwise rotary movement of the lobed wheel 80 while arm 81 bears on top surface, as 80T of flat lobed wheel 80. Thereby a step by step "on-off" relationship is effected across contacts 82M and 82F of assembly 89 because the lobed cam wheel 80 can be rotated about the shaft 83 by actuation of either of the ratchet wheel 86 or the ratchet wheel 86'. The arm 81 yieldably yet firmly holds the lobed wheel 80 in position between actuations: this circuit that causes the dispensing of the iron board 30 to its open position also thus moves the lobed wheel 80 into a circuit closing position to actuate assembly 45 (an additional step action by relay 126 will bring the lobed wheel 80 to a position where it opens the circuit). Each plunger 87 (and 127) of assembly 89 is spring-loaded so as to return to its position where its tooth contact is, as 127, out of contact with its ratchet wheel, as 86', when it is not positively actuated by the current through the solenoid therefor.

As shown diagrammatically in FIG. 10 the insertion of a coin in assembly 41 moves the assembly 89 elements to a position at which the implement assembly 215 is operative (after door 30 is released and key assembly 43 is operated). When the coin dispensing mechanism 45 has completed its operation, its coin carrier, on delivery of the coin 62 to the customer 16, actuates the shaft 83 and cam wheel 80 and thereby disconnects the power to the implement assembly 215 and breaks the electrical circuit to the solenoid 68 that had theretofore opened the locking latch 129 and permitted the board 30 to escape to its open position as shown in FIG. 8.

The implement assembly 215 comprises a plurality of electrical powered elements such as an iron 50, a pants-presser 160, a brush 161, a vacuum cleaner 152, and a hair or hand dryer 163; each is operatively connected to the power source 110 after the arm 71 has been released to connect the switch 70 and thereby actuate the implement lines 74 and 75. A standard two-conductor cord 170 is provided for the pant's presser 160, a similar cord 171 for the electrical power brush, a similar cord 172 for the vacuum cleaner 163, and a similar cord 173 for the hair dryer 163.

Each implement as 50 and 160–163 is provided in chamber 25 with its own supporting hanger 56, 160H, 161H, 162H and 163H for elements 50, 160, 161, 162, and 163, respectively: each such hanger is firmly supported on the rear wall of the implement chamber 25. Each of the hangers as 160H–164H is provided with a switch that is closed by the suspension thereon of the implement intended therefor in the same manner as above described for the return switch 70. One end of each cord as 160H for each implement is firmly attached to the wall 24 near the hanger for such implement with a clear indicia such as word or diagram of the apparatus, describing the apparatus that will be supported on each hanger near the close vicinity of the hanger.

Each of the hangers as 160H–164H operates in the same manner to close a circuit to the coin return mechanism, i.e. each hanger as 56 and 160H–163H carries a double pole switch arm as 56S and 160S–163S, respectively, is spring-loaded, generally L-

shaped, pivotally supported at its top and spring-loaded to be somewhat extended from the board or wall on which such hanger is pivotally supported, as by springs **162R**, **161R** and **56R** for elements **162**, **161** and **50** respectively which resiliently extends each empty hanger from the wall **24**. One arm of such switches is normally opened by the action of such spring: each such normally open switch arm is closed by the application of the weight of the implement intended to be supported by such hanger. The normally open array of the switch arms **56A** and **160A–163A** provides that the coin return system is not actuated until each of the elements is returned to its proper hook. Implement return sensing assembly **53**, including lamps **50W**, **160W**, **161W**, **162W**, **163W** to indicate that all the implements are not yet back on their hook, is provided so that the customer will be warned before he closes the folding ironing board back to the position shown in FIGS. **4** and **7** and will have the opportunity to put each of the implements back on its proper hanger so that the coin return will be actuated when all the implements provided in chamber **25** have been returned to their proper place and the normally open arm of switch arms closed thereby; normally open switch arms (**56A** and **160A–163A**) are connected in electrical series with each other and the board closure interlock assembly **91** as a safety feature to avoid accidental or improper actuation of the coin return unit.

The operator **16** uses the implements of assembly **215**, as shown in FIG. **3**, for a period of time until a warning light **216** (and message on illuminated glass) is actuated by the timer **47** to indicate to the user that the time to return the implements and obtain refund is at hand.

Each of the implements **160** to **163** and **50** is provided with a warning light as **160W** which light is directly connected to the lines **111** and **112** (as shown in FIG. **10**) to provide a visible warning to indicate that that particular implement has not yet been properly returned to its support hanger. Thus the owner of the establishment in which the apparatus **200** is located may determine, without opening the board **30**, whether or not an implement has not been returned to its position within the casing **20**, by noting whether or not there is an ammeter reading across the meter **162**, when board **30** is in its closed position, opening the board **30**, and bringing orientation of all elements shown in FIG. **10** to their proper orientation for another sequence of operation as shown in FIGS. **1–5**.

Safety unit **91** is well hidden in the casing assembly **20** so that it is not subject to thievery or to manipulation by an unauthorized party and not activated except by closing chamber **25**. The board closure safety assembly **91** comprises a base **92** with a hollow cylindrical body **93** attached thereto, a compression spring **94** located in the housing, a shaft assembly **106** which comprises a shoulder **95** and the narrower shaft **96** firmly connected to each other, and an end wall **105** which supports brush chambers **107** and **108** in which brushes **99** and **102** are slideably located. The piston shaft **96** slideably fits within a hole therefor in the end wall **105** of the body **93** of the assembly **91**. Base **92** is fixed to wall **24**. A conductive metal ring **98** is located on shaft **96**.

Unit **91** is located to the left and below the rod or shaft **36** as shown in FIG. **9**. It is actuated by the completion of closure of the board **30** when base end **33** of board **30** contacts the outer L-shaped end **109** of shaft **96** of the assembly **91** and moves the shaft **96** to effect completion of a circuit through lead **101**, spring **101**, brush **99**, ring **98**, brush **102**, spring **103** and lead **104**. Thereby, closure of the ironing board, through assembly **91**, and the return of all of the implements, as **50**, onto the arm therefor, as **56**, and closure of the switches attached to such arms provides for a circuit to actuate the coin dispenser relay **45**.

The tip **97** of the shaft **93** projects toward wall **23B**: the shaft **97** has electrically conductive ring **98** which is located, in the extended position of the spring **94** shown in FIG. **13**, interiorly of the wall **105**; however extension of the shaft **97** toward the wall **23B** brings ring **98** into contact with brushes **99** and **102**. Brush **99** is spring-loaded by a spring **100** which connects brush **99** to a lead **101** while the bottom brush **102** is connected to a spring **103** and lead **104** so that, on movement of the shaft **97** away from the base **92** an electrical circuit is completed from the lead **101** to lead **104** when the end **33B** of the board **30** extends the shaft **97** of the assembly **91**. The completion of the circuit through the assembly **91** thus requires the closure of the board **30** which closure precedes to the activation of the coin dispensing unit **45**, as such closure of the board precludes improper repeated actuation of the coin dispenser assembly in view of the connections and operation of the stepping assemblies **89** and **139** and latch assembly **58** as herein described for the apparatus **200**.

The bottom portion of the plunger **129** (which plunger is actuated by the solenoid **58**) is bevelled outwardly and upwardly and the plunger **129** is spring-loaded by spring **130**. Accordingly when, as shown in FIG. **4**, the board **30** is moved from its open position shown in FIGS. **3** and **7** to the closed position as shown in FIGS. **4** and **7**, the edge of board **30** engages the bevelled portion of the plunger **129** and moves it upward against the spring **130** and the plunger then locks into a slot **217** therefor, which slot is not accessible from the surface **35**; the board is held to a closed position, and is not again able to open until the coin unit **41** is actuated by insertion of coin into the slot **41S**.

The return of the ironing board to its rest position, through closed switches **91** and **56S** and **160S–163S** of assembly **53**, actuates coin dispenser relay **46** which connects a conventional coin dispenser (as in U.S. Pat. No. 2,468,107) **45**. The coin dispenser assembly **45** is provided with a coin source **49**. The coin source is a standard coin box with coins held therein so as to feed into the dispenser **45** in sequence controlled by the assembly **53** and relay **89**.

The stepping relay assembly **139** comprises a lobed cam wheel **140**, a flexible arm **131** carrying a movable electrical contact **132M**, a fixed arm **132** carrying a fixed electrical contact **132F**, a rigid shaft **133**, a first ratchet wheel **132** and a second ratchet wheel **136** and solenoids **42** and **138**. Wheels **132**, **136** and **140** are coaxial and firmly fixed on to shaft **83** and of same size and shape as wheels **86'**, **86** and **80** of assembly **89**. Each of the lobed wheel **80** and **40** have four equally spaced high cam surfaces and low cam surfaces while

the wheels 86, 86', 132 and 136 have eight equispaced teeth. Shaft 83 is rotatably supported on brackets 134 and 134' which latter are each fixed to wall 24 of assembly 20, as are the coils of solenoids 138 and 42. Plunger 42A of solenoid 42 engages toothed wheel 132 and plunger 137 of solenoid 138 engages wheel 136: both plungers serve to move shaft 133 clockwise as shown in FIG. 12. When plunger 137 is actuated by the solenoid 138 it causes stepwise rotary movement of the lobed wheel 140 while arm 131 bears on a surface, as 131 L or 131T of flat lobed wheel 140. Thereby a step by step "on-off" relationship is effected across contact 132M and 132F of assembly 139 because the lobed cam wheel 140 can be rotated about the shaft 133 by actuation of either of the ratchet wheel 132 or the ratchet wheel 136. The arm 131 yieldably yet firmly holds the lobed wheel 140 in position between actuations.

Each plunger (137 and 42B) of assembly 139 is spring-loaded so as to return to its position where its tooth contact is, as 42A, out of contact with its ratchet wheels (as 132) when it is not positively actuated by the current through the solenoid therefor. For stepping relay 139 the insertion of a coin (63) into assembly 41 closes a circuit to solenoid 42: closure of the circuit to solenoid 42 actuates its plunger 42B and moves tooth contact portion 42A of the plunger 42B to engage and drive ratchet wheel 132 and rotate shaft 133 for a distance which moves the lobed wheel 140 one step, and cause the arm 131 to move from a depressed cam surface, as 131L, to a high cam surface, as 131T and the contact points 131M to move from one of its positions—of circuit closure as shown in FIG. 12—to another position — of open circuit as shown in FIG. 11. The arm 131 then firmly yet releasably holds the lobed wheel 140 in the closed position shown in FIG. 12 or the open position of FIG. 11.

Closure of circuit through switch 42S in conjunction with actuation of circuit through relay 43S actuates relay 60.

Subsequent actuation of the circuit to solenoid 138 and actuation of its plunger 137 moves the tooth contact portion 137A of plunger 137 to engage and drive ratchet wheel 136 and rotate shaft 133 for a distance which moves the lobed wheel 140 one step and cause the arm 131, if then resting on a depressed cam surface as 131L of lobed wheel 140, (and switch 42S closed) to be raised by an elevated cam surface, as 131T to a raised portion (as shown for arm 81 of assembly 89 in FIG. 11) and the movable contact point 132M is moved from its closed to the open position of those contacts (132M and 132F) and of switch 42S (as diagrammatically shown in FIG. 10). On each dispensing of a coin as 62 by a coin dispensing wheel as 64 a lobed cam 124 is rotated and thereby closes a switch 125 to actuate solenoid 126 and thereby actuate its plunger 127 which acts on the teeth of the ratchet wheel 86' to move the lobed wheel 80 of assembly 89 to a position at which the coin dispensing unit is rendered inactive. Solenoid 126 is powered direct from lines 111 and 112. The prior closed circuit through the contacts 82M and 82F of assembly 89 is broken by the movement of the lobed wheel 80 concomitant on the movement of the wheel 86' by the action of the plunger 127 because of the above described apparatus functions concomitant on the dispensing of a coin by the unit 45 and solenoid 138 of stepping unit 139 is actuated concurrently with actuation of relay 126 by the step or act of dispensing each coin, as 62, from unit 45 and rotating cam 124.

Stepping unit 139, therefore, provides that each time the coin dispenser unit 45 is operated, the act of dispensing a coin disconnects the circuit theretofore complete through switch 43S, 42S and 60 from power source 110. When, thereafter, the coin mechanism 41 is actuated by operator 16 or a subsequent customer, arm 41A thereof serves to actuate solenoid 42 which serves to actuate plunger 42B which acts on the ratchet wheel 132 and serves to move lobed wheel 140 to close the circuit through the contact points 132M and 132F thereof and through relay 60, (notwithstanding that such circuit had previously been opened by the action of the relay 139). This action of assemblies 139 and 89 provides that on each dispensing of the coin as 62 the coin dispensing unit 45 as well as the door opening unit 58 are operatively disconnected from the source of power which thereby prevents any powering of the implements of assembly 215 or the coin dispensing unit 45 until the cycle of operation provided by the apparatus 200 is next paid for by insertion of coin in the coin collecter assembly 41.

The provision of coin return as above described to the operator encourages his participation to return all implements in proper place for use by the next customer.

Counters may be provided at each stepping relay to record the number of deposits (at assembly 89 or 130).

I claim:

1. Apparatus for providing an electrically powered implement on a short term rental basis for use in a limited area comprising

a. a casing,

b. an electrically powered implement,

c. a source of electric power,

d. a coin collecting assembly and a first electrical switch actuated thereby,

e. a coin dispensing assembly separate from said coin collecting assembly and a second electrical switch actuated thereby,

f. a timing assembly and a third electrical switch actuated thereby,

g. said casing having a plurality of walls and an opening, a closure for said opening, said closure hingedly connected to one of said walls, said closure and wall enclosing a casing chamber when said closure is in its closed position,

h. an implement chamber and a peripheral casing chamber portion within said casing, partition walls separating said implement chamber within said casing from a peripheral portion of said casing chamber,

i. a closure release means operatively connected to said power source through said first electrical switch and to said closure in its closed position,

j. an implement supporting element in said implement chamber, said implement supporting element firmly connected to a normally open fourth electrical switch,

k. a fifth electrical switch within said peripheral portion of said casing chamber and peripheral to said implement chamber and operatively connected to

said coin dispensing assembly, said fifth electrical switch including means operatively engaged by said closure only when said closure is in its closed position,

l. a sixth electrical switch, normally closed, held in open position by said closure when it is closed,

m. said electrically powered implement connected to said source of power through said first electrical switch and said sixth electrical switch,

n. said coin dispensing assembly operatively connected to said source of electrical power through said fourth electrical switch and through said fifth electrical switch when said receptacle is closed by said closure,

o. said coin dispensing assembly including a coin dispenser and stepping switch, said stepping switch having a switch opening cam operatively connected to said first switch whereby said first switch is opened on completion of each operation of said coin dispensing assembly, and

p. said coin dispenser including a cam that is operatively connected to and actuates said stepping switch, whereby each said operation of the coin dispenser is initiated by each closing of the closure means.

2. A process of dispensing electrically powered implements for limited periods of time comprising the steps of

a. retaining electrically powered implements in place in an implement receptacle therefor and retaining coins in a first coin receptacle, followed by

b. operating a receptacle closure release of said implement receptacle by insertion of a first coin into a coin-operated assembly and concurrently collecting the coin in a second coin receptacle and closing an electric powered circuit to an electrical powered implement in said receptacle,

c. automatically maintaining said curcuit closed for a predetermined time and discontinuing said circuit to said implement on return of said implement to its place in said implement receptacle and then closing said implement receptacle, and

d. on such return of said implement the closing of said receptacle automatically actuating a coin dispenser, and dispensing another coin from said first coin receptacle by said coin dispenser and, on completion of said dispensing, disconnecting power to said electrical powered implements and wherein

e. the insertion of said first coin causes an implement receptacle closure on said implement receptacle to open and wherein the return of all said implements to their places and each said step of closing said implement receptacle actuates the coin dispensing assembly.

3. Process as in claim 2 wherein

a. each of several electrically powered implements are located in the receptacle and

b. each of said electrically powered implements is powered when the receptacle opening release mechanism is actuated, and

c. each of such implements is actuated for such predetermined time and

d. return of all of said implements to a predetermined position in said receptacle is required prior to the step of coin dispensing and wherein the closure of such receptacle is also a condition which is a precedent to the actuation of said coin dispenser.

4. Process as in claim 3 wherein a signal is provided while said circuits are closed and receptacle open until all of the implements are returned to their predetermined positions in said receptacle.

5. Apparatus as in claim 1 wherein

a. said electrically powered implement is one in a plurality of electrically powered implements and

b. one implement supporting element for each of said plurality of electrically powered element is located in said implement chamber, and

c. said fourth electrical switch comprises a group of series connected electrical switches each of which is operatively connected to the implement supporting element for one of said plurality of elements, and wherein all of said group of series connected switches are required to be closed for a circuit to be completed through said fourth electrical switch

6. Apparatus as in claim 5 wherein for each of said electrically powered implements a warning light is operatively connected with each of said group or series completed switches forming said fourth switch and the said warning light is directly connected through a separate switch to said power source and each said separate switches is normally open except when the implement is removed from the supporting element therefore and when so removed each said switch is normally closed.

7. Apparatus as in claim 1 wherein said electrically powered implement is an electrical iron and said closure is an ironing board.

8. Apparatus as in claim 6 wherein one of said electrically powered implements is an electrical iron and wherein said closure elements is an ironing board.

* * * * *