Office de la Propriété Intellectuelle du Canada
Un organisme d'Industrie Canada

Canadian Intellectual Property Office
An agency of Industry Canada

CA 2451884 A1 2003/02/13

(21) 2 451 884

(12) DEMANDE DE BREVET CANADIEN
CANADIAN PATENT APPLICATION

(13) A1

(86) Date de dépôt PCT/PCT Filing Date: 2002/07/22
(87) Date publication PCT/PCT Publication Date: 2003/02/13
(85) Entrée phase nationale/National Entry: 2003/12/23
(86) N° demande PCT/PCT Application No.: CH 2002/000410
(87) N° publication PCT/PCT Publication No.: 2003/011371
(30) Priorités/Priorities: 2001/07/30 (201 12 501.3) DE;
2001/12/21 (101 63 326.2) DE

(51) Cl.Int.^{7}/Int.Cl.^{7} A61M 5/00, A61M 5/315

(71) Demandeur/Applicant:
TECPHARMA LICENSING AG, CH

(72) Inventeurs/Inventors:
KIRCHHOFER, FRITZ, CH;
GRAF, RONEY, CH

(74) Agent: GOWLING LAFLEUR HENDERSON LLP

(54) Titre : APPAREIL D'ADMINISTRATION COMPORTANT UN DISPOSITIF DE DOSAGE
(54) Title: ADMINISTRATION APPLIANCE COMPRISING A DOSAGE DEVICE

(57) Abrégé/Abstract:
The invention relates to an administration appliance comprising: a) a housing (1, 3, 11) containing a reservoir (2) for a diffusable product; b) a piston which can be displaced in the reservoir (2) in an advance direction towards a reservoir outlet in order to diffuse the product; c) a piston rod (4); d) a dosage and drive element (12) by which means, in relation to the housing (1, 3, 11), a dosage movement can be carried out in order to select a product dose and a diffusion movement can be carried out in order to diffuse the product dose, said element being engaged with the piston rod (4) in such a way that the piston rod (4) is entrained during the dosage movement, simultaneously enabling a diffusion movement of the dosage and drive element (12) in relation to the piston rod (4); and e) a dose adjustment element (9) which is displaced in the advance direction by the dosage and drive element (12) during the diffusion movement, and which is respectively engaged with the piston rod (4) and the housing (1, 3, 11) in such a way that it can only be displaced with the piston rod (4) in the advance direction.

File No.: P 46309 Applicant: TecPharma Licensing AG

Administering Apparatus comprising a Dosing Device

Abstract

An administering apparatus comprising a dosing device, the administering apparatus comprising:

a) a casing (1, 3, 11) comprising a reservoir (2) for a product which can be delivered;

b) a piston which can be shifted in the reservoir (2) in an advancing direction towards a reservoir outlet, in order to deliver product;

c) a piston rod (4);

d) a dosing and drive element (12) using which a dosing movement for selecting a product dosage and a delivery movement for delivering the product dosage can be performed relative to the casing (1, 3, 11), and which is in an engagement with the piston rod (4) which slaves the piston rod (4) during the dosing movement, but which allows a delivery movement of the dosing and drive element (12) relative to the piston rod (4);

e) and a dosage setting member (9) which is moved in the advancing direction by the dosing and drive element (12) during the delivery movement, and which engages with each of the piston rod (4) and the casing (1, 3, 11), such that it can only be moved in the advancing direction jointly with the piston rod (4) and is moved counter to the advancing direction, relative to the piston rod (4), by the dosing movement.

(Figure 3)

File No.: P 46309 Applicant: TecPharma Licensing AG

Administering Apparatus comprising a Dosing Device

The invention relates to administering apparatus, preferably injection apparatus, which allow a product dosage to be delivered to be selected and are preferably provided for medical, therapeutic, diagnostic, pharmaceutical or cosmetic applications. Preferred examples of injection apparatus are injection pens, in particular semi-disposable pens. An administering apparatus in accordance with the invention can for example be an inhalation apparatus or an apparatus for dispensing a product to be ingested orally, in doses.

Administering apparatus should generally be easy to handle and therefore small, but on the other hand should exhibit as high a functionality as possible. So-called injection pens, which are referred to as such due to their slim shape, automatically fulfil the first aspect. A substantial aspect with regard to functionality is the capacity to freely select the product dosage to be injected in an injection. The option of selecting the product dosage is advantageous in particular in those applications in which a user administers the product to be injected him/herself, as is for example common in diabetes therapy or administering hormones, to name but two preferred example applications. The option of flexibly selecting the product dosage, however, involves a corresponding technical complexity which not only increases the price but also enlarges the apparatus in question.

An injection pen in which the product dosage is selected is described in US-PS 4,973,318. The pen comprises a piston rod which is formed by a threaded rod and serves to shift a piston in a product ampoule and so deliver the product. The pen comprises a front casing sleeve and a rear casing sleeve which can be rotated relative to each other about a common longitudinal axis. The product dosage is selected by relatively rotating the two casing sleeves. The piston rod is in threaded engagement with a threaded nut. The threaded nut forms a front section of a sleeve-shaped dosing and activating element. This dosing and activating element protrudes into the rear casing sleeve at a rear end and is connected, secured against rotating, to the rear casing sleeve,

but can be shifted back and forth relative to the rear casing sleeve in the longitudinal direction of the piston rod. If the rear casing sleeve is rotated for the purpose of selecting the dosage, then the dosing and activating element compulsorily rotates with it. Since, however, the piston rod is connected, secured against rotating, to the front casing sleeve, the rotational movement moves the dosing and activating element further backwards, out of the rear casing sleeve. This increases the overall length of the arrangement of the piston rod and the dosing and activating element and increases a slight distance between the front end of the dosing and activating element and a stopper area of the casing. This slight distance corresponds to the maximum possible stroke when the dosing and activating element is advanced, together with the piston rod, towards a front end of the pen, for the purpose of delivering the product. Due to this very simple dosing mechanism, the stroke of the delivery movement corresponds to the respectively set product dosage and is thus variable.

An injection pen is known from WO 97/17096 which always exhibits the same delivery stroke, irrespective of the selected product dosage. The piston rod is likewise formed as a threaded rod and connected, secured against rotating, to the casing of the pen. A dosage setting nut is in threaded engagement with the piston rod. The piston rod protrudes into a sleeve-shaped dosing and activating element. The dosing and activating element and the dosage setting nut of this pen are separate parts. The dosing and activating element is connected, secured against rotating, to the dosage setting nut, but can be shifted in the longitudinal direction of the piston rod. For this engagement, the dosing and activating element surrounds the dosage setting nut. For selecting the product dosage, the dosing and activating element is rotated about the longitudinal axis, wherein the dosage setting nut is rotated with it. Since the dosage setting nut is in threaded engagement with the piston rod, linearly guided on the casing, and since the piston rod is blocked against moving counter to the advancing direction, the dosage setting nut is moved backwards and therefore deeper into the dosing and activating element, during its rotational movement along the piston rod. A slight distance results between the front end of the dosage setting nut and a stopper of the casing lying opposite in the advancing direction, said slight distance corresponding to the path which the piston rod and the dosage setting nut can jointly travel during the delivery movement, and thus to the product dosage. To form the connection, secured against rotating, between the dosing and activating element and the dosage setting nut, it is necessary for these two parts to overlap along the longitudinal axis, which increases the

diameter of the pen. When using the dosing mechanism in a semi-disposable injection pen, assembling the parts of such a pen is made more difficult if the dosage setting nut on the one hand and the dosing and activating element on the other are each components of parts of the pen which have to be connected to each other.

It is an object of the invention to provide an administering apparatus in which the product dosage is selected, which is slim and inexpensive and enables a constant delivery stroke.

Another object is to design a dosing mechanism of a semi-disposable pen or other administering apparatus, such that assembling the apparatus when exchanging a reservoir module is simplified.

An administering apparatus such as the invention relates to comprises a casing, a reservoir for a product which can be delivered, preferably injected, and a piston which is accommodated in the reservoir such that it can be shifted in an advancing direction towards a reservoir outlet, such that product is delivered through the reservoir outlet by shifting the piston in the advancing direction. The reservoir can be formed by a container which is accommodated by the casing. An ampoule in particular can for instance form the reservoir. In principle, however, the reservoir can also be formed directly by the casing itself, i.e. without interposing a product container. The product is preferably a liquid for medical, therapeutic, diagnostic, pharmaceutical or cosmetic applications. Thus, the product can for example be insulin, a growth hormone or also liquid or pulpy food. The administering apparatus is preferably employed in applications in which a user self-administers the product him/herself, as is for example common in diabetes therapy. Its use in the field of in-patients or out-patients, by doctors or trained staff, is not however to be excluded.

The administering apparatus further comprises a piston rod which serves to move the piston in the advancing direction. The piston rod can be connected fixedly, i.e. permanently, to the piston, by which forming the piston and the piston rod as one piece is also to be understood. In a preferred embodiment, however, the piston and the piston rod are embodied as separate components, and a front end of the piston rod pushes against a rear side of the piston for the purpose of delivering product.

Furthermore, the administering apparatus comprises a dosing and drive element using which a dosing movement for selecting a product dosage and a delivery movement for delivering the product dosage can be performed relative to the casing. The delivery movement is preferably in the advancing direction, and the dosing movement is preferably a rotational movement about an axis parallel to the advancing direction. The dosing and drive element is in an engagement with the piston rod which slaves the piston rod during the dosing movement, but which does not impede or at least allows a delivery movement of the dosing and drive element relative to the piston rod. The engagement between the dosing and drive element and the piston rod is preferably a positive lock. If the dosing movement is a rotational movement, the engagement between the dosing and drive element and the piston rod creates a connection, secured against rotating about the rotational axis of the rotational movement.

Lastly, the administering apparatus comprises a dosage setting member which engages which each of the piston rod and the casing. Due to the engagement with the piston rod on the one hand and the engagement with the casing on the other, the dosage setting member can only be moved in the advancing direction jointly with the piston rod and is moved counter to the advancing direction, relative to the piston rod, by the dosing movement. The dosage setting member is moved in the advancing direction by the dosing and drive element during its delivery movement. It thus completes a delivery movement, jointly with the piston rod itself, which is transferred onto the piston and results in product delivery.

The engagement between the dosage setting member and the piston rod is preferably a threaded engagement. In this case, the piston rod is provided with a thread around the longitudinal axis of the piston rod. The engagement can also be formed differently, for example in the manner of a ratchet. Such a toothed engagement, however, is preferably used to prevent the piston from moving counter to the advancing direction.

Since the dosing and drive element does not act directly on the piston rod during its delivery movement, but rather on the dosage setting member, as is already known in principle from WO 97/17096, a delivery stroke can be achieved which is always the same length. Since, however, unlike the known injection apparatus, the dosing and drive element is connected, secured against rotating, to the piston rod, and the dosage setting member engages with the casing in order to

obtain a dosing stroke of the dosage setting member counter to the advancing direction, the administering apparatus is slimmer. For the dosing and drive element no longer has to encompass the dosage setting member, as is the case with the known apparatus, in order to perform the dosing stroke of the dosage setting nut there. It is sufficient if a front abutting area of the dosing and drive element quite simply pushes against the dosage setting member in the course of its delivery movement, in order to advance it together with the piston rod, for delivery. Accordingly, the dosing and drive element and the dosage setting member can advantageously be arranged one behind the other, without overlapping, with respect to the advancing direction. The dosing and drive element can be a very simply shaped part which with respect to dosing only has to be additionally shaped such that the shifting connection, secured against rotating, to the piston rod can be established. By omitting the engagement between the dosing and drive element and the dosage setting member for the purpose of dosing, it is necessary for the dosage setting member and the casing to engage, however this does not require an additional space transverse to the piston rod. The casing preferably forms a linear guide, pointing in the advancing direction, for the dosage setting member.

The invention is particularly advantageous in so-called semi-disposable administering apparatus, in particular semi-disposable injection pens. Such administering apparatus comprise a reservoir module which not only comprises the reservoir for the product but also holds the piston rod. Once the reservoir has been emptied, the entire reservoir module including the piston rod is exchanged for a new reservoir module with a filled reservoir. A rear portion of such a semi-disposable administering apparatus comprises a dosing and drive element and usually a counting and indicating means. This portion of the administering apparatus, which is generally technically complex and therefore expensive, is designed as a re-usable part and can be repeatedly connected to a new reservoir module. The reservoir module, by contrast, can be designed as a disposable part, hence the designation “semi-disposable”. In such apparatus, assembling the new reservoir module and the rear portion of the apparatus with the dosing and drive element is made easier by the invention, since it is not necessary during assembly to establish an engagement between the dosing and drive element of the rear portion of the apparatus and the dosage setting member, which is a component of the reservoir module.

The dosing and drive device can operate manually, semi-automatically or fully automatically. In the first case, both the rotational dosing movement and the translational delivery movement are performed manually. In the second case, either the rotational dosing movement or the translational delivery movement is performed manually and the other movement is performed using motors or by means of another type of force application, for example by means of a spring force, when the user has triggered the corresponding movement using an activating handle. In the third case, that of the fully automatic dosing and drive device, the dosing movement and the delivery movement are performed using motors or by means of another force, for example a spring force. In this case, only the dosage is selected manually, for example by means of one or more buttons, and the delivery movement is likewise triggered by the user using a corresponding activating handle of its own. In most embodiments, the administering apparatus in accordance with the invention is equipped with a manual dosing and drive device, which is then referred to as a dosing and activating device. Thus, whenever a dosing and activating device is mentioned, it is therefore the manual embodiment which is being referred to. Where a dosing and drive device is mentioned, this is not intended to restrict the invention with respect to being manual, semi-automatic or fully automatic, but rather to comprise each of these embodiments. The term "dosing and activating module" is, however, used in connection with all the embodiments of the dosing and drive device.

The dosing and drive device can separately comprise a dosing element which performs the dosing movement and a drive element which performs the delivery movement. Preferably, however, the dosing movement and the delivery movement are performed by the same body of the dosing and drive device which is therefore also referred to in the following as a dosing and drive element or dosing and activating element.

The product is preferably a fluid, particularly preferably a liquid, having a medical, therapeutic, diagnostic, pharmaceutical or cosmetic application. The product can for example be insulin, a growth hormone or also a thin or thick, pulpy food. The administering apparatus is preferably employed in applications in which a user self-administers the product him/herself, as is for example common in diabetes therapy. Its use in the field of in-patients or out-patients, by trained staff, is not however to be excluded.

In the case of an injection apparatus, the product can be administered by means of an injection cannula or for example a nozzle for needle-free injections. The product can in particular be injected or infused subcutaneously or venously, or also intramuscularly. When administered by inhalation, the selected product dosage can for example be delivered from the reservoir into a chamber of the inhalation apparatus and vaporised for inhalation by means of a vaporising means. Furthermore, oral ingestion is conceivable, or administering via the oesophagus, to name but a few administering examples.

The administering apparatus is particularly preferably semi-disposable. In this case, the front casing section is a support for a reservoir module which is disposed of or recycled once the reservoir has been emptied, and the rear casing section is a support for a dosing and activating module which can be repeatedly used in conjunction with a new reservoir module. Since the reservoir module can also be treated separately as a disposable module, it is also a separate subject of the invention. The dosing and activating module can also be also a separate subject of the invention. Equally, a system consisting of an administering apparatus and at least one reservoir module, which can replace the reservoir module of the apparatus once it has been used, forms a subject of the invention. The duplex design of the administering apparatus, divided into a portion provided for use only once and a portion provided for repeated use (semi-disposable), is advantageous for injection pens in particular, but also for example for inhalation apparatus or apparatus for orally ingesting a product or for artificial feeding.

Other preferred embodiments of the invention are described in the sub-claims, wherein features which are claimed only with respect to the administering apparatus or only with respect to a reservoir module or a dosing and activating module are also preferred features with respect to the other subject of the claim, respectively.

Example embodiments of the invention will now be described on the basis of figures. Features disclosed by the example embodiments, each individually and in any combination of features, advantageously develop the subjects of the claims. Even features which are only disclosed by one example develop the other example, respectively, or show an alternative providing nothing to the contrary is disclosed or can be the case. There is shown:

Figure 1 two portions of a reservoir module in accordance with a first example embodiment;

Figure 2 the reservoir module obtained from the two portions of Figure 1;

Figure 3 an injection apparatus comprising the reservoir module of Figure 2, in accordance with the first example embodiment, in a longitudinal section;

Figure 4 a portion of the injection apparatus of Figure 3;

Figure 5 a mechanism holder of the reservoir module, in a longitudinal section and two views;

Figure 6 a blocking means for a piston rod, mounted by the mechanism holder;

Figure 7 a piston rod in a longitudinal section and a front view;

Figure 8 a latching block in a longitudinal section, a view and a top view;

Figure 9 a second example embodiment of an injection apparatus;

Figure 10 the cross-section A-A of Figure 9;

Figure 11 the cross-section B-B of Figure 9;

Figure 12 the cross-section C-C of Figure 9;

Figure 13 the cross-section D-D of Figure 9;

Figure 14 the mechanism holder of the second example embodiment, in a perspective representation;

Figure 15 the mechanism holder of Figure 14, in a view;

Figure 16 the cross-section A-A of Figure 15;

Figure 17 the dosage setting member of the second example embodiment, in a perspective representation;

Figure 18 the dosage setting member of Figure 17, in a longitudinal section;

Figure 19 the dosage setting member of Figure 17, in a view;

Figure 20 the dosage setting member of Figure 17, in a top view;

Figure 21 a portion of the injection apparatus in accordance with Figure 3; and

Figure 22 a portion of the injection apparatus in accordance with Figure 9.

Figure 1 shows a view of a reservoir part 1 and a mechanism holder 3, which are connected to each other to form the reservoir module 10 shown in Figure 2.

Furthermore, in Figures 1 and 2, a piston rod can be seen which protrudes, on an end of the mechanism holder 3 facing away from the reservoir part 1, into the mechanism holder 3 and is mounted by the mechanism holder 3 such that it can shift in an advancing direction pointing in the longitudinal axis L of the piston rod 4, towards a front end of the reservoir part 1 facing away from the mechanism holder 3. The reservoir part 1 is substantially a hollow cylinder which has a circular cross-section and comprises a connecting region at its front end for connecting to a needle holder for an injection needle. The reservoir part 1 serves to accommodate a reservoir container which in the example embodiment is formed by an ampoule 2 which can be seen in the longitudinal section in Figure 3. An outlet at the front end of the ampoule 2 is sealed fluid-tight by a membrane. When the needle holder is fastened to the front end of the reservoir part 1, a rear portion of the injection needle pierces the membrane, such that a fluid connection between the tip of the hollow injection needle and the reservoir 2 is established.

Figure 3 shows the injection apparatus in its entirety, in a longitudinal section. A piston is accommodated in the ampoule 2 such that it can shift in the advancing direction towards the outlet formed at the front end of the ampoule 2. Shifting the piston in the advancing direction displaces product out of the ampoule 2 and delivers it through the outlet and the injection needle.

The piston is advanced by the piston rod 4 which pushes against the piston via its front end and thus moves the piston in the advancing direction when advanced itself. The piston rod 4 is held by the mechanism holder 3 such that it can be moved in the advancing direction once a certain resistance has been overcome, but not counter to the advancing direction. The piston rod 4 is prevented from moving backwards, counter to the advancing direction, by a blocking means 8. The blocking means 8 is axially fixed by the mechanism holder 3, i.e. it is held in the mechanism holder 3 such that it cannot be moved in and counter to the advancing direction. It is, however, mounted by the mechanism holder 3 such that it can be rotated about the longitudinal axis L. The blocking means 8 also generates the resistance which has to be overcome in order to move forwards.

The blocking means 8 is shown on its own in Figure 6. It is formed by a one-part annular element which, rotatable about the longitudinal axis L, abuts the mechanism holder 3 between two facing, spaced collars 3b which protrude radially inwards from an inner surface of the

mechanism holder 3. The collars 3b form a fixing means for axially fixing the blocking means 8. How the blocking means 8 is mounted in the mechanism holder 3 is most clearly seen from the representation of the mechanism holder 3 in Figure 5.

Furthermore, a dosage setting member 9 is accommodated in the mechanism holder 3. The dosage setting member 9 is formed as a threaded nut and is in threaded engagement with an outer thread of the piston rod 4. The dosage setting member 9 is secured against rotating by the mechanism holder 3, but is guided such that it can move axially and linearly in and counter to the advancing direction. The piston rod 4 and the dosage setting member 9 form a spindle drive for selecting the product dosage to be administered.

The ampoule holder 1 and the mechanism holder 3 are connected to each other, secured against rotating and shifting, and together form the reservoir module 10 of the injection apparatus, said reservoir module 10 comprising the piston rod 4 held by the mechanism holder 3 by means of the blocking means 8, and the dosage setting member 9. The ampoule holder 1 and the mechanism holder 3 together form a front casing section of the injection apparatus. A rear casing section 11 is connected to said front casing section 1, 3 in a positive lock. The rear casing section 11 forms the support for a dosing and activating element 12 and, together with the dosing and activating element 12 and parts of a latching means and other parts, forms a dosing and activating module 30 of the injection apparatus.

Except for the dosage setting member 9, the piston rod 4 and the blocking means 8, a dosing and activating device comprises the other components for selecting the product dosage and activating the injection apparatus. In particular, it comprises the dosing and activating element 12. The dosing and activating device further comprises a counting and indicating means 17 for counting and optically indicating the selected product dosage. Not least the counting and indicating means 17 makes the dosing and activating module 30 a high-grade and therefore expensive part of the injection apparatus. While the comparatively inexpensive reservoir module 10 is designed as a disposable module, the dosing and activating module 30 is intended for repeated use, with consistently new reservoir modules 10.

For selecting the product dosage, i.e. for dosing, the dosing and activating element 12 can be rotated about the longitudinal axis L and is furthermore mounted by the rear casing section 11 such that it can linearly shift along the longitudinal axis L, in and counter to the advancing direction. The dosing and activating element 12 is hollow cylindrical and surrounds the piston rod 4 via a front section. A rear section of the dosing and activating element 12 protrudes out beyond a rear end of the casing section 11. A rod-shaped dosing slaving means 13 is inserted into the dosing and activating element 12 from the rear, as far as a collar of the dosing and activating element 12 protruding radially inwards. Furthermore, at the rear end, a closure 14 is inserted into the dosing and activating element 12, as far as the dosing slaving means 13. The dosing slaving means 13 is axially fixed relative to the dosing and activating element 12 between the radially protruding collar of the dosing and activating element 12 and the closure 14. The dosing slaving means 13 is also connected, secured against rotating, to the dosing and activating element 12. For the purpose of dosing, the dosing slaving means 13 protrudes into the hollow piston rod 4 from the rear. The piston rod 4 comprises a connecting section 4a (Figure 4) which engages with the dosing slaving means 13 such that the piston rod 4 and the dosing slaving means 13 and therefore also the dosing and activating element 12 cannot be rotated relative to each other about the common longitudinal axis L, but can be moved relative to each other along the longitudinal axis L, in and counter to the advancing direction. For this purpose, the connecting section 4a is formed as a linear guide for the dosing slaving means 13.

A restoring means 16 elastically tenses the dosing and activating element 12 counter to the advancing direction, into the initial position shown in Figures 3 and 4. In the initial position, the product can be dosed by rotating the dosing and activating element 12 about the longitudinal axis L. Then, from the initial position, the selected product dosage can be delivered by axially shifting the dosing and activating element 12. The restoring means 16 is formed by a spiral spring acting as a pressure spring, which is accommodated in an annular gap around the dosing and activating element 12 and axially supported between a collar of the casing section 11 protruding radially inwards and a collar of the dosing and activating element 12 facing opposite and protruding radially outwards.

The blocking means 8 fulfils a double function. On the one hand, it ensures via its blocking elements 8a that the piston rod 4 cannot be moved back, counter to the advancing direction,

relative to the mechanism holder 3 and therefore in particular relative to the piston accommodated in the ampoule 2. In its double function as a brake, the blocking means 8 furthermore prevents the piston rod 4 from moving forwards during the dosing process in which the dosage setting member 9 is moved axially, counter to the advancing direction, towards the dosing and activating element 12.

In the initial position shown in Figures 3 and 4, before dosing, the dosage setting member 9 abuts against a delivery stopper 3c (Figure 5) formed by the mechanism holder 3, in the advancing direction. The piston rod 4 is in permanent touching contact with the piston. For the purpose of dosing, the dosage setting member 9 is moved away from the delivery stopper 3c towards the dosing and activating element 12 by the threaded engagement with the piston rod 4 and the linear guide from the mechanism holder 3. This reduces a slight distance between a rear stopper area of the dosage setting member 9 and a front stopper area of the dosing and activating element 12, but on the other hand increases the slight distance between a front stopper area of the dosage setting member 9 and the delivery stopper 3c. The latter distance between the delivery stopper 3c and the dosage setting member 9 is the path length by which the dosage setting member 9 and – due to the threaded engagement – also the piston rod 4 are moved in the advancing direction in the course of the delivery movement of the dosing and activating element 12. The delivery stopper 3c forms a front translational stopper. During the delivery movement, the piston rod 4 pushes via its front end, which is formed by a plunger body connected to the piston rod 4 such that it cannot move in or counter to the advancing direction, against the piston and pushes the piston forwards in the advancing direction towards the outlet of the ampoule 2. The longitudinal axis L forms the rotational and translational axis of the movements which are performed for the purpose of dosing and delivering the product.

The distance which the dosage setting member 9 and the dosing and activating element 12 exhibit between each other during the dosing process when the dosage setting member 9 abuts against the delivery stopper 3c corresponds to the maximum product dosage which can be selected and delivered in the course of a delivery. The stroke movement of the dosing and activating element 12 is of equal length for each delivery. Dosing merely sets the distance between the dosage setting member 9 and the delivery stopper 3c and therefore the path length

which can be jointly travelled by the dosing and activating element 12 and the dosage setting member 9 in the course of delivery.

The braking function of the blocking means 8 and the braking engagement which exists between the piston rod 4 and the blocking means 8 for this purpose are clear from an overview of Figures 6 and 7. On the one hand, the blocking means 8 comprises two braking elements 8b for the braking engagement, which are each formed by an elastically flexing catch, like the blocking elements 8a before them. In the example embodiment, the blocking means 8 is formed by a single annular element from which four elastic catches axially project on an abutting side. The catches are arranged in a uniform distribution over the circumference of the annular element. Two mutually opposing catches form the blocking elements 8a and the other two catches, likewise arranged mutually opposing, form the braking elements 8b.

The piston rod 4 accordingly comprises two returning blocking means 6, which are formed on the outer surface on opposing sides and extend in the longitudinal direction of the piston rod 4, and two advancing braking means 7, which likewise extend in the longitudinal direction of the piston rod 4 on mutually opposing sides. The thread of the piston rod 4 for the threaded engagement with the dosage setting member 9 is formed by four remaining threaded sections 5 which extend over almost the entire length of the piston rod 4. The returning blocking means 6 and the advancing braking means 7 are each formed by a row of teeth. However, while the teeth of the returning blocking means 6 are formed as serrated teeth, narrowing in the advancing direction and comprising blocking areas pointing backwards and extending transverse to the advancing direction, the two rows of teeth which form the advancing braking means 7 do not comprise blocking areas pointing forwards having a comparable blocking effect. The teeth of the advancing braking means 7 each exhibit a softer tooth profile as compared to the returning blocking means 6. For the braking engagement between the blocking means 8 and the advancing braking means 7 of the piston rod 4 is not intended to prevent the piston rod 4 from being advanced, but merely to make it more difficult, in order to ensure that the piston rod 4 is not moved in the advancing direction during dosing. The front sides of the teeth of the advancing braking means 7 and the rear sides of the braking elements 8b, which touch the front sides of the teeth of the advancing braking means 7, are shaped such that a threshold force which is not reached during dosing has to be overcome in order to overcome the braking engagement. This

threshold force is larger than the force required to move the teeth of the returning blocking means 6 over the blocking elements 8a in the advancing direction. The threshold force is preferably at least twice as large as the initial frictional force between the returning blocking means 6 and the blocking elements 8a. The frictional force between the latter also only increases gradually between two consecutive blocking engagements in the course of the advancing movement. The threshold force of the braking engagement, by contrast, has to be applied from one blocking engagement to the next, immediately at the beginning of the advancing movement, in each blocking engagement. The threshold force should not, however, be so large that it distracts the user during delivery.

An undesired advancing movement by the piston rod as a response to the movement by the dosage setting member 9 when selecting the dosage can in principle also be caused by the blocking engagement of the blocking means 8 alone. However, such a movement is more reliably prevented because of the braking engagement than by the blocking engagement alone.

The connection between the reservoir module 10 and the dosing and activating module 30 is a positive lock. On the one hand, a latching engagement exists between the mechanism holder 3 and the casing section 11 which prevents relative movement in the axial direction. Beyond the latching engagement, the front casing section 1, 3 and the rear casing section 11 are guided axially and linearly directly onto each other, in order to prevent relative rotating when connected or connected. The axial guides 3d of the mechanism holder 3, which together with one or more corresponding engagement elements of the rear casing section 11 form the linear guide, can be clearly seen in Figure 5. The axial guides 3d are formed by guide areas on guide ribs; they could also be formed by guide areas in axially extending recesses. In this way, axial guide channels are obtained. The guide ribs are axially tapered, such that insertion funnels leading into the guide channels are formed for the one or more engagement elements of the rear casing section 11. In order to even better centre the casing sections 1, 3 and 11 at the beginning of connecting, the guide ribs are also tapered in the radial direction. The one or more engagement elements of the rear casing section 11 is or are preferably formed like the axial sections 3d on the surface counter area, i.e. the inner surface area, of the rear casing section 11.

The latching engagement exists between a first, female latching element 3a of the mechanism holder 3 (Figure 5) and a latching ring 20 which is connected to the rear casing section 11 such that it can move radially but not axially. The latching ring 20 forms a second, male latching element 21 which radially engages directly with the first latching element 3a. A lock/latch connection exists between the first latching element 3a and the second latching element 21 which prevents the reservoir module 10 and the dosing and activating module 30 from moving axially relative to each other.

Figures 3 and 4 show the latching element 21 in latching engagement with the latching element 3a. The latching element 3a is formed by an annular stay and a groove which runs around the outer surface of the mechanism holder 3. The annular stay forms a rear side wall of the groove. The second latching element 21 is formed by a cam which protrudes radially inwards from the inner surface of the latching ring 20 and which in the latching engagement is pushed radially inwards over an inner surface area of the rear casing section 11, protruding into the accommodating latching element 3a, by a restoring means 24. The latching ring 20 is supported in its entirety in the radial direction on an inner surface area formed by the rear casing section 11, by means of the restoring means 24, such that the restoring means 24 pushes against the outer surface of the latching ring 20 roughly in a radial extension of the latching element 21. The latching ring 20 surrounds the mechanism holder 3 and can be moved in its entirety radially back and forth against the restoring force of the restoring means 24, such that the second latching element 21 can be moved in and out of latching engagement with the first latching element 3a. The rear casing section 11 forms a tight sliding guide for the radial movement of the latching ring 20. On its side radially opposite the latching element 21, the latching ring 20 forms an unlatching button 22 for the user. In order to radially guide the restoring means 24 formed as a pressure spring, a guide cam projects radially from the outer surface area of the latching ring 20 facing away from the latching element 21.

Two blocking cams 23, which press radially outwards against a latching block 25, furthermore project from the outer surface area of the latching ring 20, in the circumferential direction on both sides of said guide cam and axially behind the guide cam. Since the blocking cams 23 abut against the latching block 25, a radial movement of the latching element 21 – which could result in the latching engagement being released – is prevented. The latching engagement between the

latching elements 3a and 21 is thus secured by the latching block 25. The latching engagement is secured in every position of the dosing and activating element 12, except for a releasing position which the dosing and activating element 12 assumes at the end of its delivery movement. The releasing position therefore coincides with the foremost shifting position which the dosing and activating element 12 assumes when it abuts the dosage setting member 9 in the course of its delivery movement and the dosage setting member 9 for its part abuts against the delivery stopper 3c of the mechanism holder 3. Providing the dosing and activating module 30 is not yet connected to the reservoir module, a mechanical stopper for the dosing and activating element 12 is formed by a stopper element 31 of the dosing and activating device. In the example embodiment, a reset holder ring which serves to reset the indicator 17 forms the stopper element 31. The dosing and activating element 12 abutting against said stopper element 31 defines the releasing position of the dosing and activating element 12 in this case, the releasing position defined by the stopper element 31 corresponding to that defined by the dosage setting member 9 abutting the delivery stopper 3c.

Figure 8 shows the latching block 25. In the example embodiment, it is formed as one piece by a blocking slider. The latching block 25 comprises a plate-shaped main body which extends axially when assembled, as for example shown in Figure 4. At one end, a stay 26 projects at right angles from the main body. When assembled, the stay 26 extends radially as far as the dosing and activating element 12. The stay 26 serves to fasten the latching block 25 to the dosing and activating element 12 which for this purpose comprises two annular stays formed axially spaced on an outer surface area, which form the slaving means 15a and 15b. The front slaving means 15a simultaneously forms the support collar for the restoring means 16. In the annular space formed between the slaving means 15a and 15b, the latching block 25 protrudes in via its stay 26 and is tightly enclosed axially on both sides by the two slaving means 15a and 15b.

At a front end facing away from the stay 26, the main body of the latching block 25 is provided with an axial recess 27 which is open towards the front end of the latching block 25. In this way, blocking tongues 28 extending axially on both sides of the recess 27 are formed. The blocking cams 23 of the latching ring 20 are arranged such that each of said blocking cams 23 pushes against one of the blocking tongues 28, providing the dosing and activating element 12 does not

assume the releasing position. When the latching block 25 moves axially, the restoring means 24 for the latching element 21 extends through the axial recess 27.

Indentation recesses 29 are furthermore formed in the main body of the latching block 25, and define the releasing position of the dosing and activating element 12. One indentation recess 29 is provided for each of the blocking cams 23. The position of the indentation recesses 29 is selected such that they only overlap the blocking cams 23, and thus allow the blocking cams 23 to be inserted, when the dosing and activating element 12 has been advanced into its releasing position.

It is clear that in the arrangement specifically selected in the example embodiment, a single blocking cam 23 could also be provided and the latching block 25 accordingly comprise only one indentation recess 29 and possibly also only one blocking tongue 28. Furthermore, the latching block could in principle be produced together with the dosing and activating element 12 as one piece. Forming it as a separate part, however, offers advantages with regard to production, assembly and the dosing and activating element 12 co-operating with the piston rod 4. With respect to the installation length of the latching block 25, it should also be pointed out that the latching block 25 is supported, on its outer side facing away from the latching element 21, on an inner surface area of the casing 11. In this way, the stability of securing the latching engagement is increased. The casing 11 preferably forms an axial guide for the latching block 25.

The functionality of the injection apparatus is described in the following, wherein it is assumed that a new reservoir module 10 and a dosing and activating module 30 which has already been used at least once are assembled and a product is then delivered for the first time.

The dosing and activating module 30 and the new reservoir module 10 are aligned axially with respect to each other, such that their two longitudinal axes are flush with each other. The reservoir module 10 is then inserted via its rear end into the casing 11, which is open to the front, of the dosing and activating module 30.

This centres the casing section 1, 3 and the casing section 11 on the tapered ends of the guide ribs 3d of the mechanism holder 3. While being slid on, the two casing sections are guided axially and linearly onto each other in a rotational angular position pre-set by the linear guide, until the

casing sections 1, 3 and 11 assume a connecting end position in which the latching engagement of the latching elements 3a and 21 can be established or can be set by itself.

The dosing and activating element 12 is locked in pre-set rotational angular positions relative to the rear casing section 11. The linear guide of the casing sections 1, 3 and 11 and the rotational angular locking positions of the dosing and activating element 12 are adjusted to each other such that the engagement, secured against rotating, between the dosing and activating element 12 and the piston rod 4 is established in every locking position of the dosing and activating element 12 and every rotational angular position in which the casing sections 1, 3 and 11 are linearly guided onto each other.

If the dosing and activating element 12 is situated in an axial position relative to the casing section 11 which is behind the releasing position, the latching element 21 is held in its radially innermost position by the latching block 25. In this position of the latching element 21, the dosing and activating module 30 and the reservoir module 10 cannot be slid onto each other up to the connecting end position and therefore also cannot be connected to each other, since the annular stay formed on the outer surface of the mechanism holder 3, which forms a part of the first latching element 3a, comes to rest abutting against the second latching element 21 first.

The annular stay can be reduced to a short radial protrusion in the tangential direction, if it is ensured that the casing sections 1, 3 and 11 can only be assembled in the rotational angular position in which such a protrusion and the second latching element 21 come to rest in an axial flush. The annular stay or radial protrusion could also form the first latching element 3a alone, since the essential function of the first latching element 3a is to allow the connection between the reservoir module 10 and the dosing and activating module 30 to be established only when the dosing and activating element 12 assumes its releasing position. If this condition is fulfilled, then the dosing and activating element 12 would ensure, when the connection between the reservoir module 10 and the dosing and activating module 30 is established, that the dosage setting member 9 is situated in its dosing zero position in which it abuts the delivery stopper 3c of the mechanism holder 3.

In order to fulfil the condition described above, the user pushes the dosing and activating element 12 axially forwards relative to the rear casing section 11 as far as the releasing position. In this relative position between the rear casing section 11 and the dosing and activating element 12, the blocking cams 23 can be moved into the indentation recesses 29 of the latching block 25. The user therefore not only pushes the dosing and activating element 12 at least as far as the releasing position, but simultaneously also pushes the first latching element 20 out of latching engagement by means of the unlatching button 22. The reservoir module 10 can then be moved axially over the annular stay of the first latching element 3a and inserted further into the rear casing section 11. The user can let go of the unlatching button 22. As soon as the first latching element 21 overlaps the second latching element 3a, it snaps into the accommodating latching element 3a due to the force of the restoring means 24, such that the latching engagement is established. The reservoir module 10 and the dosing and activating module 30 are then connected to each other in a defined way with respect to the position of the dosage setting member 9 and the piston rod 4. If the dosage setting member 9 still exhibited a slight distance from the delivery stopper 3c before the latching engagement is established, this distance is eliminated due to the action of the dosing and activating element 12, required to establish the connection. A resultant delivery of product can be accepted and even desired, for the purpose of priming the injection needle. This preferably resets the counting and indicating means 17 to zero.

In the defined initial state brought about in this way, the user can dose the product. The product is dosed by rotating the dosing and activating element 12 about the longitudinal axis L and relative to the casing section 11. Since the dosing slaving means 13 is connected to the dosing and activating element 12, secured against rotating, and for its part engages with the piston rod 4, secured against rotating, the dosing and activating element 12 slaves the piston rod 4 during its rotational dosing movement. Due to the threaded engagement between the piston rod 4 and the dosage setting member 9 and the linear guide of the dosage setting member 9 by the mechanism holder 3, the dosage setting member 9 performs an axial, translational dosing movement, pre-set by the thread pitch of the reciprocal threaded engagement, towards the dosing and activating element 12. The dosing and activating element 12 forms a rear translational stopper 12c which limits the translational dosing movement of the dosage setting member 9 and thus defines the maximum delivery stroke which may be set.

The counting and indicating means 17 counts the dosage units corresponding to the rotational angular position of the dosing and activating element 12 and indicates it optically.

Once the desired product dosage has been selected, the dosing process is completed. The selected product dosage is delivered by means of the delivery movement, pointing in the advancing direction of the piston, of the dosing and activating element 12. In the course of its delivery movement, the dosing and activating element 12 abuts against the dosage setting member 9 and slaves it. When the dosage setting member 9 abuts against the delivery stopper 3c of the mechanism holder 3 in the course of the delivery movement, the delivery movements of the dosing and activating element 12 and the delivery of product are completed. Once the user lets go of the dosing and activating element 12, it is preferably moved counter to the advancing direction, back into a new initial position for dosing and delivering the product again, by the restoring means 16. The counting and indicating means 17 is preferably coupled to the dosing and activating element 12 such that it has in the meantime been reset back to zero. It possibly possesses means for counting and indicating the total product amount already delivered and thus the residue product amount remaining in the ampoule 2.

In order to detach the reservoir module 10 from the dosing and activating module 30, the dosing and activating element 12 is advanced as far as the releasing position, i.e. until it abuts against the dosage setting member 9. in this position, the user can release the latching engagement again by pushing onto the unlatching button 22, and separate the reservoir module 10 from the dosing and activating module 30.

Figures 9 to 13 shows a longitudinal section and four cross-sections of a second example embodiment of an injection apparatus. The injection apparatus of the second example embodiment is identical to that of the first example embodiment with respect to the latch and latching block 25, such that reference is made in this regard to the description of the first example embodiment. In particular, the latching block 25 of the second example embodiment is identical to that of the first example embodiment with respect to all its functional details. The same applies to the latching elements 3a and 21.

The latching ring 20 and the position of the blocking cams 23 relative to the latching element 21 and relative to the latching block 25 in the initial state of the apparatus can be seen particularly clearly in the cross-sections of Figures 10, 11 and 12, to which reference is made in this regard, also as representative for the first example embodiment.

The injection apparatus of the second example embodiment differs from the first example embodiment in the engagement and the progression of movement of the components involved in dosing. Furthermore, the mechanism holder fulfils, in addition to the functions of the mechanism holder of the first example embodiment, in particular the function of positioning the dosage setting member in discrete rotational angular positions which may be changed relative to the mechanism holder, for the purpose of dosing. The blocking means of the second example embodiment, by contrast, is embodied more simply than that of the first example embodiment. Primarily, only the differences as compared to the first example embodiment will be described in the following, wherein for components which are identical in their basic function to the components of the same name in the first example embodiment but differ in details, numbers in the thirties with the same end digit, or exactly the same reference numerals as in the first example embodiment, as used. Where no statements are made regarding the second example embodiment, the corresponding statements regarding the first example embodiment shall apply.

In the second example embodiment, the dosing and activating element 32, which can be axially and linearly moved relative to the rear casing section 11 and rotated about the longitudinal axis L, is connected to the dosage setting member 39, secured against rotating. The dosing and activating element 32 and the dosage setting member 39 can be moved in and counter to the advancing direction, relative to each other and relative to casing sections 1, 3 and 11. The piston rod 4 is held by a mechanism holder 3, secured against rotating. In co-operation with blocking elements of the blocking means 38, formed on the mechanism holder 3 as one piece, the returning blocking means 6, which is functionally identical to the first example embodiment, prevents the piston rod 4 from moving counter to the advancing direction, but allows it to move in the advancing direction. The blocking elements simultaneously form the returning block and the rotational block for the piston rod 4. Furthermore, as previously in the first example embodiment, the dosing and activating element 32 forms a sliding guide for the piston rod 4.

During dosing, the dosing and activating element 32 performs the same rotational dosing movement as the dosing and activating element 12 of the first example embodiment. However, since the engagement is secured against rotating, the dosage setting member 39 is slaved during the rotational dosing movement. The threaded engagement between the piston rod 4 and the dosage setting member 39 is again comparable to that of the first example embodiment, such that due to the rotational dosing movement and the threaded engagement with the piston rod 4, a stopper 39c formed by the dosage setting member 39 is moved, in the course of dosing, counter to the advancing direction, towards a front end of the dosing and activating element 32. As opposed to the first example embodiment, the dosage setting member 39 thus completes a rotational dosing movement and a translational dosing movement relative to the front casing section during dosing, while the piston rod 4 remains stationary. Once dosing has been completed, the delivery movement of the dosing and activating element 32 advances the piston rod 4 by the path length which corresponds to the slight distance between a stopper area of the dosage setting member 39 and the delivery stopper 3c of the mechanism holder 3, set by the dosing.

The translational dosing movement of the dosage setting member 39 is limited counter to the advancing direction by a rear translational stopper 11c which is formed directly by the rear casing section 11 itself. In the second example embodiment, too, the rotational and translational axis of the components involved in dosing and delivering the product forms the longitudinal axis L.

As in the first example embodiment, the front casing section 1, 3 forms a sliding guide for the dosage setting member 39. In order to form the sliding guide, an inner surface area of the mechanism holder 3 and an outer surface area of the dosage setting member 39 are in sliding contact with each other. The dosing and activating element 32 engages with an inner surface area of the dosage setting member 39, to form the connection, secured against rotating, between the dosage setting member 39 and the dosing and activating element 32.

In the second example embodiment, the piston rod 4 comprises no braking means of its own beyond the returning blocking means 6. Rather, the front sides of the serrated teeth of the returning blocking means 6 also form the braking means on their own. The piston rod 4 of the second example embodiment can, however, be replaced by the piston rod 4 of the first example

embodiment. Accordingly, the mechanism holder 3 of the second example embodiment would in this case also have to form at least one braking element, preferably both braking elements, of the first example embodiment.

Figures 14 to 16 show the mechanism holder 3 of the second example embodiment in a perspective representation, a side view and in the cross-section A-A indicated in the side view. As in the first example embodiment, the mechanism holder 3 is embodied as a one-part sleeve part, preferably as a plastic injection moulded part. It comprises a bulge 3e on the outer surface of a front sleeve section. The front sleeve section is plugged into the reservoir part 1 and locked non-detachably, at least for the user, to the reservoir part 1 by means of the bulge 3e.

The latching element 3a is formed on a middle sleeve section of the mechanism holder 3, as in the first example embodiment.

A rear sleeve section, connected to the latching element 3a, forms a plurality of axial guides 3d on its outer circumference. The axial guides 3d are formed by guide ribs which protrude radially on the outer circumference of the rear sleeve section. More precisely, the axial guide formed by the axially extending, straight side walls of said guide ribs, such that – as in the first example embodiment – axial guiding channels are obtained. The guide ribs protrude out from the middle sleeve section like fingers, as far as the rear end of the mechanism holder 3, where they taper off axially. The axial guide 3d serves to linearly guide the rear casing section 11 when the reservoir module 10 is connected to the dosing and activating module 30. As can be seen in Figure 9 and most clearly in Figure 11, engagement elements 11d project radially inwards from the inner surface area of the rear casing section 11, corresponding in number and adapted in shape. One engagement element 11d protrudes into each of the axial guides 3d and is linearly guided by the axial guide 3d when the front casing section 1, 3 and the rear casing section 11 are slid into each other in order to be connected. In this way, it is ensured that there is no relative rotating between the front casing section 1, 3 and the rear casing section 11 when the engagement, secured against rotating, between the dosing and activating element 32 and the dosage setting member 39 is established in the course of connecting.

Since the guide ribs taper off axially at their rear ends, and the guide channels are thus widened into insertion funnels, centring between the front casing section 1, 3 and the rear casing section 11, for the purpose of connecting, is made easier. The guide ribs also taper off at their ends radially with respect to the surface area of the mechanism holder 3, which makes centring the casing sections 1, 3 and 11 into a rotational angular position pre-set by the axial guide 3d, relative to each other, even easier.

Just as the front casing section 1, 3 and the rear casing section 11 are prevented from rotating relative to each other when sliding them into each other, the dosage setting member 39 is also fixed with respect to its rotational angular position relative to the front casing section 1, 3, the dosage setting member 39 being detachably fixed in order to allow the rotational movement of the dosage setting member 39 necessary for dosing. In order therefore to enable the dosing movement of the dosage setting member 39 on the one hand, but to prevent an undesired dosing movement by establishing the connection between the front casing section 1, 3 and the rear casing section 11, the dosage setting member 39 is fixed by the mechanism holder 3 in discrete rotational angular positions, by means of a releasable locking connection.

Figures 17 to 20 show individual representations of the dosage setting member 39. For forming the locking connection, a number of locking recesses 39g are formed on the outer surface area of the dosage setting member 39, distributed in regular separation over the circumference. Each of the locking recesses 39g is formed by a straight, axially extending furrow having a rounded contour running in its cross-section.

The mechanism holder 3 is provided with two locking projections 3g (Figures 15 and 16). The two locking projections 3g project radially inwards from an inner surface area of the mechanism holder 3 in the rear sleeve section of the mechanism holder 3. They are arranged diametrically opposed to each other. The respective surface region of the mechanism holder 3, on which one of the locking projections 3g is formed, forms a spring element 3f which is elastically flexible in the radially direction. Due to the elastic flexibility and the rounded shape of the locking projections 3g, in conjunction with the rounded profile of the locking recesses 39g, the locking engagement between the locking projections 3g and the opposing locking recesses 39g may be released. This is necessary for selecting the dosage. On the other hand, the locking engagement is however

designed such that the dosage setting member 39 is rotationally angularly fixed sufficiently stable that there cannot be any undesired dosing movement of the dosage setting member 39 when the front casing section 1, 3 and the rear casing section 11 are connected, when the rotational coupling between the dosing and activating element 32 and the dosing and activating element 32 is established. The locking connection between the mechanism holder 3 and the dosage setting member 39 has the advantageous side effect of a tactile signal during dosing. In order to maintain the favourable elasticity of the spring element 3f, the rear sleeve section of the mechanism holder 3 is cut away in the surface region in question, such that the spring element 3f is maintained as an annular segment extending in the circumferential direction which is axially free on both sides.

Axial guides 39d for the engagement, secured against rotating, between the dosage setting member 39 and the dosing and activating element 32 may likewise be seen in Figures 17, 18 and 20. The dosing and activating element 32 is provided with at least one engagement element, in order to obtain the axial linear guide, i.e. the rotational block, between the dosing and activating element 32 and the dosage setting member 39. The axial guides 39d are again guide channels formed by a number of guide ribs extending axially in a straight line. Each of the guide ribs tapers off axially and radially at its rear end facing the dosing and activating element 32, in order to make centring between the dosing and activating element 32 and the dosage setting member 39 easier, when the engagement, secured against rotating, is established. The same design is therefore used for the axial linear guide of the dosage setting member 39 and the dosing and activating element 32 as for the axial linear guide of the casing sections 1, 3 and 11.

For the sake of completeness, reference is lastly also made to the dosing thread 39a and the delivery stopper 39c of the dosage setting member 39, which can most clearly be seen in Figure 18.

Lastly, two rotational blocks are provided for the dosage setting member 39 which are active in the two axial end positions of the dosage setting member 39. Reference is additionally made in this regard to Figure 22.

In order to prevent the possibility of the piston rod 4 being moved back in response to a rotational dosing movement by the dosage setting member 39, rotational stoppers 39h are formed at a front

end of the dosage setting member 39. In the front position, which the dosage setting member 39 assumes directly after the product is delivered or before the dosage is selected, the rotational stoppers 39h engage with rotational counter stoppers 3h formed on the mechanism holder 3 (Figure 16). The rotational stoppers 39h axially project from a front abutting side of the dosage setting member 39, and the rotational counter stoppers 3h protrude from an axially facing abutting area of the mechanism holder 3 forming the delivery stopper 3c, axially opposed to the rotational stoppers 39h. The engagement between the rotational stoppers 39h and the rotational counter stoppers 3h is such that it allows a rotational dosing movement in a rotational direction, which causes a translational dosing movement of the dosage setting member 39 directed away from the delivery stopper 3c, but prevents a rotational dosing movement in the opposite rotational direction, in the front axial end position.

Furthermore, another pair of rotational stoppers and rotational counter stoppers is provided, which are formed and co-operate in basically the same way as the stoppers 3h and 39h. Said second pair of rotational stoppers are rotational stoppers 39i on the one hand, which axially project from a rear abutting area of the dosage setting member 39, and rotational counter stoppers 11i on the other, which axially protrude from the facing stopper abutting area of the rear translational stopper 11c towards the dosage setting member 39, which however cannot be seen in Figure 9 due to their small dimensions. In the rear end position, the rear pair of rotational stoppers 11i/39i prevents the possibility of the piston rod 4 being moved in the advancing direction in response to a dosing movement by the dosage setting member 39, directed against the rear translational stopper 11c.

The height, i.e. the axial length, of all the rotational stoppers 3h, 39h, 11i and 39i is adjusted to the thread pitch of the engaged dosing thread of the piston rod 4 and the dosage setting member 39. The rotational stoppers are axially sufficiently short that the rotational dosing movement which moves the dosage setting member 39 away from the respective translational stopper 3c or 11c is not impeded.

When assembling the components of the reservoir module 10, the dosage setting member 39 is screwed onto the piston rod 4 as far as a pre-set axial position, as may be seen from Figure 9. The piston rod 4, together with the screwed-on dosage setting member 39, is then inserted into the

mechanism holder 3 from behind, until its blocking means 38 comes into blocking engagement with the returning blocking means 6 of the piston rod 4 and furthermore the engagement, secured against rotating, between the rotational stoppers 39h of the dosage setting member 39 and rotational counter stoppers of the mechanism holder 3 is established. Even while being inserted into the mechanism holder 3, the dosage setting member 39 is axially and linearly guided by the mechanism holder 3 via the locking engagement between the locking projections 3g and the locking recesses 39g, until the dosage setting member 39 abuts the delivery stopper 3c of the mechanism holder 3. In this front end position of the dosage setting member 39 relative to the mechanism holder 3, the engagement, secured against rotating, between the rotational stoppers 3h and 39h has also already been established.

In this state, the mechanism holder 3 and a reservoir part 1, already fitted with a reservoir, are connected to each other.

In a following step, the rear casing section 11 of the completely assembled dosing and activating module 30 is slid onto the mechanism holder 3, wherein the mechanism holder 3 and the rear casing section 11 can be centred with respect to each other due to the axial guides 3d and the engagement elements 11d of the rear casing section 11 and, once centred, are axially and linearly guided onto each other due to the guide engagement. In the course of sliding the rear casing section 11 onto the mechanism holder 3, the dosing and activating element 32 comes into engagement, secured against rotating, with the dosage setting member 39, wherein here too a certain centring is also possible first, using a linear guide corresponding to the axial guides 3d and the engagement elements 11d.

The dosing and activating element 32 is in locking engagement with the rear casing section in discrete rotational angular locking positions and in the locking engagement, i.e. in the respective rotational angular locking position, is axially and linearly guided. The rotational angular difference between two consecutive rotational angular locking positions corresponds to one dosage unit. The linear guide between the mechanism holder 3 and the rear casing section 11 on the one hand, and the discrete rotational angular positions of the dosage setting member 39 relative to the mechanism holder 3 (locking projections 3g and locking recesses 39g) and the rotational angular locking positions of the dosing and activating element 32 relative to the rear

casing section 11 on the other, are adjusted to each other such that the two casing sections 1, 3 and 11 are always slid linearly over each other in a rotational angular position such that the dosage setting member 39 and the dosing and activating element 32 are also aligned relative to each other for their engagement, secured against rotating, such that there is no relative rotating between the components involved in dosing while the reservoir module 10 is connected to the dosing and activating module 30.

With respect to the other details of assembling, in particular of establishing the latching engagement, and of the functionality of the injection apparatus in accordance with the second example embodiment, reference is made to the description of first example embodiment.

Rotational blocks can also be provided in the injection apparatus in accordance with the first example embodiment, which prevent undesired response movements by the piston rod 4 in the two axial end positions of the dosage setting member 9 of the first example embodiment. Figure 21 shows the two rotational blocks, which are formed in the same way as the rotational blocks of the second example embodiment. However, the rotational counter stoppers which in the second example embodiment are formed on the casing sections 1, 3 and 11 are formed in the first example embodiment by the blocking means 8 on the one hand and the dosing and activating element 12 on the other. Thus, a number of rotational stoppers 8h are formed on the abutting side of the blocking means 8 axially facing the dosage setting member 9 and axially protrude towards the dosage setting member 9. Since the blocking means 8 is axially and immovably mounted by the front casing section 1, 3 and connected, secured against rotating, to the piston rod 4, a rotational block for the rotational dosing movement between the piston rod 4 and the dosage setting member 9 is also obtained, via the front pair of rotational stoppers 8h/9h. The second pair of rotational stoppers is formed between the dosage setting member 9 and the rear translational stopper 12c. As in the second example embodiment, a number of rotational stoppers 12i protrude axially towards the dosage setting member 9 from the abutting area of the translational stopper 12c axially facing the dosage setting member 9. As in the second example embodiment, the dosage setting member 9 is provided on its rear side with rotational stoppers 9i which in the rear axial end position of the dosage setting member 9 engage with the rotational stoppers 12i. In the rear axial end position of the dosage setting member 9, the rear pair of rotational stoppers 9i/12i

only allows the rotational dosing movement which causes a translational dosing movement of the dosage setting member 9 in the advancing direction.

Reference numerals:

1	reservoir part, ampoule holder
2	reservoir, ampoule
3	mechanism holder
3a	first latching element
3b	fixing means
3c	delivery stopper, translational stopper
3d	axial guide
3e	bulge
3f	spring element
3g	locking projection
3h	rotational stopper
4	piston rod
4a	connecting section
5	threaded section
6	returning blocking means, row of teeth
7	advancing braking means, row of teeth
8	blocking means 8
8a	blocking element
8b	braking element
8h	rotational stopper
9	dosage setting member
9h	rotational stopper
9i	rotational stopper
10	reservoir module
11	rear casing section
11d	engagement element
11i	rotational stopper

12	dosing and activating element
12i	rotational stopper
13	dosing slaving means
14	closure
15a	slaving means, annular stay
15b	slaving means, annular stay
16	restoring means
17	counting and indicating means
18	-
19	-
20	latching ring
21	second latching element
22	unlatching button
23	blocking cam
24	restoring means
25	latching block
26	slaving means, stay
27	axial recess
28	blocking tongue
29	indentation recess
30	dosing and activating module
31	stopper element
32	dosing and activating element
33 – 37	-
38	blocking means
39	dosage setting member
39a	dosing thread
39c	delivery stopper
39d	axial guide
39g	locking recess, axial guide
39h	rotational stopper
39i	rotational stopper

File No.: P 46309 Applicant: TecPharma Licensing AG

Administering Apparatus comprising a Dosing Device

Patent claims

1. An administering apparatus comprising a dosing device, said administering apparatus comprising:

a) a casing (1, 3, 11) comprising a reservoir (2) for a product which can be delivered;

b) a piston which can be shifted in said reservoir (2) in an advancing direction towards a reservoir outlet, in order to deliver product;

c) a piston rod (4);

d) a dosing and drive element (12) using which a dosing movement for selecting a product dosage and a delivery movement for delivering the product dosage can be performed relative to said casing (1, 3, 11), and which is in an engagement with said piston rod (4) which slaves the piston rod (4) during said dosing movement, but which allows a delivery movement of said dosing and drive element (12) relative to the piston rod (4);

e) and a dosage setting member (9) which is moved in the advancing direction by the dosing and drive element (12) during the delivery movement, and which engages with each of the piston rod (4) and the casing (1, 3, 11), such that it can only be moved in the advancing direction jointly with the piston rod (4) and is moved counter to the advancing direction, relative to the piston rod (4), by the dosing movement.

2. The administering apparatus as set forth in the preceding claim, wherein said dosage setting member (9) and the dosing and drive element (12) are arranged one behind the other, without overlapping, with respect to the advancing direction.

3. The administering apparatus as set forth in any one of the preceding claims, wherein a blocking means (8) is provided which engages with the piston rod (4) in order to prevent the piston rod (4) from moving counter to the advancing direction.

4. The administering apparatus as set forth in any one of the preceding claims, wherein a blocking means (8) is provided which is in a braking engagement with the piston rod (4) which makes it more difficult for the piston rod (4) to move in the advancing direction.

5. The administering apparatus as set forth in any one of the preceding two claims, wherein the piston rod (4) and said blocking means (8) engage such that the piston rod (4) slaves the blocking means (8) during the dosing movement.

6. The administering apparatus as set forth in any one of the preceding three claims, wherein the blocking means (8) is mounted by the casing (1, 3, 11), such that it can be rotated about a longitudinal axis of the piston rod (4).

7. The administering apparatus as set forth in any one of the preceding four claims, wherein the piston rod (4) comprises at least one row of teeth (6; 7) with which at least one engagement element (8a; 8b) of the blocking means (8) engages.

8. The administering apparatus as set forth in any one of the preceding claims, wherein the casing (1, 3, 11) forms a linear guide for the dosage setting member (9), with which the dosage setting member (9) engages.

9. The administering apparatus as set forth in the preceding claim, wherein:

the casing (1, 3, 11) comprises at least a front casing section (1, 3) and a rear casing section (11), which can be detachably connected to each other;

said front casing section (1, 3) contains the reservoir (2) and forms said linear guide for the dosage setting member (9);

and said rear casing section (11) comprises the dosing and drive element (12).

10. The administering apparatus as set forth in any one of the preceding claims, wherein a cannula of at most 30 gauge, preferably a 31 or 32 gauge cannula, or a cannula having a combination of outer and inner diameter not specified in ISO 9626, having an outer diameter of 320 μm at most, forms an infusing part of the injection apparatus.

11. A reservoir module for an administering apparatus as set forth in any one of the preceding claims, said reservoir module comprising:

a) a front casing section (1, 3) of the administering apparatus, comprising a reservoir (2) for a product which can be delivered and a connecting means (3d, 20, 21) for connecting to a rear casing section of the administering apparatus;

b) a piston which is accommodated in said reservoir (2) such that it can be shifted in an advancing direction towards a reservoir outlet, in order to deliver product;

c) a piston rod (4) which is mounted by the front casing section (1, 3), such that it can be rotated about its longitudinal axis (L), and comprises a thread;

d) and a dosage setting member (9) which is in threaded engagement with the piston rod (4) and is guided by the front casing section (1, 3), such that a rotational movement of the piston rod (4) about its longitudinal axis moves said dosage setting member (9) counter to the advancing direction;

e) wherein the piston rod (4) comprises a connecting section (4a) for coupling to a dosing and drive element of the administering apparatus, and wherein said connecting section (4a) is formed such that the coupling between the piston rod (4) and the dosing and drive element of the administering apparatus allows the dosing and drive element and the piston rod (4) to shift relative to each other along the longitudinal axis (L) of the piston rod (4) and prevents the dosing and drive element and the piston rod (4) from rotating relative to each other about the longitudinal axis (L) of the piston rod (4).

12. The reservoir module as set forth in the preceding claim, wherein the front casing section (1, 3) comprises a sleeve-shaped reservoir part (1) comprising the reservoir (2) and a sleeve-shaped mechanism holder (3), which are produced separately and detachably or non-detachably connected to each other, wherein said mechanism holder (3) holds the piston rod (4) and guides the dosage setting member (9).

13. The reservoir module as set forth in any one of the preceding claims, wherein said reservoir module (10) is a disposable module, which is provided to be exchanged in its entirety once the reservoir (2) has been emptied.

14. A system consisting of an administering apparatus as set forth in any one of claims 1 to 10 and at least one reservoir module as set forth in any one of claims 11 to 13 which is provided as an exchange module for a reservoir module forming a part of said administering apparatus and is likewise formed as set forth in any one of claims 11 to 13.

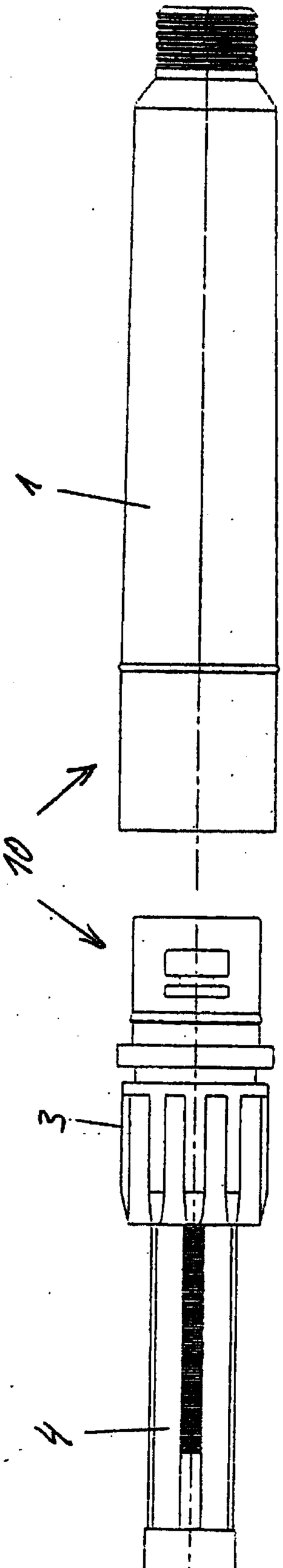

Fig. 1

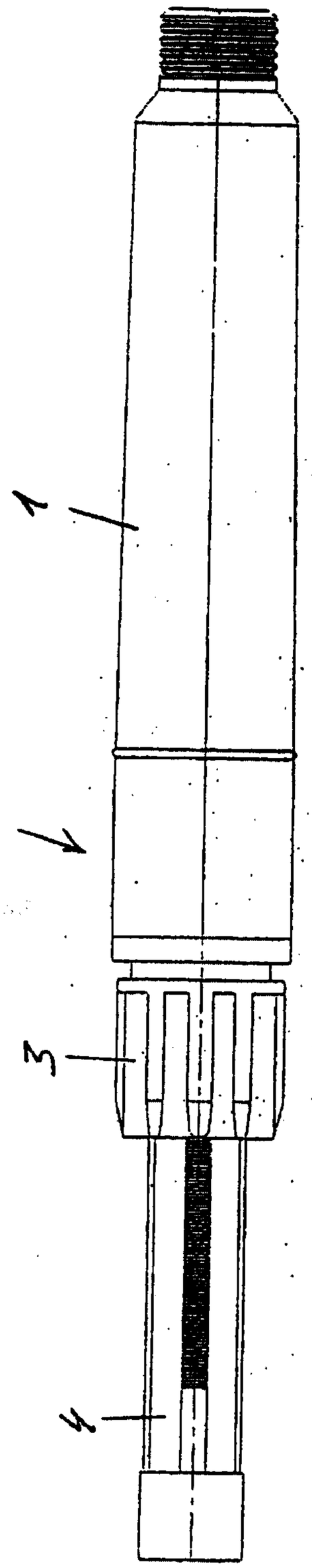

Fig. 2

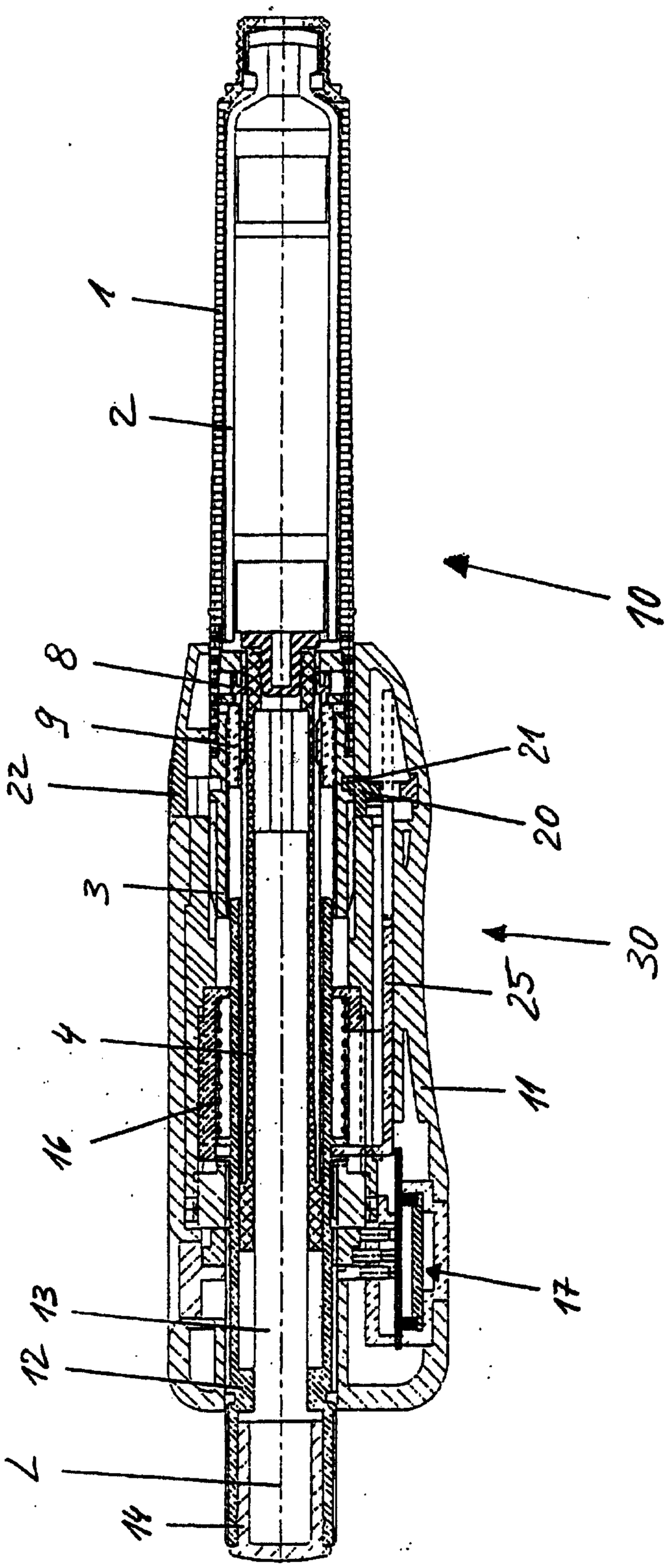

Fig. 3

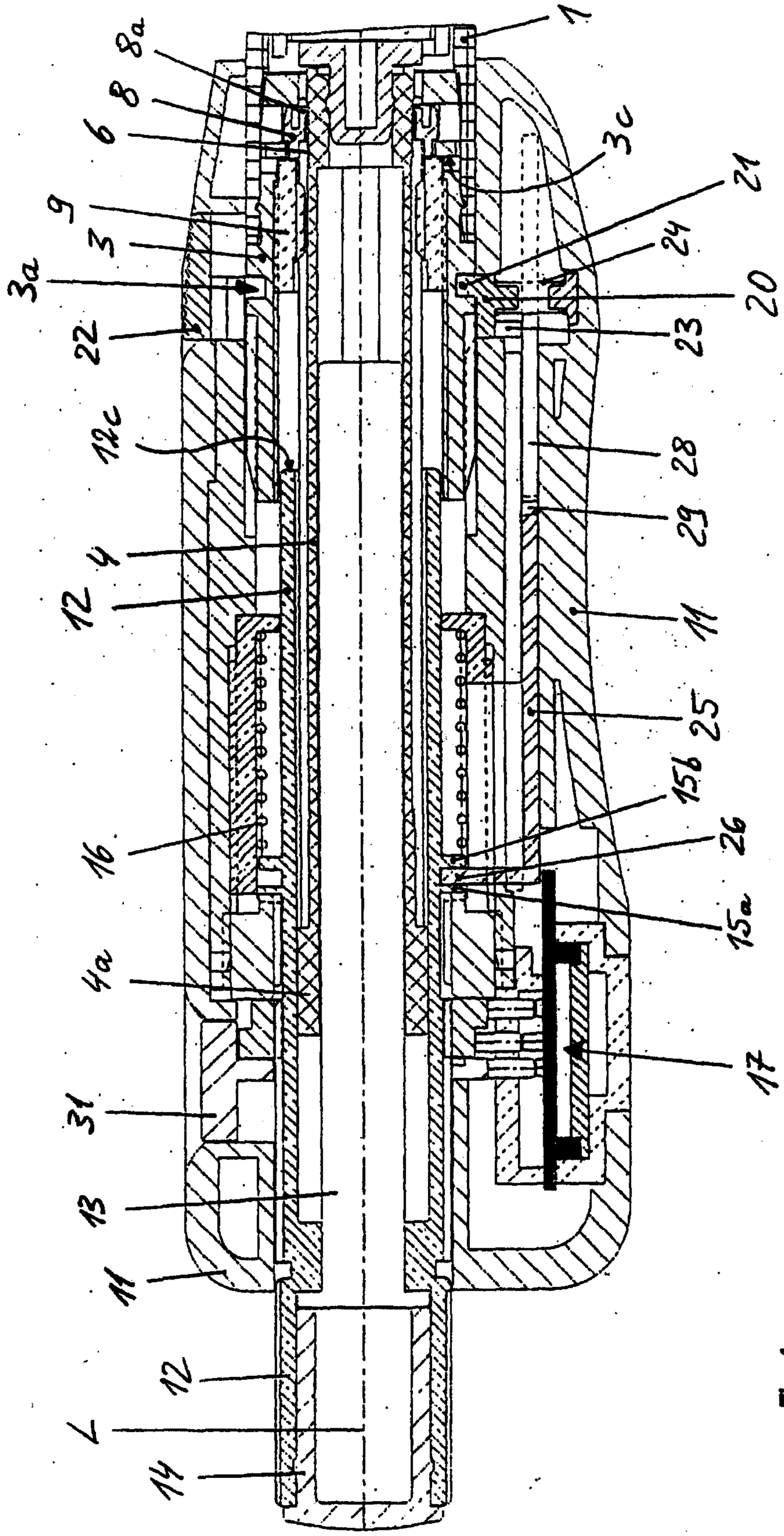
1
8a
8
6
3c
21
9
3
24
3a
20
22
23
12c
28
29
4
12
11
25
15b
16
26
15a
4a
17
31
13
11
12
7
14

Fig. 4

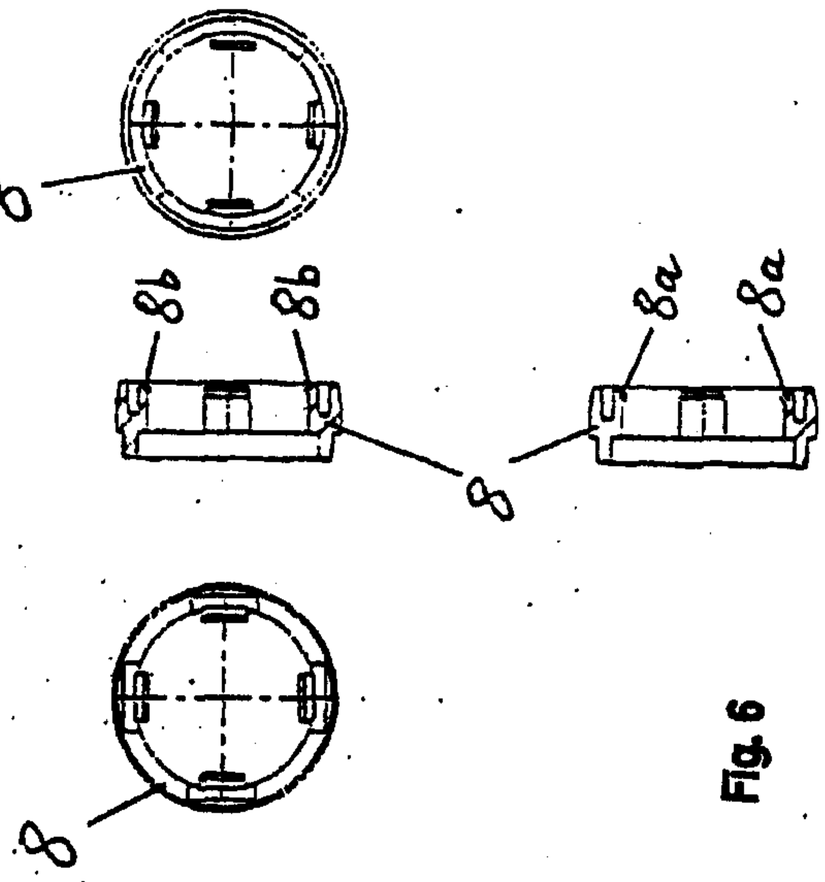

Fig. 6

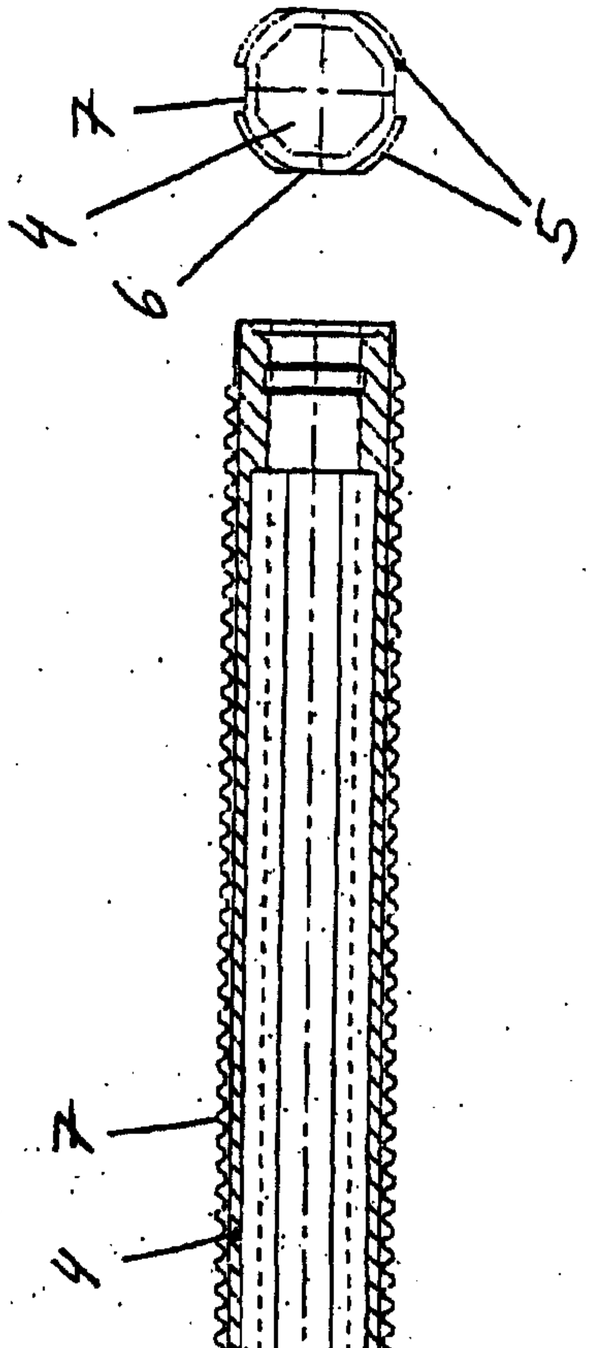

Fig. 7

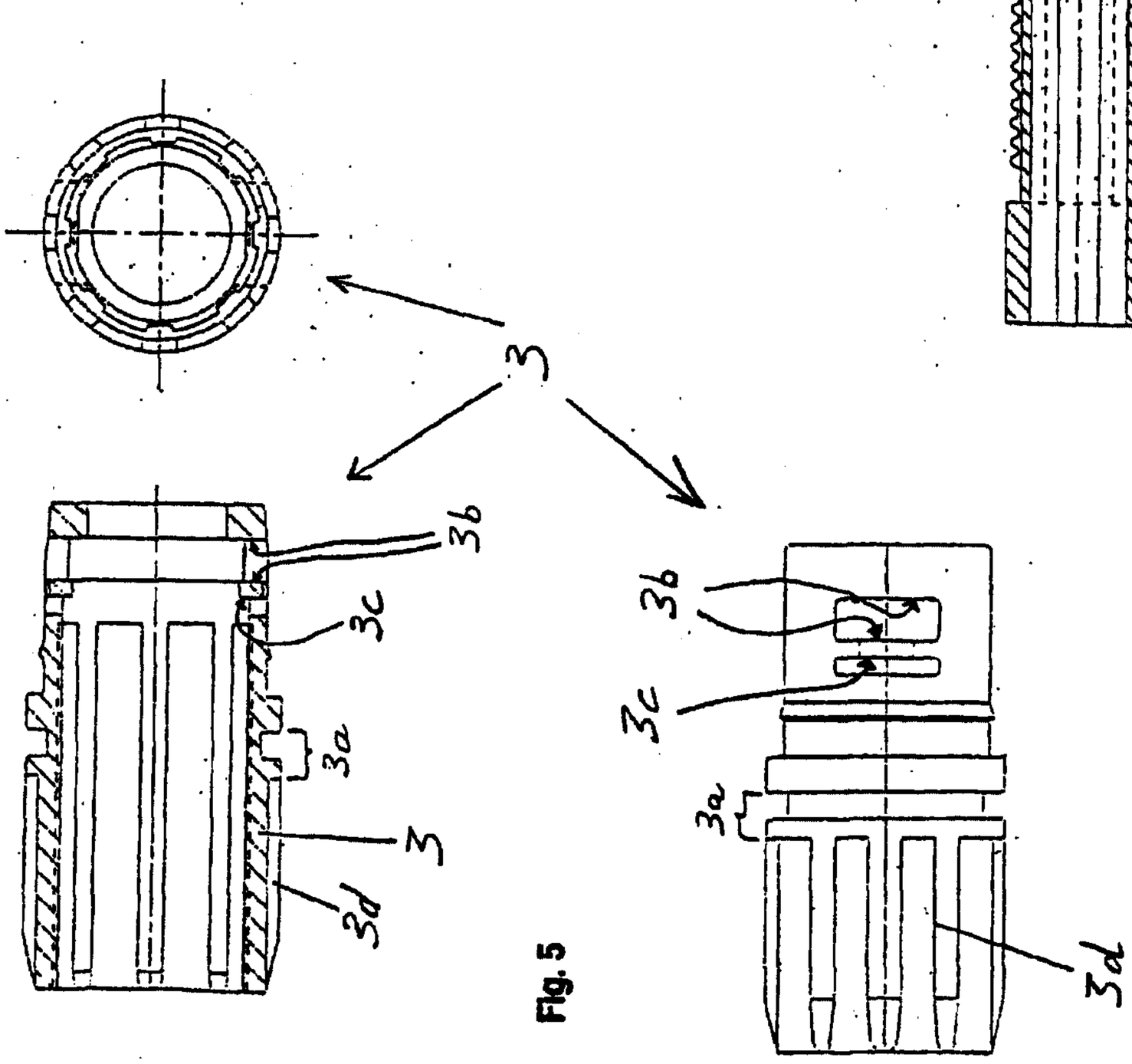

Fig. 5

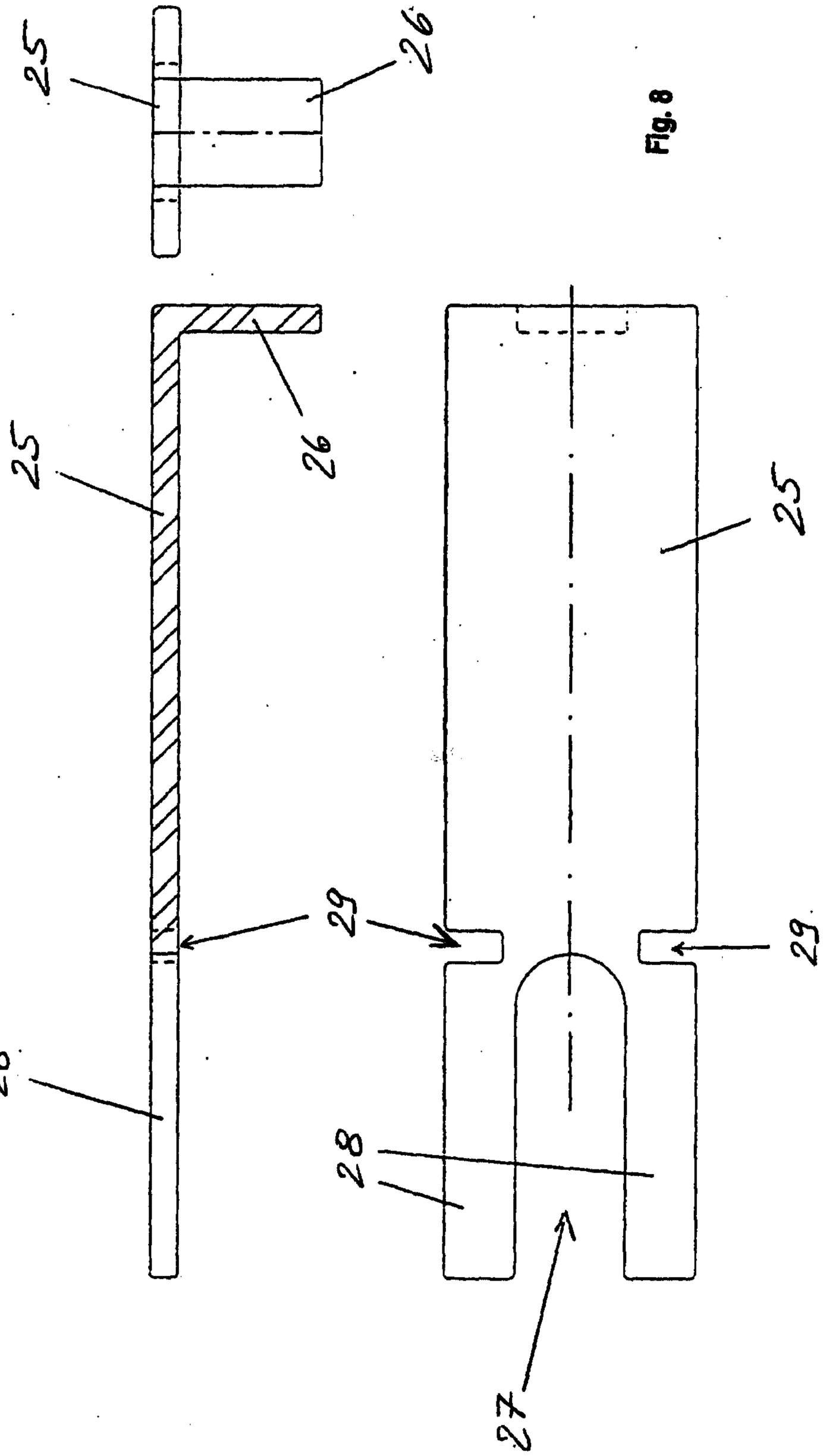

Fig. 8

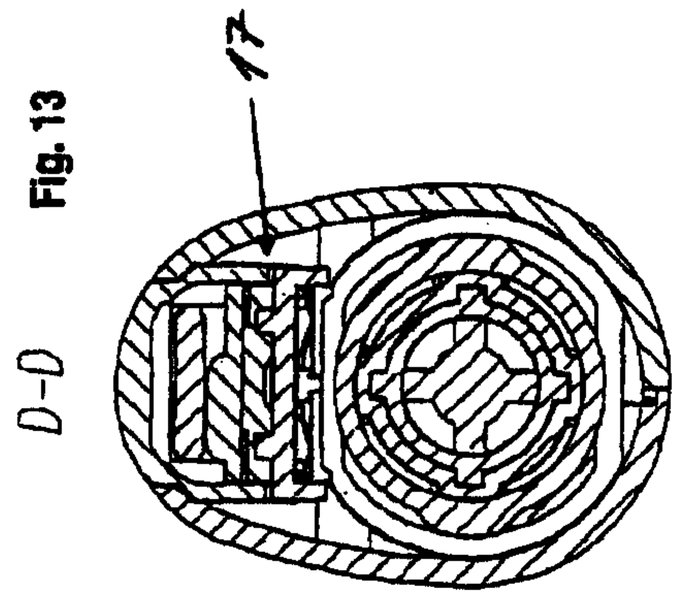

Fig. 13

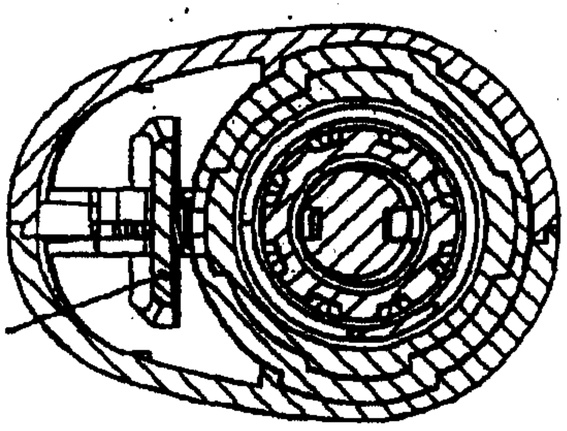

Fig. 12

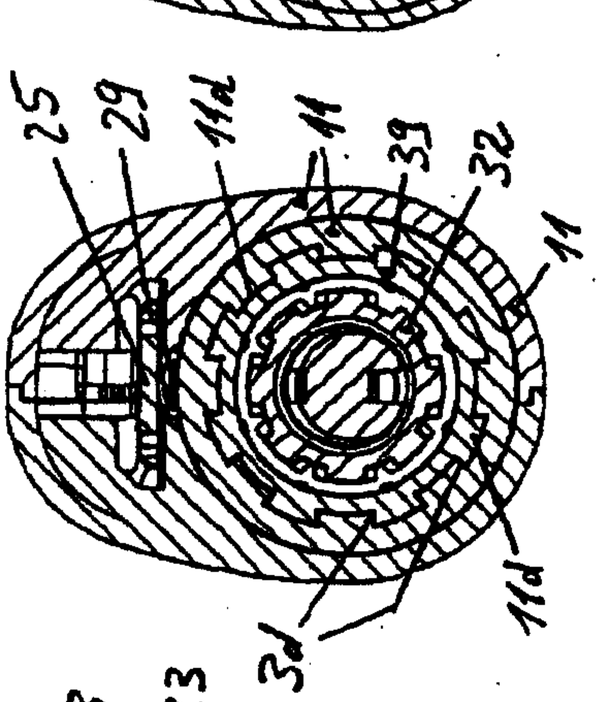

Fig. 11

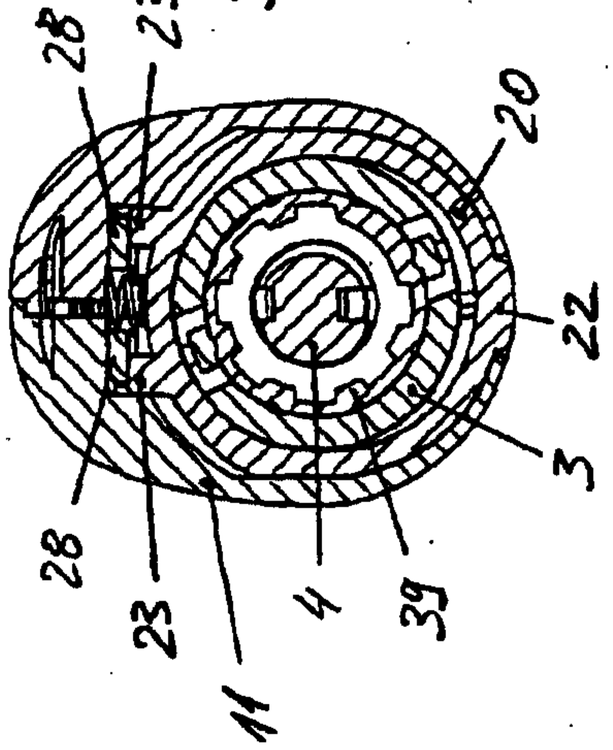

Fig. 10

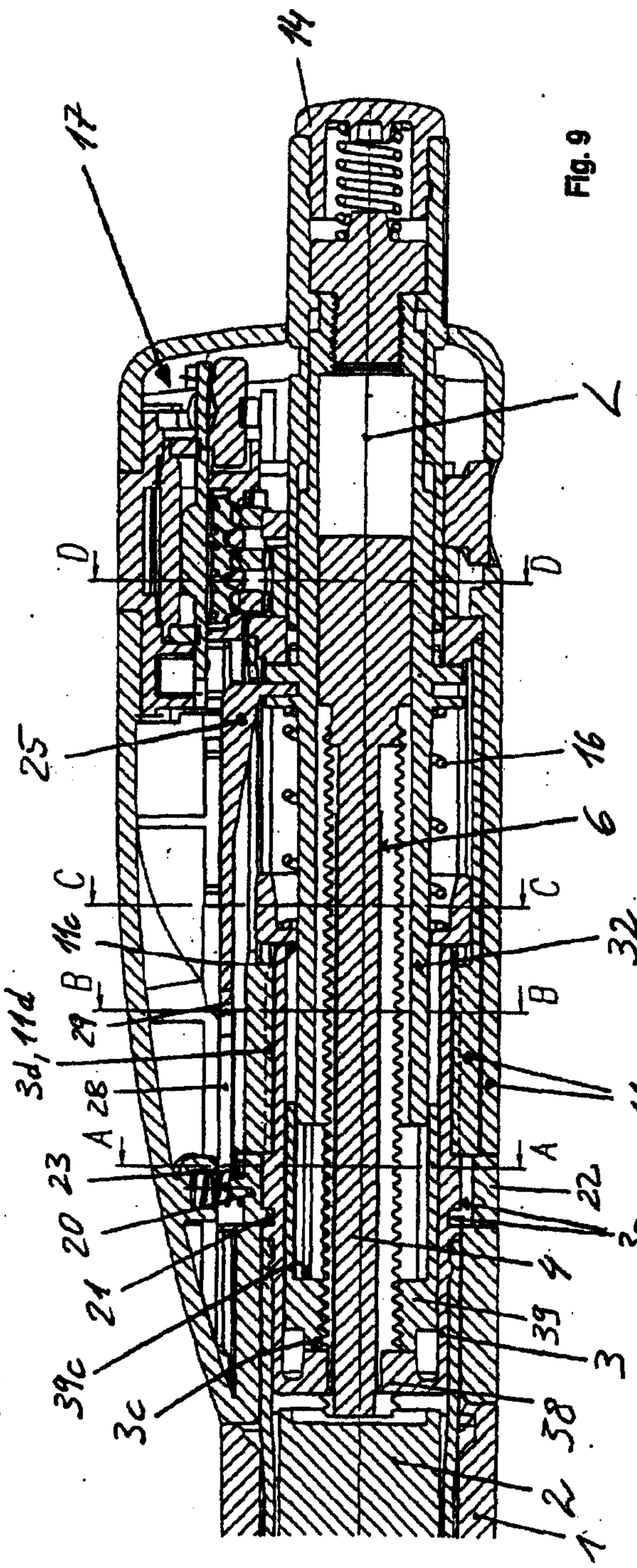

Fig. 9

Fig. 14

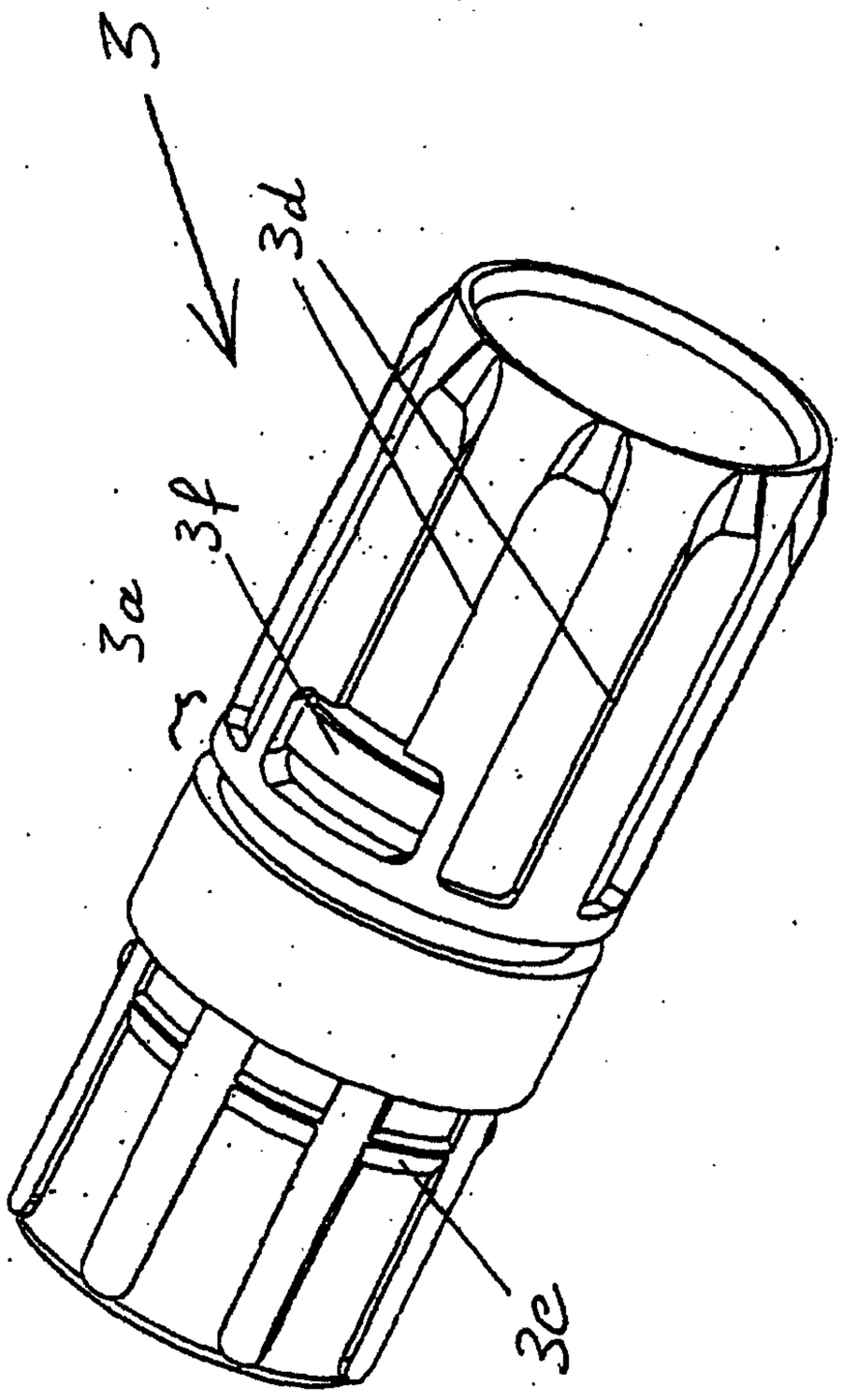

Fig. 15

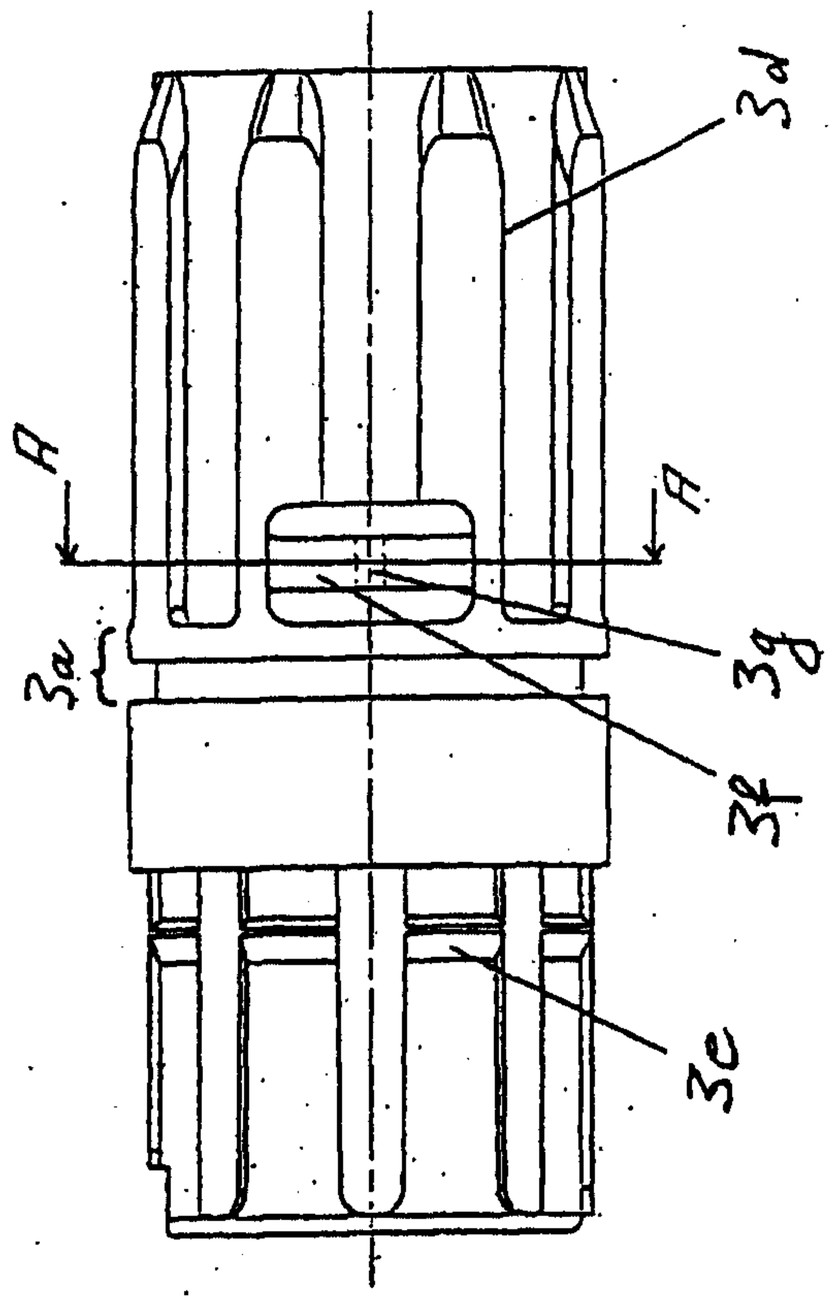

Fig. 16

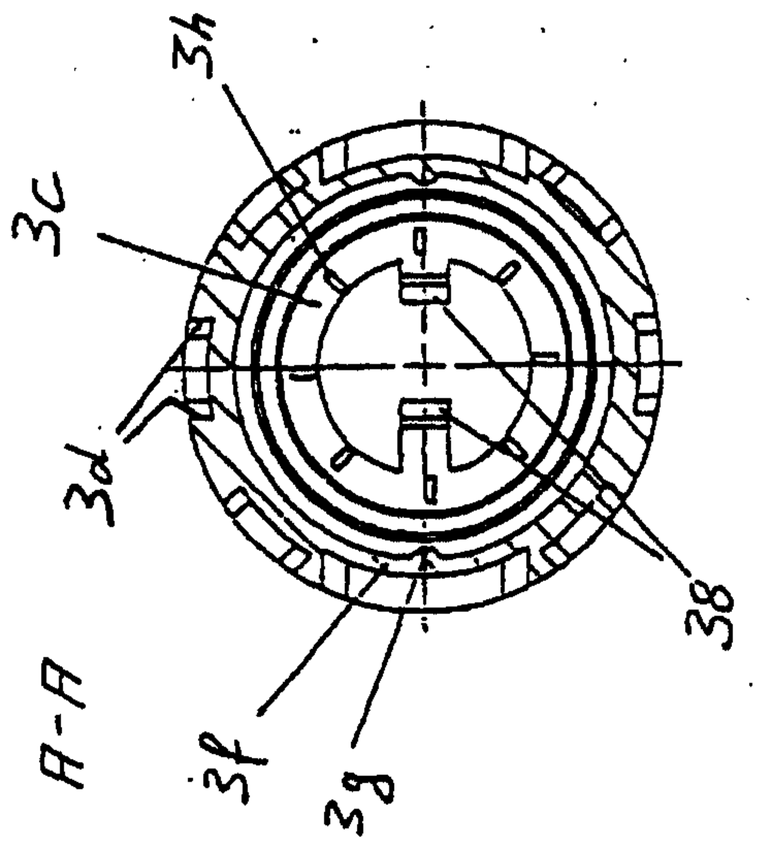

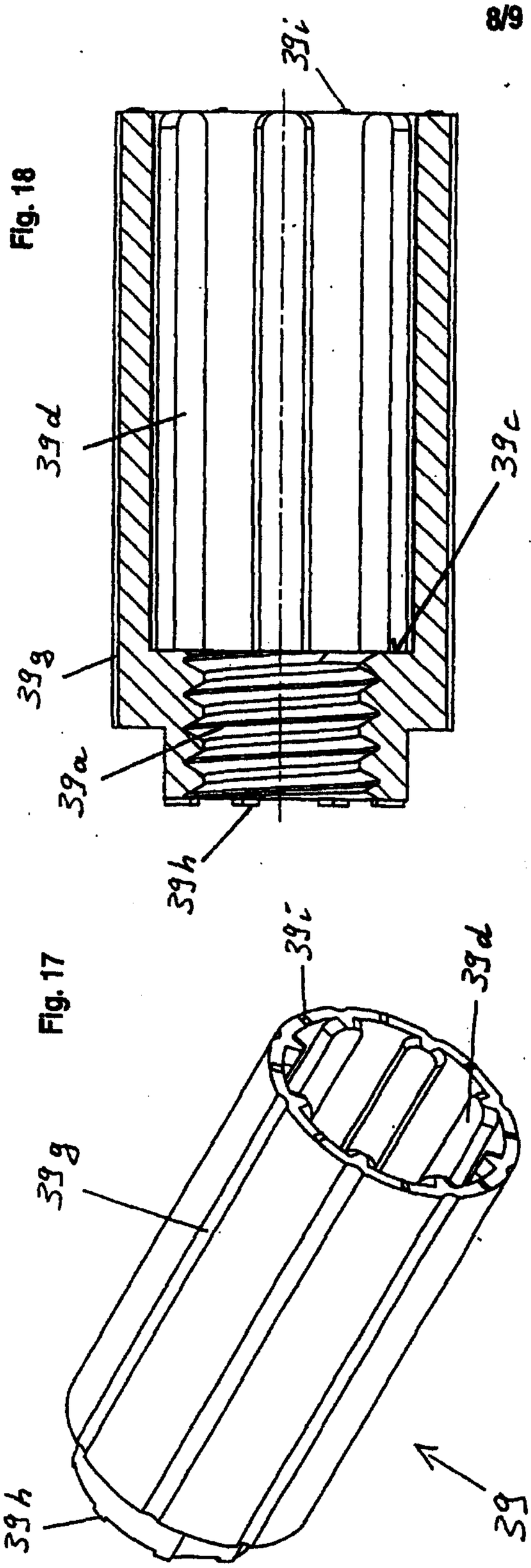

Fig. 17

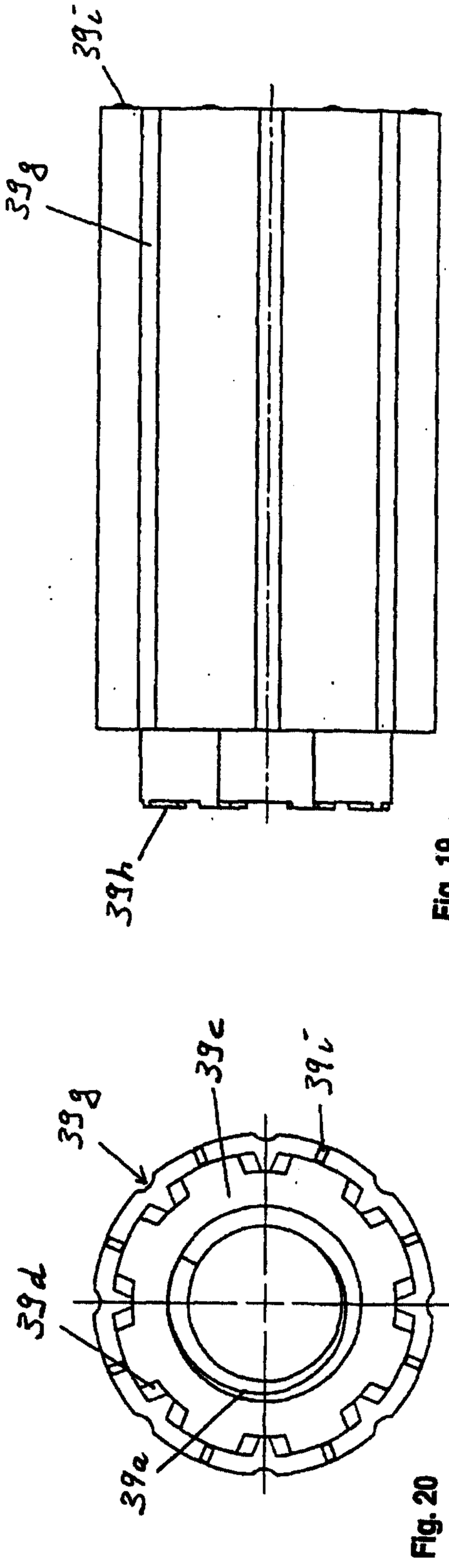

Fig. 19

Fig. 20

WO 03/011371

PCT/CH02/00410

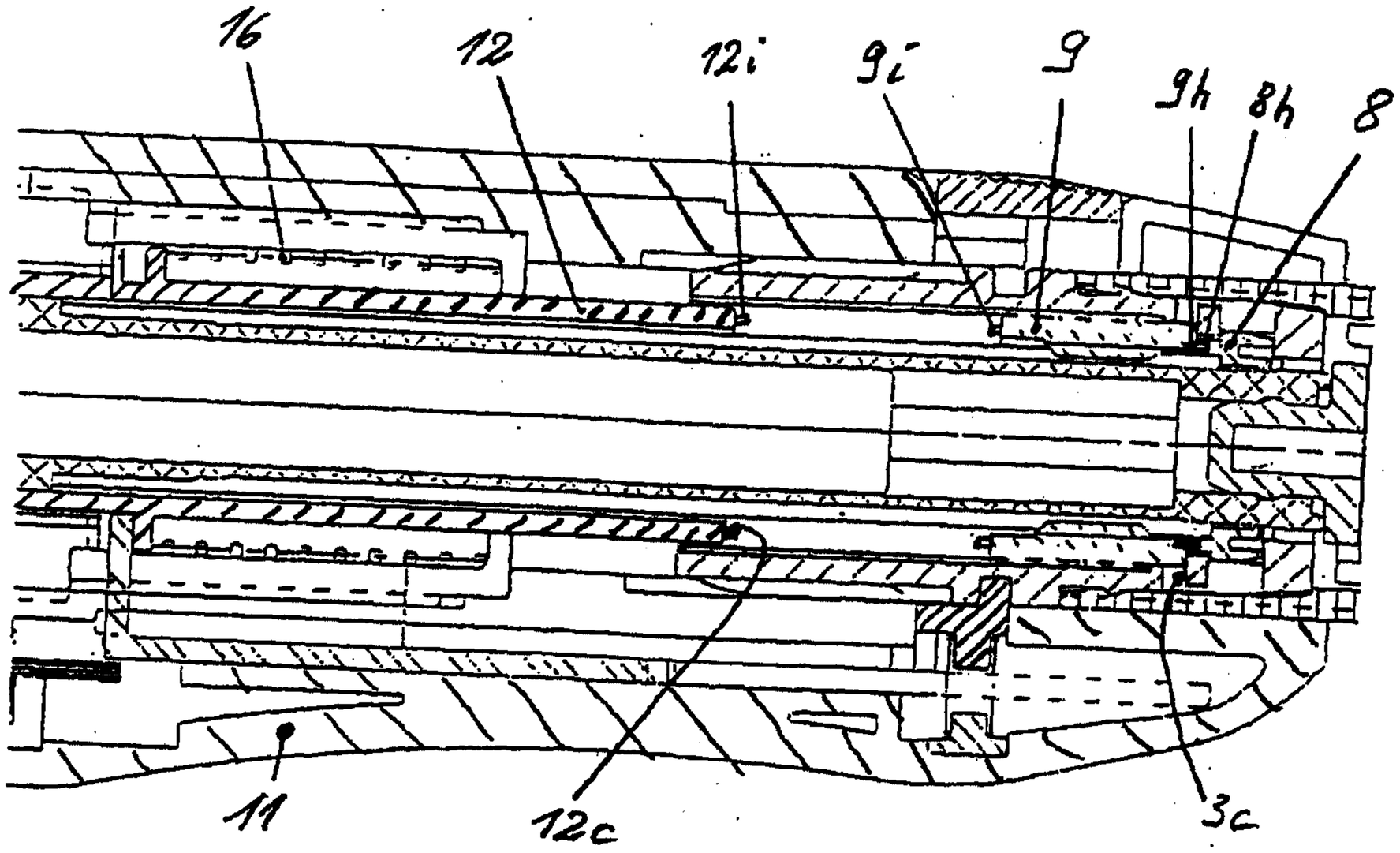

Fig. 21

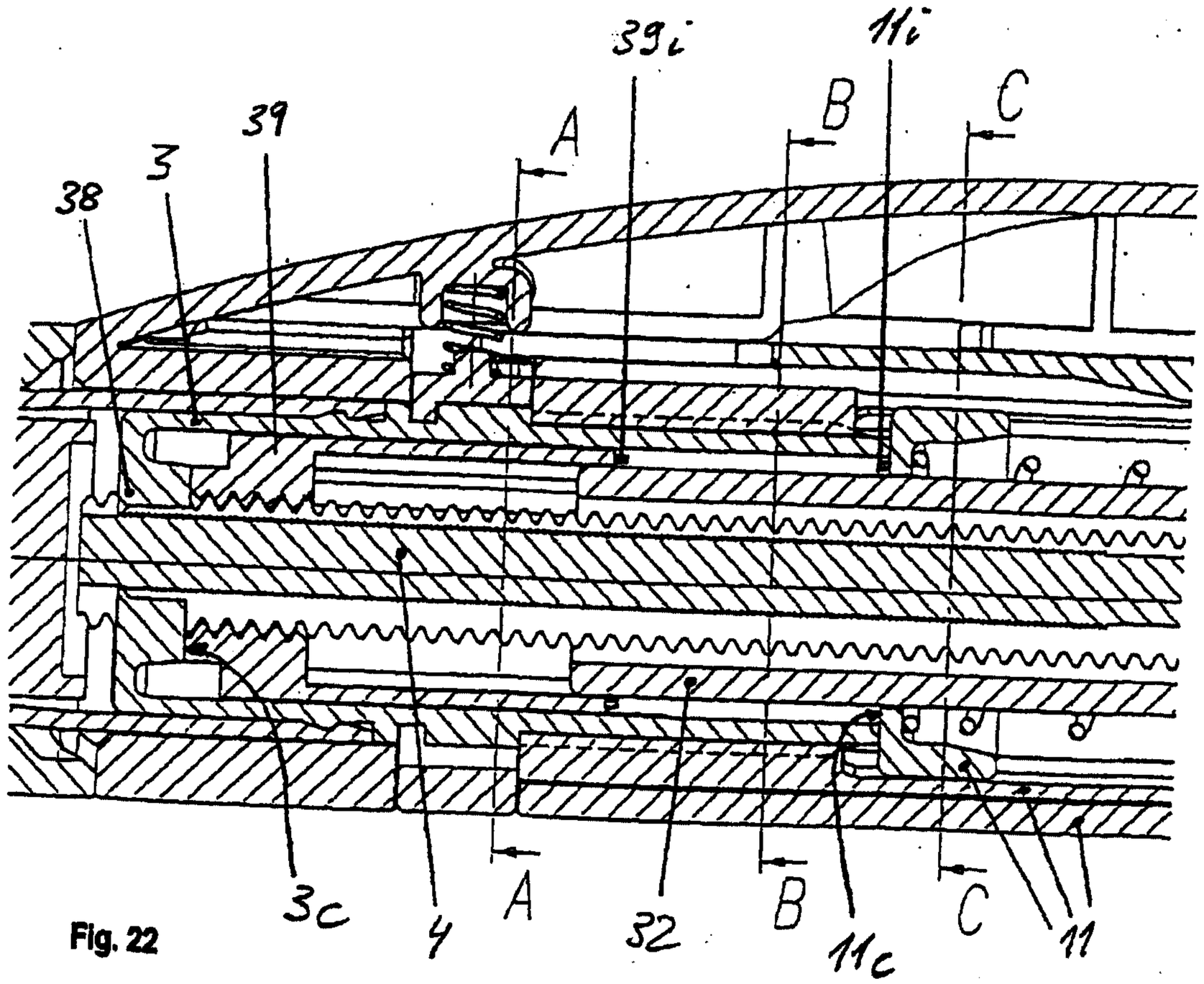

Fig. 22