33-244. OR 2,161,303 SR

Search Room

June 6, 1939. C. C. LOOMIS 2,161,303

GUN SIGHT

Filed Dec. 19, 1936

Fig. 1

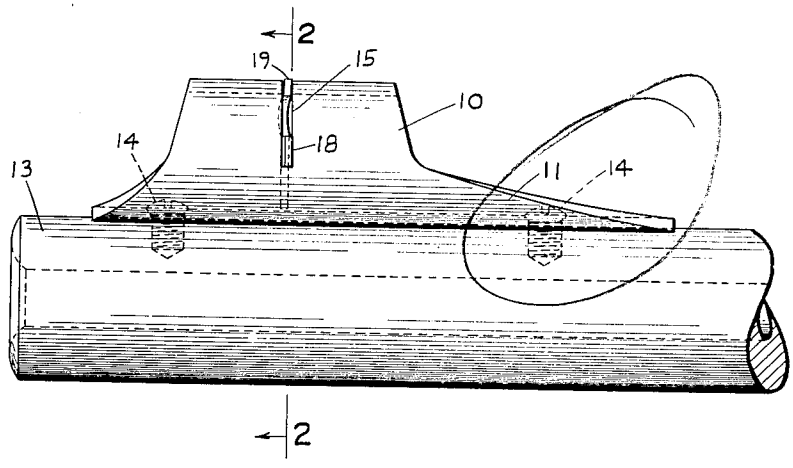

Fig. 2

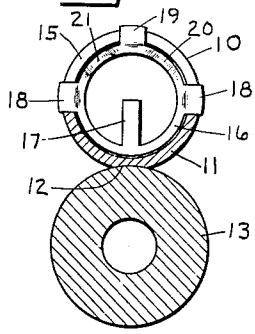

Fig. 3

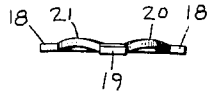

1624

+544

INVENTOR.
CRAWFORD C. LOOMIS.
BY
ATTORNEY

1420

2

Search Room

Patented June 6, 1939

2,161,303

UNITED STATES PATENT OFFICE

2,161,303

GUN SIGHT

Crawford C. Loomis, Ilion, N. Y., assignor to Remington Arms Company, Inc., a corporation of Delaware

Application December 19, 1936, Serial No. 116,771

1 Claim. (Cl. 33—47)

This invention relates to sights for firearms, and particularly to front sights of the so-called "hooded" type.

Sights of this type comprise a tubular hood adapted to house the sighting element, protecting the sighting element from accidental displacement and likewise shielding it from such direct light as would be reflected or refracted in such a manner as to interfere with the proper use of the sight. The tubular hood is usually integral with or secured to a suitable base which is in turn secured to the gun barrel.

The sighting element is a separate member, variously inserted, supported and held within the tubular shield. It is customary to provide a series of sighting elements, each with a sight surface differing from the others; thus enabling the shooter to select a sight surface adapted to particular conditions or to his particular tastes. Such sight elements are inserted into the hood either through a transverse slot or through one end of the hood, and various rather complicated means have been provided for enabling the insertion of a sighting element, insuring that it is properly positioned in the hood and securing it against accidental displacement from correct position.

The growing popularity of hooded front sights has given rise to a need for a simple and inexpensive hooded sight provided with replaceable sighting elements or reticules, the whole being constructed and assembled in a simple and inexpensive manner without sacrifice of accuracy. The present invention contemplates a sight of this character.

In the drawing:

Fig. 1 is an enlarged fragmentary side elevation of the front end of a gun barrel having secured thereto a sight made in accordance with the present invention.

Fig. 2 is a transverse section on the line 2—2 of Fig. 1, showing a typical reticule embodying the present invention in place in the hood.

Fig. 3 is an enlarged top view of a reticule embodying the invention.

The sight comprises a tubular portion or hood 10 which in the form selected for purpose of illustration includes a base portion 11, said base portion projecting a considerable distance to the rear and a shorter distance forward from the hood proper. The underside of the base 11 is arcuately ground as shown at 12 to fit the arcuate surface of the cylindrical barrel 13 to which the sight is secured by suitable means such as screws 14. Substantially midway of its length the hood 10 is slotted transversely from the top, the slot 15 constituting about one-half the circumference of the tube. It should be noted that the slot is a simple transverse cut, without longitudinal projections, bevels or other additional parts or surfaces. Said slot 15 is adapted to receive a sight member or reticule which, according to the present invention, is held in the slot and in proper relation to the hood by its own resilience. The reticule illustrated comprises a ring 16 of a diameter which is equal to or slightly less than the interior diameter of the hood 10, so that when the reticule is in place its periphery is substantially in alignment with the interior surface of the hood. A sight surface projects inwardly from any desired portion of the reticule ring 16. In the form illustrated, the sight surface is a post 17 projecting upwardly from the bottom of the ring, but it will be understood that any other desired form of sight surface may be provided. Projecting outwardly from the periphery of ring 16 are lateral ears or lugs 18 and a vertically disposed ear or lug 19. When the reticule is properly inserted in the hood slot 15 the lower edges of ears 18 contact the margins of said slot, thus limiting the downward movement of the reticule.

The invention contemplates that the reticule shall be held against lateral and/or upward displacement in the hood by its own resilience. To this end, in the form of the invention selected for the purpose of illustration, the reticule is made of somewhat resilient metal, and the portions of the ring 16 between one or both of the laterally projecting ears 18 and the upwardly extending ear 19 are displaced from the plane of the ring on smooth arcs of a relatively large radius, the displaced portions being clearly shown as 20 and 21 (Fig. 3). As the reticule is inserted in the slot 15 the displaced portions 20 and 21 spring back substantially into the plane of the ring. As the reticule reaches its final position the exterior diameter of the ring being equal to or slightly less than the interior diameter of the hood these portions clear the metal of the hood and, due to the resilience of the ring, spring out of the plane of the ring and engage the interior surface of the hood adjacent slot 15. The reticule is thus held correctly positioned vertically and laterally, the lower edges of the ears 18 preventing abnormal downward displacement and the margins of the tube-engaging portions 20 and 21 preventing both vertical and longitudinal displacement against a considerable force. The reticule, however, is easily removed by grasping the ears 18 which, as illustrated, project outward slightly from the

hood interior. When an upward pressure is exerted on these ears, the displaced portions 20 and 21 are cammed back into the plane of the ring and into alignment with slot 15 due to the camming engagement of their arcuate periphery with the arcuate interior surface of the hood. Means have thus been provided for removably locating the reticule correctly within the hood without the assistance of any parts other than the hood and reticule themselves.

The form of the invention shown and described is to be understood as illustrative only, the invention being susceptible to embodiment in many other forms, all falling within the scope of the appended claim, which is to be broadly construed.

What is claimed is:

A front sight for firearms comprising a tubular hood, there being a planar transverse slot in said hood, a reticule comprising a planar resilient ring having an exterior diameter substantially equal to the interior diameter of said tube and adapted for insertion in said tube through said planar slot therein; and means for yieldingly securing said reticule in place in said tube, said means comprising a portion of said ring integral therewith and struck laterally from the plane thereof and adapted to be moved by the resilience of said ring into engagement with the interior periphery of said tube as said reticule moves transversely of said tube into correct position therein.

CRAWFORD C. LOOMIS.