(19) Europäisches Patentamt
European Patent Office
Office européen des brevets

(11) EP 0 811 812 B1

(12) **EUROPEAN PATENT SPECIFICATION**

(45) Date of publication and mention of the grant of the patent:
20.03.2002 Bulletin 2002/12

(51) Int Cl.[7]: **F24J 3/00**

(21) Application number: **97108847.1**

(22) Date of filing: **03.06.1997**

(54) **Viscous heater**

Wärmeerzeuger mit viskoser Flüssigkeit

Générateur de chaleur à fluide visqueux

(84) Designated Contracting States:
DE FR GB

(30) Priority: **04.06.1996 JP 14193896**

(43) Date of publication of application:
10.12.1997 Bulletin 1997/50

(73) Proprietor: **Kabushiki Kaisha Toyota Jidoshokki**
Kariya-shi, Aichi-ken (JP)

(72) Inventors:
- **Ban, Takashi, c/o Kabushiki Kaisha**
  Kariya-shi, Aichi-ken (JP)
- **Mori, Hidefumi, c/o Kabushiki Kaisha**
  Kariya-shi, Aichi-ken (JP)
- **Yagi, Kiyoshi, c/o Kabushiki Kaisha**
  Kariya-shi, Aichi-ken (JP)
- **Hirose, Tatsuya, c/o Kabushiki Kaisha**
  Kariya-shi, Aichi-ken (JP)

(74) Representative: **Hoeger, Stellrecht & Partner**
Uhlandstrasse 14 c
70182 Stuttgart (DE)

(56) References cited:
EP-A- 0 361 053
DE-U- 9 418 815
FR-A- 2 266 122
US-A- 4 030 406
US-A- 4 664 068

Note: Within nine months from the publication of the mention of the grant of the European patent, any person may give notice to the European Patent Office of opposition to the European patent granted. Notice of opposition shall be filed in a written reasoned statement. It shall not be deemed to have been filed until the opposition fee has been paid. (Art. 99(1) European Patent Convention).

EP 0 811 812 B1

Printed by Jouve, 75001 PARIS (FR)

Description

BACKGROUND OF THE INVENTION

1. Field of the Invention

[0001] The present invention relates to a viscous heater, wherein a viscous fluid is subjected to a shearing force for generating heat, which is subjected to a heat exchange with respect to a recirculating fluid in a heat emission chamber and which is a heat source for a heating system.

2. Description of Related Art

[0002] The Japanese Unexamined Utility Model Publication No. 3-98107 discloses a viscous heater of a capacity controllable type, wherein a front housing and a rear housing are arranged to face with each other so that a heat generating chamber and a water jacket located around the heat generating chamber are formed by the front and rear housings. The water jacket is provided with an inlet to introduce the recirculating fluid from the outside heating system into the water jacket and an outlet to pass the recirculating fluid into the outside heating system from the water jacket. A drive shaft is rotatably supported by the housing via bearing units, while a rotor is fixedly connected to the drive shaft, so that the rotor is rotated in the heat generating chamber. The inner surface of the heat generating chamber and the outer surface of the rotor, which are provided with labyrinth grooves, are located adjacent to each other so that a gap is formed therebetween for storing a silicone oil as a viscous fluid.

[0003] The viscous heater of the above mentioned '107 patent is provided with an upper diaphragm cover and a lower diaphragm cover located below the housings. A diaphragm is arranged between the upper and the lower covers, so that a control chamber is formed between the upper cover and the diaphragm. The heat generating chamber is, on one hand, opened to the atmosphere via a vent hole formed at top ends of the front and the rear housings and is opened to the control chamber via communication pipes connected to the upper and the lower covers, on the other hand. Furthermore, a manifold vacuum is opened to the diaphragm, while the diaphragm is urged by a spring. As a result, a displacement of the diaphragm, i.e., a change in an inner volume of the control chamber, which corresponds to a difference between the vacuum force and the spring force, is obtained.

[0004] In the viscous heater incorporated in the heating system for a vehicle, a kinematic connection of the drive shaft with a crankshaft of an internal combustion engine causes the rotor to be rotated in the heat generating chamber, so that the viscous fluid is subjected to shearing between an inner surface of the heat generating chamber and an outer surface of the rotor, thereby generating heat. The heat generated in the viscous fluid is subjected to a heat exchange with the recirculating fluid in the water jacket, so that the recirculating fluid is heated and can be used as a heating source for the heating system for the vehicle.

[0005] The capacity control in the viscous heater in the '107 patent is as follows. Namely, in a situation that the effect of the heating is excessive, a manifold vacuum is opened to the diaphragm, which causes the diaphragm to be moved downwardly, so that the volume of the control chamber is increased. As a result, the viscous fluid in the heat generating chamber is recovered to the control chamber, so that a heat generating amount in a gap between the inner surface of the heat generating chamber and the outer surface of the rotor, which are faced with each other, is reduced, thereby weakening the effect of the heating. Contrary to this, in a situation that the effect of the heating is insufficient, an outside air is connected to the diaphragm via a pressure control hole, which causes the diaphragm to be moved upwardly by the force of the spring, so that the volume of the control chamber is decreased. As a result, the viscous fluid in the heat control chamber is issued to the heat generating chamber, so that a heat generating amount in the gap is increased, thereby strengthening the effect of the heating.

[0006] In the above structure of the viscous heater, irrespective of a fact that it is a constant capacity type or a variable capacity type, a gap between the inner surface of the heat generating chamber and an outer surface of the rotor, which are axially faced with each other, is evenly formed between the central area and the peripheral area. This structure makes it difficult to ensure that the heating system is quickly warmed up during a start-up condition. Namely, in an operation of the viscous heater, a heat generating amount L due to the shearing of the viscous fluid at a front and a rear surfaces, which are axially spaced, is expressed by the following equation

$$L = \pi\mu\omega R^4/\delta,$$

where μ is a viscosity coefficient of the viscous fluid, R is a diameter of a rotor, δ is an axial length of the heat generating gap between the inner surface of the heat generating chamber and the outer surface of the rotor and ω is an angular velocity of the rotor. From the above equation, it is clear that the smaller the gap is, higher the heat generating capacity becomes.

[0007] In the heat generating gap between the inner surface of the heat generating chamber and the outer surface of the rotor, not only the viscous fluid but also air, necessarily entrained during the assembly, is included. From a stopped condition, where the viscous heater is by its own weight located at the bottom of the gap, the electromagnetic clutch is brought into an operation so that a rotating movement causes a centrifugal force to

be generated in the viscous fluid in the heat generating gap formed axially between the inner surface of the heat generating chamber and the outer surface of the rotor. However, in the structure of the heat generating gap of a small and an even thickness along the entire region, a quick generation of the centrifugal force in the viscous fluid is less likely. As a result, a quick expansion of the viscous fluid from the bottom portion to the entire part of the heat generating gap can not be obtained.

[0008] On the other hand, an increase in the axial width of the gap causes the heat generating capacity to be reduced as will be easily understood from the above equation as to the heat generating amount L, resulting in a reduction in the warming-up speed when the viscous heater is brought into the operation.

[0009] Furthermore, in the above type of the viscous heater of the above mentioned construction, a recovery of the viscous fluid from the heat generating chamber to the control chamber causes a new air to be introduced into the heat generating chamber via a vent hole. This recovery would otherwise cause a vacuum to be generated in the heat generating chamber. As a result, the newly introduced air is contacted with the viscous fluid in the heat generating chamber, so that a moisture in the newly introduced air is absorbed by the viscous fluid, which can cause the latter to be quickly degraded.

[0010] From FR-A-22 66 122 a device is known for heating up a liquid which comprises a rotor arranged in a heating chamber and forming a gap between the walls of the heating chamber and the rotor. The liquid is flowing from an inlet port of the device through the gap to an outlet port and is subjected to a shearing force generated by the rotor. The width of the gap may be larger at a central portion than at a peripheral portion of the rotor.

[0011] A viscous heater used for a heating system for a vehicle is disclosed in EP-A-0 361 053. The heater includes a housing defining a heat generating chamber for storing therein a viscous fluid. The heating chamber is surround by a heat emission chamber in which a heating medium is recirculated. A rotor is located in the heat generating chamber so that a gap is formed between the rotor and the inner surfaces of the heat generating chamber. The rotor is driven by a drive shaft. Rotating the drive shaft and the rotor results in a shearing force which is generated in the viscous fluid between the rotor and the inner surfaces of the heat generating chamber.

SUMMARY OF THE INVENTION

[0012] An object of the present invention is to provide a viscous heater capable of obtaining an increased warm up speed when the heater is started.

[0013] Another object of the present invention is to provide a viscous heater capable of delaying the degradation of the viscous fluid, while keeping the speed of capacity control high.

[0014] Another object of the present invention is to provide a viscous heater capable of preventing the viscous fluid from absorbing moisture while applying a shearing force only to a small part of the viscous fluid, thereby suppressing a degradation of the viscous fluid.

[0015] According to the present invention, a viscous heater is provided, comprising:

a housing forming therein a heat generating chamber for storing therein a viscous fluid and a heat emission chamber which is located adjacent the heat generating chamber and in which a heating medium is recirculated;

a rotor located in the heat generating chamber so that a gap is defined between an outer surface of said rotor and an inner surface of the heat generating chamber; and

a drive shaft on which the rotor is mounted, whereby said rotor is integrally rotated with said shaft in the heat generating chamber and shearing force is generated in the viscous fluid between the outer peripheral part of said rotor and the inner surface of the heat generating chamber;

wherein the gap has a varied width in an axial direction such that the width of the gap at outer portion of said rotor is smaller than the width of the gap at a central portion of said rotor; and

wherein said housing assembly comprises a plate member having a pair of spaced end surfaces, one of which forms a part of the inner surface of the heat generating chamber, the other surface forming a part of an inner surface of the heat emission chamber and a housing member, which forms the remaining part of the inner surface of the heat generating chamber, said plate member having a machined portion at the inner surface of the heat generating chamber for creating the gap.

[0016] In this structure of the viscous heater, a larger amount of the silicone oil can be located at the central part of the heat generating gap prior to the start of the viscous heater, where the viscous fluid is moved to a bottom position of the gap due to its own weight. An application of a rotating movement to the rotor via an electromagnetic clutch or a pulley causes the rotor to be rotated in the heat generating chamber so as to instantly generate a centrifugal force in the viscous fluid just after the start of the viscous heater, resulting in a quick spread of the viscous fluid over the entire region.

[0017] Furthermore, in the structure of the viscous heater, the gap at the outer peripheral area is small where the peripheral speed is high. As a result, generation of a desired amount of a heat is maintained.

[0018] In short, regardless the types of the viscous heater, i.e., whether the viscous heater is of a fixed capacity type or of a variable capacity type, the structure of the viscous heater in claim 1 allows the viscous heater to be quickly warmed-up when it is started.

[0019] The employment of the structure of the housing constructed by the housing member and the plate member prevent the production of these parts from being complicated.
Furthermore, a simple machining on the outer surface of the plate can provide the gap. Thus, a reduction in production cost can be realized.

[0020] In the invention in claim 2, the housing is further provided with a sealingly closed storage chamber which is in communication with the central part of the heat generating chamber via a feed passageway and a recovery passageway.

[0021] In the structure, an inner temperature detecting means such as a bimetal member can be stored in the storage chamber, so that a control chamber for a variable capacity type viscous heater is constructed.

[0022] In the structure of claim 2, when an operation of the viscous heater is started, in addition to a generation of a centrifugal force, a Weissenberg effect is generated by a continuation of the rotating movement, so that a large amount of the viscous fluid is concentrated at the central part of the gap. As a result, in the viscous heater of a variable capacity type, degradation of the viscous fluid caused by a moisture content is suppressed, and a quick capacity control is obtained due to the fact that the viscous fluid is quickly recovered into the storage chamber via the recovery passageway. Furthermore, irrespective of the type of the viscous heater, i.e., whether or not that the viscous heater is of a fixed capacity type or of a variable capacity type, the viscous fluid can be moved quickly between the heat generating chamber and the storage chamber. Thus, a relatively large amount of viscous fluid and an amount of air which is inevitably entrained are stored in the storage chamber. Thus, the structure is advantageous in that a quick degradation of the viscous fluid is less likely since the air is mainly stored in the storage chamber and a shearing force is applied only to a small part of the viscous fluid.

[0023] In the invention in claim 3, said rotor has a machined portion at the outer surface for creating said gap with a varied axial width.

[0024] In this regard, the gap is obtained by machining one of the housing and rotor. A matching of the rotor at its outer surface can be easily done, thereby reducing the production cost.

[0025] In the invention in claim 5, the machined portion is of a tapered form forming the gap having the varied width. A machining of such a tapered surface is somewhat complicated.
However, this arrangement is desirable in that the viscous fluid can be easily spreaded along the entire surface.

[0026] In the invention in claim 6, the machined portion is of a stepped form forming the gap having the varied width. This structure is advantageous in that the machining is very easy, thereby reducing the production cost.

[0027] In the invention in claim 7, the varied width of said gap is continuously reduced from it central portion to the outer peripheral portion. This structure is advantageous in an effective spreading operation of the viscous fluid to the outer peripheral area of the heat generating gap.

BRIEF EXPLANATION OF ATTACHED DRAWINGS

[0028]

Fig. 1	is a longitudinal cross sectional view of a viscous heater according to the first embodiment of the present invention.
Fig. 2	is a partial view of Fig. 1 which illustrates a stepped construction of the inner wall of the heat generating chamber.
Fig. 3	is a longitudinal cross sectional view of a viscous heater according to the second embodiment of the present invention.
Fig. 4 and 5	are similar to Fig. 2 but illustrate a third and fourth embodiments of the present invention.

BRIEF DESCRIPTION OF PREFERRED EMBODIMENTS

[0029] Embodiments of the present invention will be explained with reference to attached drawings.

First Embodiment

[0030] In the first embodiment of the present invention, the viscous heater includes a front housing 1, an intermediate plate 2 and a rear housing 3, which are connected with each other by means of circumferentially spaced bolts 6 while an O-ring 4 is arranged between the front housing 1 and the rear plate 2 and a gasket 5 is arranged between the rear plate 2 and the rear housing 3.

[0031] The front housing 1 is, at its rear side, formed with a recess, which has ring shaped concentric stepped portions 1a directed axially forward of the housing 1. The rear plate 2 is, at its front side, formed with a recess, which, also, has ring shaped concentric stepped portions 2a directed axially rearward of the rear plate 2 and aligned with the stepped portions 1a of the front housing 1. As a result, an axially faced arrangement is obtained between the stepped portions 1a and 2a of the front housing 1 and the rear plate 2, so that a heat generating chamber 7 is formed therebetween.

[0032] Furthermore, the rear housing 3 is, at its front side, formed with a circular recess 3-1, while the rear plate 2 has a central projection 2-1, which extends axi-

ally rearwardly until the latter abuts the bottom surface of the recess 3-1 of the rear housing 3, so that an annular shaped water jacket WJ is formed between the rear plate 2 and the rear housing 3. An intake port member 8 is connected to the rear housing 3 at its rear side, so that heating water from a not shown heating system of a vehicle is introduced. In a similar way, an outlet port member (not shown) is connected to the rear housing 3 at its rear side, so that heating water, after being subjected to the heat exchange with the viscous fluid at the heat generating chamber 7, is taken out from the latter to the heating system.

[0033] The front housing 1 is formed with an axial bore 1-1 in which a shaft seal unit 9 is arranged so as to be adjacent the heat generating chamber 7. At a location in the bore 1-1 axially spaced forward from the shaft seal unit 9, a bearing unit 10 is arranged. A drive shaft 11 is inserted into the axial bore 1-1 via the shaft seal unit 9 and the bearing unit 10. The drive shaft 11 has an inner end on which a rotor 12 of a flat disk shape is fixedly connected, so that the rotor 12 rotates in the heat generating chamber 7. As a result, between an inner surface of the heat generating chamber 7 and an outer surface of the rotor 12, a gap is created, in which a silicone oil as a viscous fluid is stored. Due to the stepped arrangement of the inner recess 1a and 2a of the front housing 1 and the rear plate 2, which are faced with each other, the axial width of the gap is expressed by T at central zone of the heat generating chamber 7 and by t (<T) at a peripheral zone of the heat generating chamber 7. In other words, a continuous reduction of the axial width of the gap is obtained from the central zone to the peripheral zone of the heat generating chamber 7.

[0034] According to the viscous heater of the present invention, the rear plate 2 and the rear housing 3 cooperate to form a part of a housing for forming therein the water jacket WJ as well as the heat generating chamber 7, which makes the production of the parts easy. Furthermore, the mere machining of the stepped portions 1a and 2a is sufficient to obtain the heat generating gap, resulting in a reduction in the production cost.

[0035] In Fig. 1, the viscous heater of this embodiment is integrated with an electro-magnetic clutch MC, which is basically constructed by a pulley 14, a solenoid 15, a hub 18, a rubber member 19 of a ring shape, a flange member 20 and an armature 21. The pulley 14 is constructed by a pulley portion 14-1, an disk portion 14-2 faced with the armature 21 and an inner tubular portion 14-3, which is supported on a boss portion 1b of the front housing 1 via a bearing unit 13. The solenoid 15 is located in a rearwardly opened space between the pulley portion 14-1 and the inner tubular portion 14-3 and is fixedly connected to the front housing 1. The hub 18 is inserted to the drive shaft 11 via a key 17 and is fixed to the shaft 11 by means of a bolt 16. The hub 18 is, at its outer ring portion 18-1, connected to the flange portion 20 via the rubber member 19. The flange portion 20 is connected to the armature 21 via rivets 22. The pulley portion 14-1 of the rotor 14 is in kinematic connection with a crankshaft of an internal combustion engine, as a rotating movement source. As a result, a rotating movement from the internal combustion engine is transmitted to the rotor 14.

[0036] The armature 21 is usually located at a small distance from the disk portion 14-2 of the rotor when the solenoid 15 is under a de-energized condition, thereby preventing the rotating movement of the pulley 14 from being transmitted to the armature 21, i.e., the hub 18, to which the drive shaft 11 of the viscous heater is connected. During this dis-engaged condition of the electromagnetic clutch MC, the silicone oil is located in the heat generating gap at its central and a lower areas due to its own weight.

[0037] When the electromagnetic clutch MC is brought into an operation by energizing the solenoid 15, an electromagnetic force is generated in the solenoid 15, which causes the armature 21 to be moved toward the pulley 14 against the spring force until the armature 21 is in face to face contact with the disk portion 14-2 of the pulley 14. As a result, a rotating movement of the rotor 14 from the crankshaft of the internal combustion engine is transmitted to the hub 18 and to the drive shaft 11 and the rotor 12 on the shaft 11. The rotating movement of the rotor 12 causes a centrifugal force to be generated in the silicone oil, which allows the silicone oil to be spread to the entire part of the heat generating gap between the inner surface of the heat generating chamber 7 and the outer surface of the rotor 12. As a result, shearing of the silicone oil occurs at the gap, thereby generating a heat. The thus generated heat is subjected to a heat exchange with the water in the water jacket WJ, which is supplied to the heating system for heating the vehicle.

[0038] Furthermore, in the construction of the viscous heater according to the present invention, in the heat generating gap, the width t at the outer peripheral region is smaller than the width T at the central region. Due to this arrangement, an increased speed at the peripheral portion of the rotor 12 is combined with a reduced width of the heat generating gap, thereby obtaining a desired heat generating capacity.

[0039] In view of the above, according to the viscous neater in the first embodiment, an increased warming up speed is obtained, while the degradation of the silicone coil is delayed, thereby keeping a desired level of a heat generating capacity after a prolonged use of the device.

[0040] Fig. 3 shows a second embodiment of the viscous heater of the present invention, which is directed to a variable capacity type. In this embodiment, the housing is constructed by a front housing 31, a front plate 32, a rear plate 33 and a rear housing 34, which are connected with each other by means of a plurality of circumferentially spaced bolts 38, while a gasket 35 is arranged between the front housing 31 and the front plate 32, an O-ring 36 is arranged between the front

plate 32 and the rear plate 33, and a gasket 37 is arranged between the rear plate 33 and the rear housing 34.

[0041] As similar to the first embodiment in Fig. 1, the front plate 32 is, at its rear side, formed with a stepped recess 32a directed forwardly, while the rear plate 33 is, at its front side, formed with a stepped recess 33a directed rearwardly. Between the stepped recess 32a and 33a, which are oppositely recessed, a heat generating chamber 39 is formed. The front plate 32 is formed with a boss portion 32b which extend forwardly, so that the boss portion 32b is inserted to a central bore of the front housing 31.

[0042] The rear plate 33 is, at a location above a central axis, formed with a first recovery hole 33b and, at a location below the central axis, a first feed hole 33c. These first recovery hole 33b and the first feed hole 33c extend axially therethrough from the front surface to the rear surface of the rear plate 33.

[0043] The front housing 31 is, at its rear side, formed with an annular recess 31-1, which is faced with a front end surface of the front plate 32, so that a front water jacket FW as a front heat emission chamber is formed by the recess 31-1 between the front housing part 31 and the front plate 32. On the other hand, the rear housing 34 is formed with an inner annular rib 34a and an outer rib 34b, which are axially extended toward the rear plate 33. The outer rib 34b contacts with the gasket 37, so that an annular rear water jacket RW as a rear heat emission chamber is formed between the rear plate 33 and the rear housing part 34 at a location radially outward from the outer rib 34b. Furthermore, an annular control chamber CR, which functions also as a storage chamber, is formed between the rear plate 33 and the rear housing part 34 at a location radially inwardly from the outer rib 34b.

[0044] An inlet port and an outlet port, which are not shown, are connected to the rear housing part 34, so that these ports are in communication with the rear water jacket RW. As a result, an introduction of a heating water into the water jacket RW is done via the inlet port, and a removal of the heating water from the water jacket RW is done via the outlet port. Furthermore, the front and rear plates 32 and 33 form axially aligned sets of holes constructing water passageways 41 circumferentially spaced at locations between the bolts 38 which are adjacent with each other. Thus, communication is obtained between the front and rear water jackets FW and RW via these water passageways 41.

[0045] Inside the control chamber CR, a coil shaped bimetal member 42, a bimetal shaft 43 and a rotary valve 45 are arranged. The rotary valve 45 is in axial face-to-face contact with the rear plate 33. The bimetal shaft 43 has a front end fixedly connected to the rotary valve 45 and rear end rotatably connected to the rear housing part 34. The bimetal member 42 has a radially inner end fixedly engaged with the bimetal shaft 43 and a radially outer end fixedly engaged with the inner rib 34a of the rear housing part 34. The coil shaped bimetal member 42 is arranged in such a manner that a deformation of the bimetal member 42 occurs in accordance with the degree of the heating condition, i.e., the temperature of the heating water. A dish spring 44 is arranged between the rotary valve 45 and the inner rib 34a, so that the rotary valve 45 is urged toward the rear plate 33, so that the first recovery hole 33b and the first feed hole 33c are selectively closed or opened by the rotary valve 45 in accordance with the rotating position of the rotary valve 45. Namely, the rotary valve 45 is formed with a second recovery hole 45a and a second feed hole 45b, which are in communication with the first recovery hole 33b and the first feed hole 33c, respectively, in accordance with the angle of rotation of the rotary valve 45.

[0046] Furthermore, the front housing 31 includes a boss portion 31a, in which a shaft seal unit 46 is arranged. A bearing unit 40 is arranged in the boss portion 32b of the front plate 32, so that the bearing unit 40 is located axially inwardly. A drive shaft 47 is supported by the bearing unit 40 and the shaft seal unit 46. A rotor 48 of a flat disk shape is located in the heat generating chamber 39 and is fixedly connected to the shaft 47 in such a manner that the rotor 48 is rotated in the heat generating chamber 39. A relatively large amount of a silicone oil as a viscous fluid is stored in the control chamber CR. An amount of air is necessarily mixed in the silicone oil in the control member CR. The silicone oil is located in the heat generating chamber 39 at its bottom portion in such a manner that the silicone oil is filled in a gap formed between the inner surface of the heat generating chamber 39 and the outer surface of the rotor 49.

[0047] The drive shaft 47 is projected forwardly from the boss portion 31a of the front housing 31 and a pulley 49 is fixed to the end of the drive shaft 47 projected from the boss portion 31a by means of a bolt 50. The pulley 49 has an outer part 49-1 with grooves, to which a belt, (not shown) from a pulley on a crankshaft of an internal combustion engine, is engaged. As a result, a rotating movement from the crankshaft is transmitted to the pulley 49 and then to the drive shaft 47.

[0048] When the internal combustion engine is stopped, the silicone oil is, due to the effect of its own weight, moved downwardly in the heat generating gap. In the words, a large amount of oil is located at the central area around the axis of the drive shaft.

[0049] Starting the internal combustion engine causes the rotating movement of the crankshaft to be transmitted to the pulley 49, which causes the drive shaft 47 to rotate. As a result, a rotating movement of the rotor 48 in the heat generating chamber 39 is obtained, which causes a centrifugal force to be generated in the silicone oil, thereby spreading the latter along the entire area of the heat generating gap between the inner surface of the heat generating chamber 39 and the outer surface of the rotor 48. Due to the relative movement between the inner surface of the heat generating chamber 39 and

the outer surface of the rotor 48 constructing the gap, a shearing force is generated in the silicone oil at the gap, thereby generating heat in the silicone oil. The thus generated heat is subjected to a heat exchange with the recirculated heating medium in the front and rear water jackets FW and RW, so that the heated recirculated water is issued to the heating circuit (not shown) for heating the passenger compartment of the vehicle.

[0050] A continuation of the rotating movement of the rotor 48 causes the silicone oil to be mostly concentrated at the central area of the heat generating chamber due to the Weissenberg effect. In other words, a large amount of the silicone oil is concentrated to the central area of the heat generating gap.

[0051] A temperature of the silicone oil in the control chamber CR lower than a predetermined value due to an excessively weak heating effect causes the bimetal member 42 to contract, where the valve shaft 43 connected to the bimetal member 42 is rotated in a positive direction to a first position, where the first recovery hole 33b and the second recovery hole 45a are disconnected, while the first feed hole 33c and the second feed hole 45b are connected. As a result, the silicone oil stored in the control chamber CR is via the second feed hole 45b and the first feed hole 33c introduced into the heat generating chamber 39. As a result, an increase in the amount of the heat generated at the gap between the inner surface of the heat generating chamber 39 and the outer surface of the rotor 48 is obtained, thereby strengthening the effect of the heating the passenger compartment.

[0052] A temperature of the silicone oil in the control chamber CR higher than a predetermined value due to an excessively strong heating effect causes the bimetal member 42 to extend, where the valve shaft 43 connected to the bimetal member 42 is rotated in a negative direction to a second position, where the first recovery hole 33b and the second recovery hole 45a are connected, while the first feed hole 33c and the second feed hole 45b are disconnected. As a result, the silicone oil in the heat generating chamber 39 is, via the first recovery hole 33b and the second recovery hole 45, recovered to the control chamber CR. As a result, a quick decrease in the amount of the heat generated at the gap between the inner surface of the heat generating chamber 39 and the outer surface of the rotor 48 is obtained, thereby rapidly weakening the effect of the heating the passenger compartment.

[0053] In short, in the second embodiment, a quick replacement of the silicone oil is realized between the heat generating chamber 39 and the control chamber CR. In other words, a large amount of the silicone oil together with air inevitably mixed in the oil can be stored in the viscous heater. As a result, to the total amount of the viscous fluid in the viscous heater, only a small part thereof is subjected to the shearing at the heat generating gap. In other word, a particular part of the silicone oil is prevented from being always subjected to the shearing, thereby degradation of the silicone oil becomes less likely.

[0054] Other operations and advantageous effect of the second embodiment are the same as that of the first embodiment.

Third Embodiment

[0055] In Fig. 4 partially showing the third embodiment of the present invention, where the viscous heater is of a fixed capacity type. Furthermore, the viscous heater is formed with a front housing 51 having, at its rear side, a mere flat recess 51a, which is faced with a flat intermediate plate 52, so that a heat generating chamber 7 is formed between the housing 51 and the plate 52. Contrary to this, a rotor 53 arranged in the heat generating chamber has a cross-sectional shape which is tapered radially inwardly. As a result, between the inner surface of the heat generating chamber and the outer surface of the rotor 52, a heat generating gap of a varied width is formed such that further radially outward the width of the gap becomes smaller.

[0056] In the third embodiment in Fig. 4, a mere tapering of the surface of the rotor 53 is necessary, while both of the front housing 51 as well as the rear plate 52 have a relatively simple shape, which can be easily machined. As a result, a reduction in the production cost is realized.

Fourth Embodiment

[0057] The viscous heater shown in Fig. 5 is also of a fixed capacity type. In the viscous heater of this embodiment, a front housing 54 has, at is rear end, a recess having a bottom surface 54a, which is tapered outwardly, while a rear plate 55 has a front end surface 55a, which is tapered also outwardly. A rotor 12 having opposite end surfaces which extend transversely to the axis of the drive shaft is employed as in the first embodiment. As a result, a heat generating gap is formed between the inner surface of the heat generating chamber and the outer surface of the rotor 12, wherein the axial width of the gap is such that further outward the width of the gap becomes smaller.

[0058] In this embodiment, the front housing part 54 as well as the rear plate 55 are easily machined, which allows the device to be produced at a low cost.

Claims

1. A viscous heater comprising:

a housing forming therein a heat generating chamber (7; 39) for storing therein a viscous fluid and a heat emission chamber (WJ; FW, RW) which is located adjacent the heat generating chamber (7; 39) and in which a heating medium

is recirculated;

a rotor (12, 53) located in the heat generating chamber (7; 39) so that a gap is formed between an outer surface of said rotor (12, 53) and an inner surface of the heat generating chamber (7, 39); and

a drive shaft (11) on which the rotor (12; 53) is mounted, whereby said rotor (12; 53) is integrally rotated with said shaft (11) in the heat generating chamber (7; 39) and a shearing force is generated in the viscous fluid between the rotor (12; 53) and the inner surface of the heat generating chamber (7; 39),

characterized in that the gap has a varied width in an axial direction such that the width of the gap at an outer portion of said rotor (12; 53) is smaller than the width of the gap at a central portion of said rotor (12), and that said housing comprises a plate member (2; 33; 52; 55) having a pair of spaced end surfaces, one of which forms a part of the inner surface of the heat generating chamber (7; 39), the other surface forming a part of an inner surface of the heat emission chamber (WJ; FW, RW) and a housing member (1; 32; 51; 54) which forms the remaining part of the inner surface of the heat generating chamber (7; 39), said plate member (2; 33; 52; 55) having a machined portion (2a; 33a; 55a) at the inner surface of the heat generating chamber (7; 39) for creating the gap.

2. A viscous heater according to claim 1, wherein the housing is further provided with a sealingly closed viscous fluid storage chamber (CR) which is in communication with the central part of the heat generating chamber (7; 39) via a feed passageway (33c) and a recovery passageway (33b).

3. A viscous heater according to claim 1, wherein said rotor (53) has a machined portion (53a) at the outer surface for creating said gap of the varied width.

4. A viscous heater according to claim 3, wherein the machined portion (53a) is of a tapered form forming the gap having the varied width.

5. A viscous heater according to claim 1, wherein the machined portion (55a) is of a tapered form forming the gap having the varied width.

6. A viscous heater according to claim 1, wherein the machined portion (2a; 33a) is of a stepped form forming the gap having the varied width.

7. A viscous heater according to claim 1, wherein the varied width of the gap is continuously reduced from its central portion to its outer peripheral portion.

Patentansprüche

1. Visko-Heizvorrichtung, welche umfasst:

ein Gehäuse mit einem darin gebildeten Wärmeerzeugungsraum (7; 39), um darin ein viskoses Fluid zu speichern, und einem Wärmeabgaberaum (WJ; FW, RW), der benachbart zu dem Wärmeerzeugungsraum (7; 39) angeordnet ist und in dem ein Heizmedium umläuft;

einen Rotor (12, 53), welcher in dem Wärmeerzeugungsraum (7; 39) so angeordnet ist, dass ein Spalt zwischen einer Außenoberfläche des Rotors (12, 53) und einer Innenoberfläche des Wärmeerzeugungsraums (7, 39) entsteht; und

eine Antriebswelle (11), auf welcher der Rotor (12; 53) montiert ist, wodurch der Rotor (12; 53) als eine Einheit mit der Welle (11) in dem Wärmeerzeugungsraum (7; 39) rotiert und eine scherende Kraft in dem viskosen Fluid zwischen dem Rotor (12; 53) und der Innenoberfläche des Wärmeerzeugungsraums (7; 39) erzeugt wird,

dadurch gekennzeichnet, dass der Spalt eine unterschiedliche Breite in Axialrichtung aufweist, dergestalt, dass die Breite des Spaltes in einem äußeren Bereich des Rotors (12; 53) kleiner ist als die Breite des Spaltes in einem zentralen Bereich des Rotors (12), und dass das Gehäuse ein Plattenelement (2; 33; 52; 55) mit einem Paar voneinander beabstandeter Endoberflächen umfasst, von denen eine einen Teil der Innenoberfläche des Wärmeerzeugungsraumes (7; 39) bildet, während die andere Oberfläche einen Teil einer Innenoberfläche des Wärmeabgaberaumes (WJ; FW, RW) bildet, und ein Gehäuseelement (1; 32; 51; 54), welches den verbleibenden Teil der Innenoberfläche des Wärmeerzeugungsraumes (7; 39) bildet, wobei das Plattenelement (2; 33; 52; 55) einen maschinell gearbeiteten Bereich (2a; 33a; 55a) an der Innenoberfläche des Wärmeerzeugungsraumes (7; 39) zum Erzeugen des Spaltes aufweist.

2. Visko-Heizvorrichtung nach Anspruch 1, wobei das Gehäuse ferner einen dicht abgeschlossenen Speicherraum (CR) für viskoses Fluid aufweist, welcher mit dem zentralen Teil des Wärmeerzeugungsraumes (7; 39) über einen Zuführungsdurchlass (33c) und einen Rückführungsdurchlass (33b) verbunden ist.

3. Visko-Heizvorrichtung nach Anspruch 1, wobei der Rotor (53) einen maschinell gearbeiteten Bereich (53a) an der Außenoberfläche zum Erzeugen des Spaltes mit unterschiedlicher Breite aufweist.

4. Visko-Heizvorrichtung nach Anspruch 3, wobei der maschinell gearbeitete Bereich (53a) eine sich verjüngende Form aufweist, welche den Spalt mit unterschiedlicher Breite bildet.

5. Visko-Heizvorrichtung nach Anspruch 1, wobei der maschinell gearbeitete Bereich (55a) eine sich verjüngende Form aufweist, welche den Spalt mit unterschiedlicher Breite bildet.

6. Visko-Heizvorrichtung nach Anspruch 1, wobei der maschinell gearbeitete Bereich (2a; 33a) eine abgestufte Form aufweist, welche den Spalt mit unterschiedlicher Breite bildet.

7. Visko-Heizvorrichtung nach Anspruch 1, wobei die unterschiedliche Breite des Spaltes vom zentralen Bereich zum äußeren Randbereich des Spaltes kontinuierlich kleiner wird.

Revendications

1. Appareil de chauffage viscocalorifique comprenant :

un carter à l'intérieur duquel sont formées une chambre de production de chaleur (7 ; 39) destinée à stocker un fluide visqueux, et une chambre d'émission de chaleur (WJ ; FW, RW) qui est placée en contiguïté de la chambre de production de chaleur (7 ; 39) et dans laquelle un fluide de chauffage est mis en circulation ;
un rotor (12, 53) placé dans la chambre de production de chaleur (7 ; 39) de telle sorte qu'un interstice soit formé entre une surface extérieure dudit rotor (12, 53) et une surface intérieure de la chambre de production de chaleur (7 ; 39) ; et
un arbre d'entraînement (11) sur lequel est monté le rotor (12 ; 53), de sorte que ledit rotor (12 ; 53) soit entraîné en rotation d'une manière solidaire avec ledit arbre (11), dans la chambre de production de chaleur (7 ; 39), et qu'une force de cisaillement soit générée dans le fluide visqueux entre le rotor (12, 53) et la surface intérieure de la chambre de production de chaleur (7 ; 39) ;

caractérisé en ce que l'interstice a une largeur non uniforme dans une direction axiale, de telle sorte que la largeur de l'interstice au niveau d'une partie extérieure dudit rotor (12 ; 53) soit plus petite que la largeur de l'interstice au niveau d'une partie centrale dudit rotor (12), et **en ce que** le carter comprend un élément formant platine (2 ; 33 ; 52 ; 55) ayant deux surfaces d'extrémité espacées, dont l'une forme une partie de la surface intérieure de la chambre de production de chaleur (7 ; 39), l'autre surface formant une partie d'une surface intérieure de la chambre d'émission de chaleur (WJ ; FW, RW), et un élément formant carter (1 ; 32 ; 51 ; 54) qui forme la partie restante de la surface intérieure de la chambre de production de chaleur (7 ; 39), ledit élément formant platine (2 ; 33 ; 52 ; 55) ayant une partie usinée (2a ; 33a ; 55a) au niveau de la surface intérieure de la chambre de production de chaleur (7 ; 39), afin de créer l'interstice.

2. Appareil de chauffage viscocalorifique selon la revendication 1, dans lequel le carter est, en outre, pourvu d'une chambre de stockage de fluide visqueux (CR), fermée hermétiquement, qui est en communication avec la partie centrale de la chambre de production de chaleur (7 ; 39) par l'intermédiaire d'un passage d'amenée (33c) et d'un passage de récupération (33b).

3. Appareil de chauffage viscocalorifique selon la revendication 1, dans lequel ledit rotor (53) a une partie usinée (53a) au niveau de la surface extérieure, pour créer ledit interstice de largeur non uniforme.

4. Appareil de chauffage viscocalorifique selon la revendication 3, dans lequel la partie usinée (53a) a une forme conique formant l'interstice de largeur non uniforme.

5. Appareil de chauffage viscocalorifique selon la revendication 1, dans lequel la partie usinée (55a) a une forme conique formant l'interstice de largeur non uniforme.

6. Appareil de chauffage viscocalorifique selon la revendication 1, dans lequel la partie usinée (2a ; 33a) a une forme étagée formant l'interstice de largeur non uniforme.

7. Appareil de chauffage viscocalorifique selon la revendication 1, dans lequel la largeur non uniforme de l'interstice est réduite d'une manière continue depuis sa partie centrale jusqu'à sa partie périphérique extérieure.

Fig.1

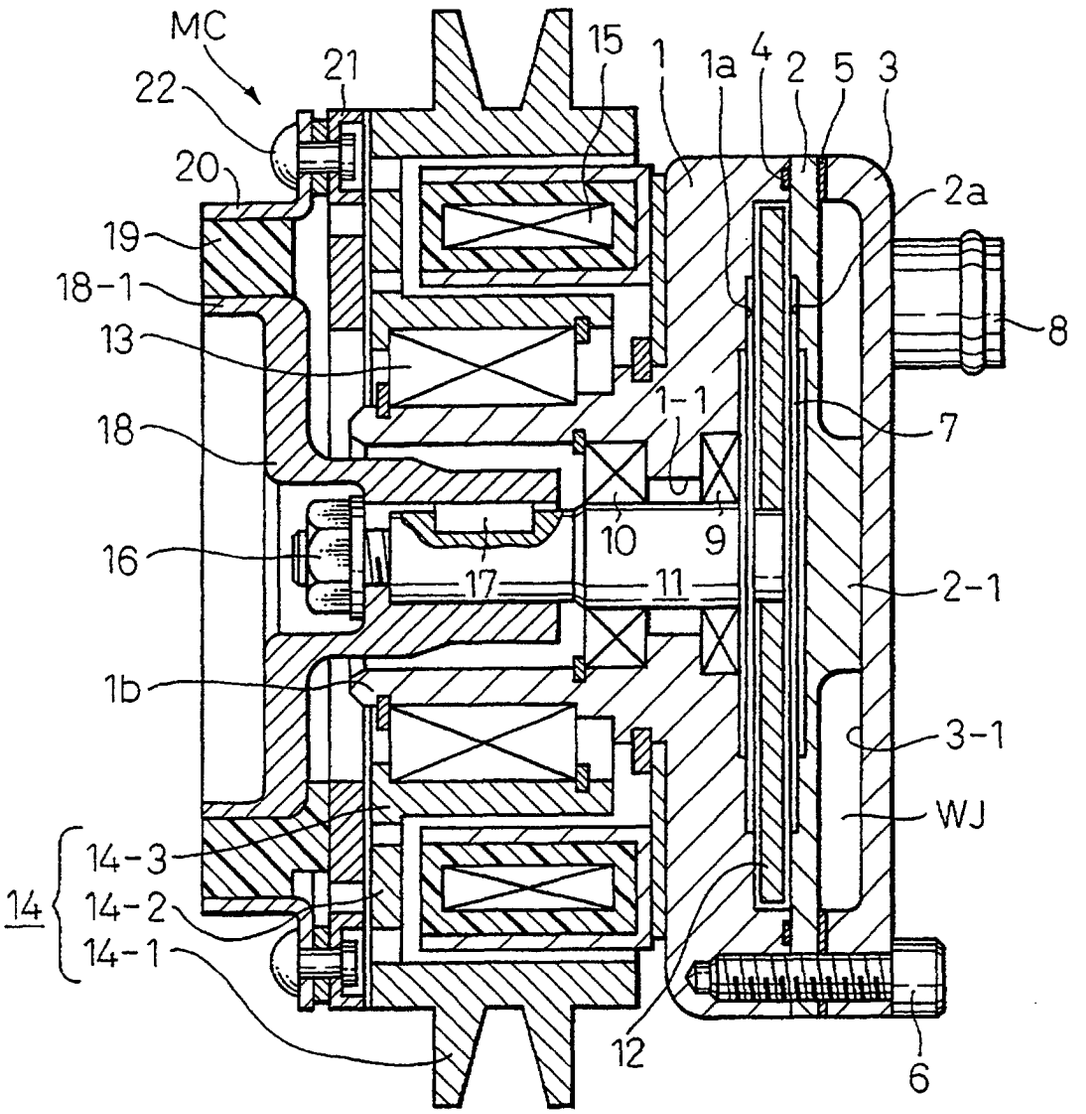
MC
22
21
15
1
1a
4
2
5
3
20
2a
19
18-1
13
8
1-1
7
18
10
9
16
17
11
2-1
1b
3-1
WJ
14
14-3
14-2
14-1
12
6

Fig.2

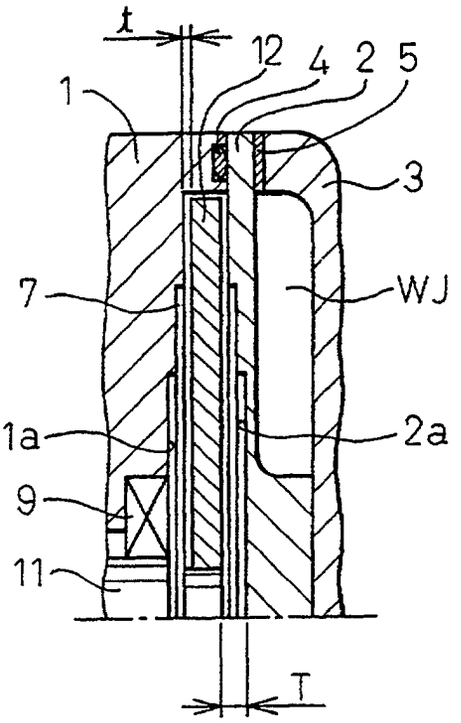

Fig.3

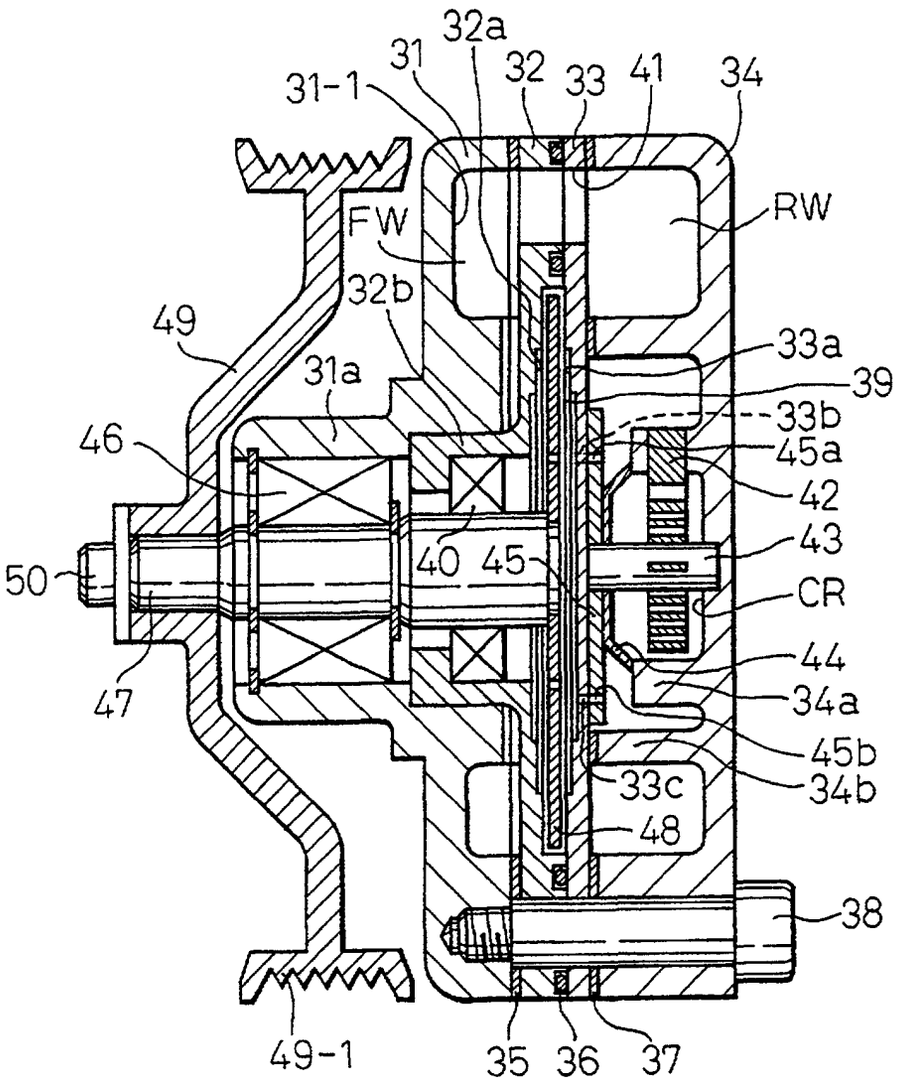
32a
31
32
33
41
34
31-1
RW
FW
32b
49
33a
39
31a
33b
46
45a
42
40
45
43
50
CR
44
47
34a
45b
33c
34b
48
38
49-1
35
36
37

Fig.4

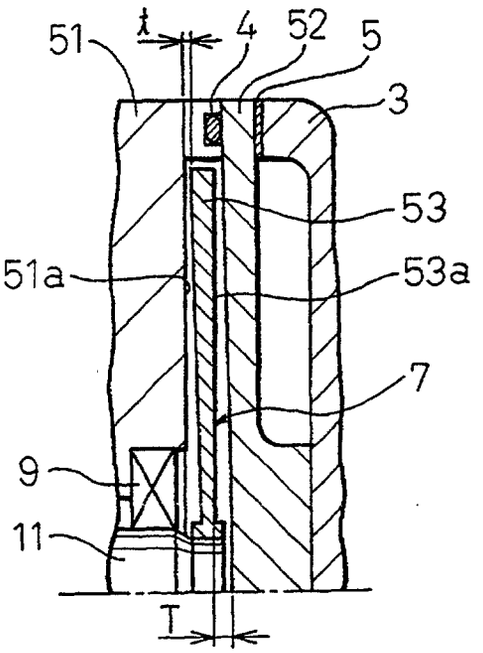

Fig.5

