(No Model.) 6 Sheets—Sheet 1.

# R. EGLI.

## WIRE NAIL MACHINE.

No. 309,446. Patented Dec. 16, 1884.

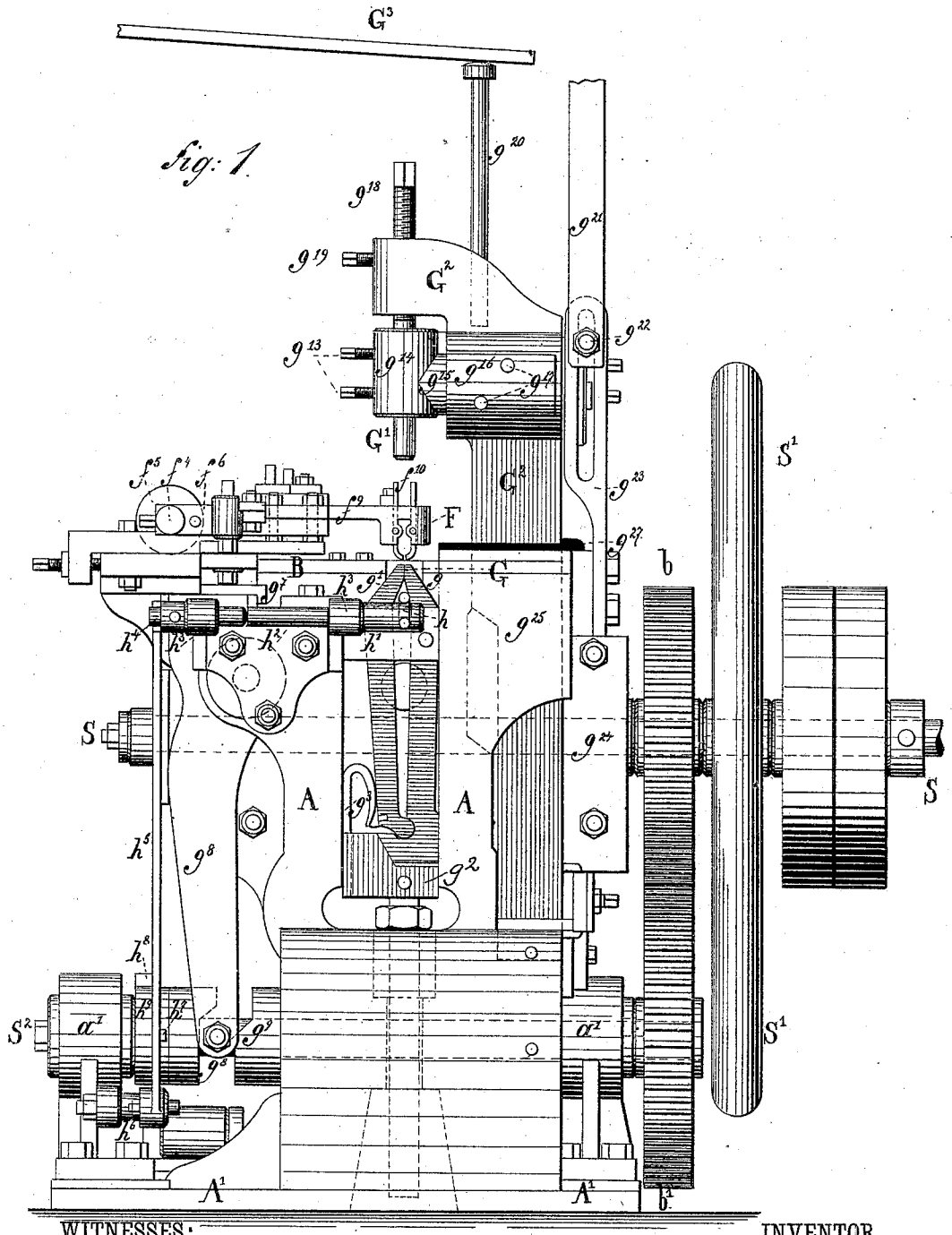


WITNESSES:
A. Schehl.
Sidney Mann

INVENTOR
Rudolf Egli
BY
Goepel & Raegener
ATTORNEYS.

(No Model.) 6 Sheets—Sheet 2.

# R. EGLI.

## WIRE NAIL MACHINE.

No. 309,446. Patented Dec. 16, 1884.

Fig. 2.

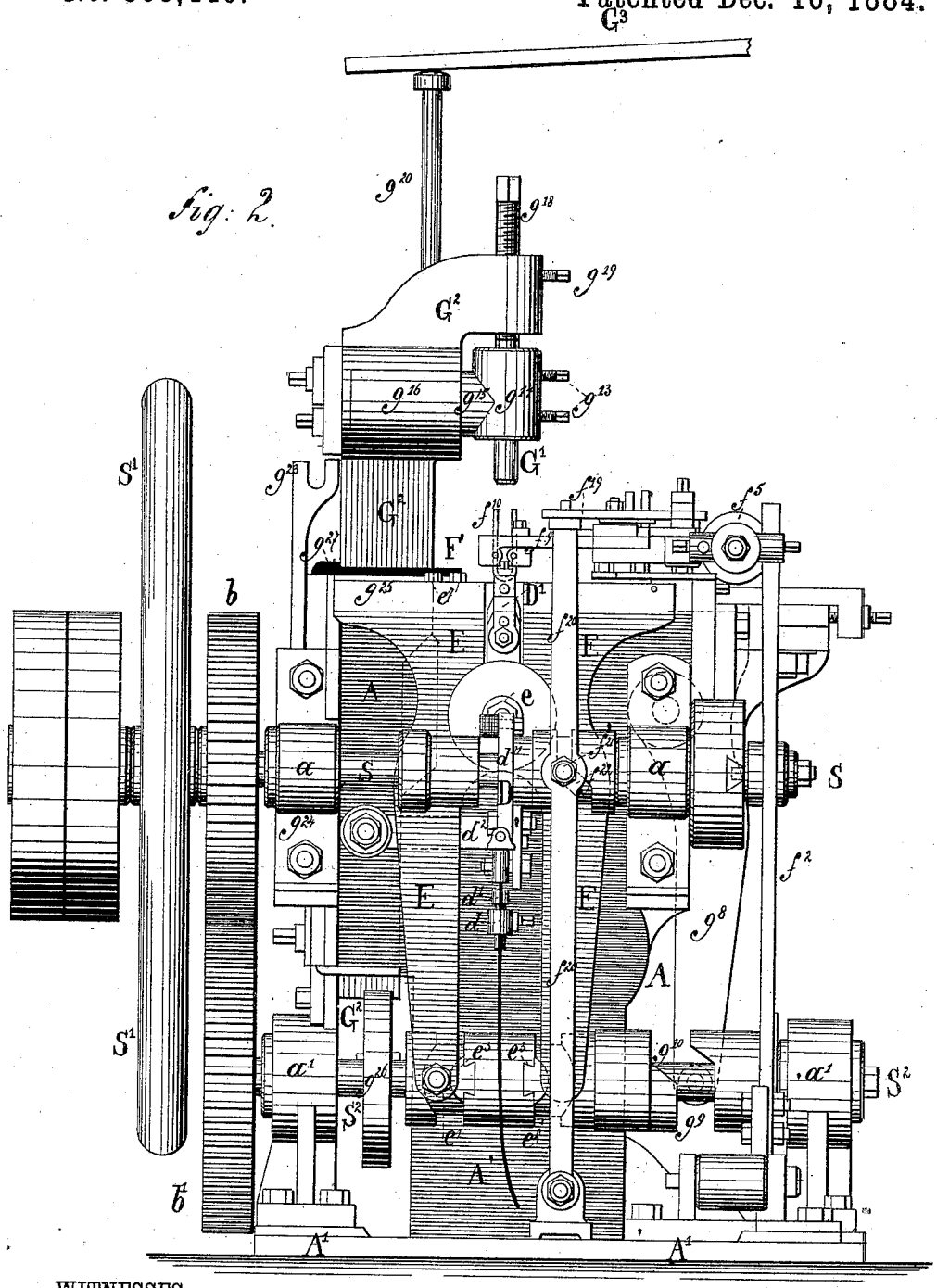


WITNESSES:
A. Schehl
Sidney Mann

INVENTOR
Rudolf Egli
BY
Gorpel & Pagenner
ATTORNEYS.

(No Model.) 6 Sheets—Sheet 3.

R. EGLI.

WIRE NAIL MACHINE.

No. 309,446. Patented Dec. 16, 1884.

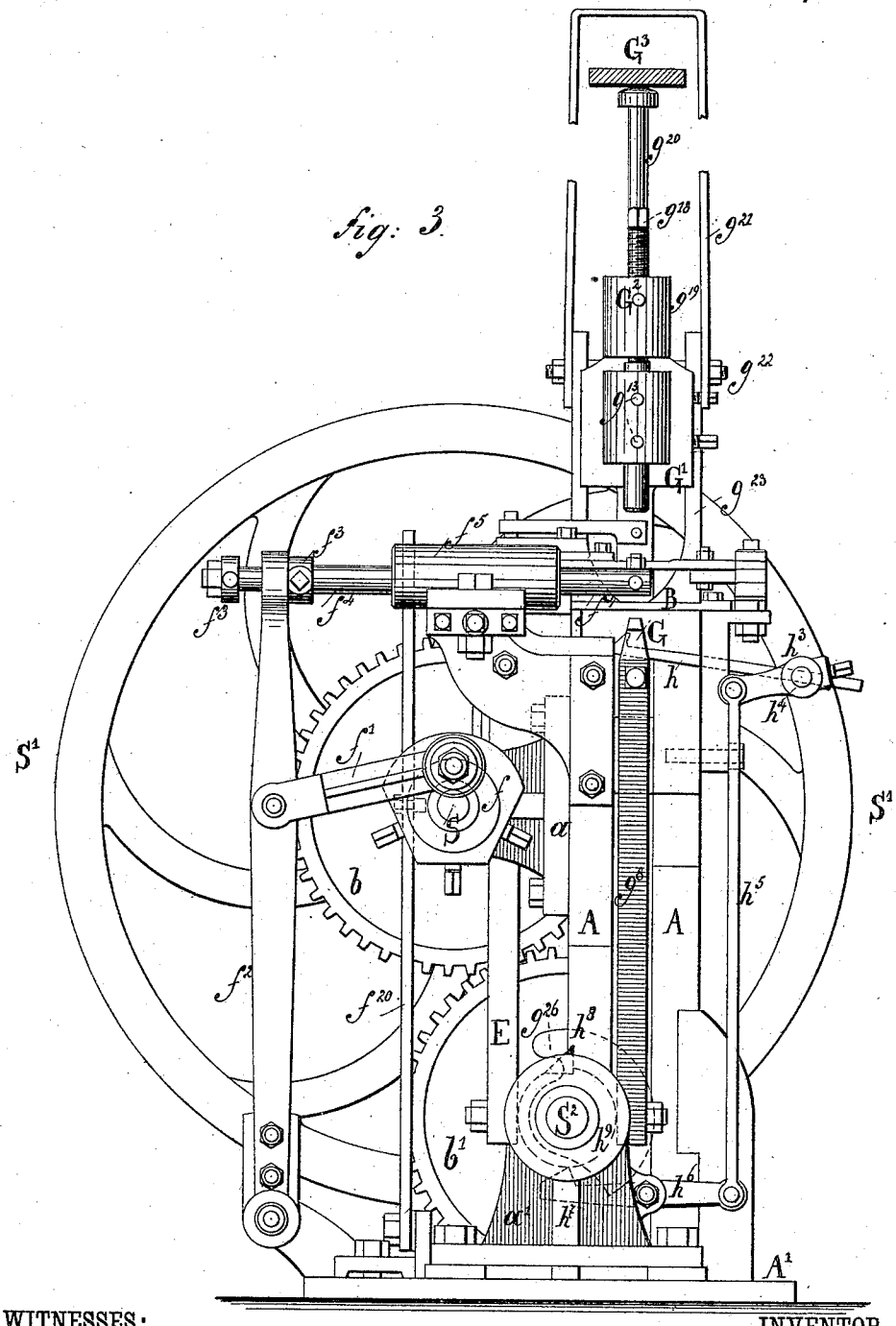


WITNESSES:

A. Schohl

Sidney Mann

INVENTOR

Rudolf Egli

BY

Goepel & Raegener

ATTORNEYS.

(No Model.)

6 Sheets—Sheet 4.

# R. EGLI.

## WIRE NAIL MACHINE.

No. 309,446.

Patented Dec. 16, 1884.

Fig: 4.

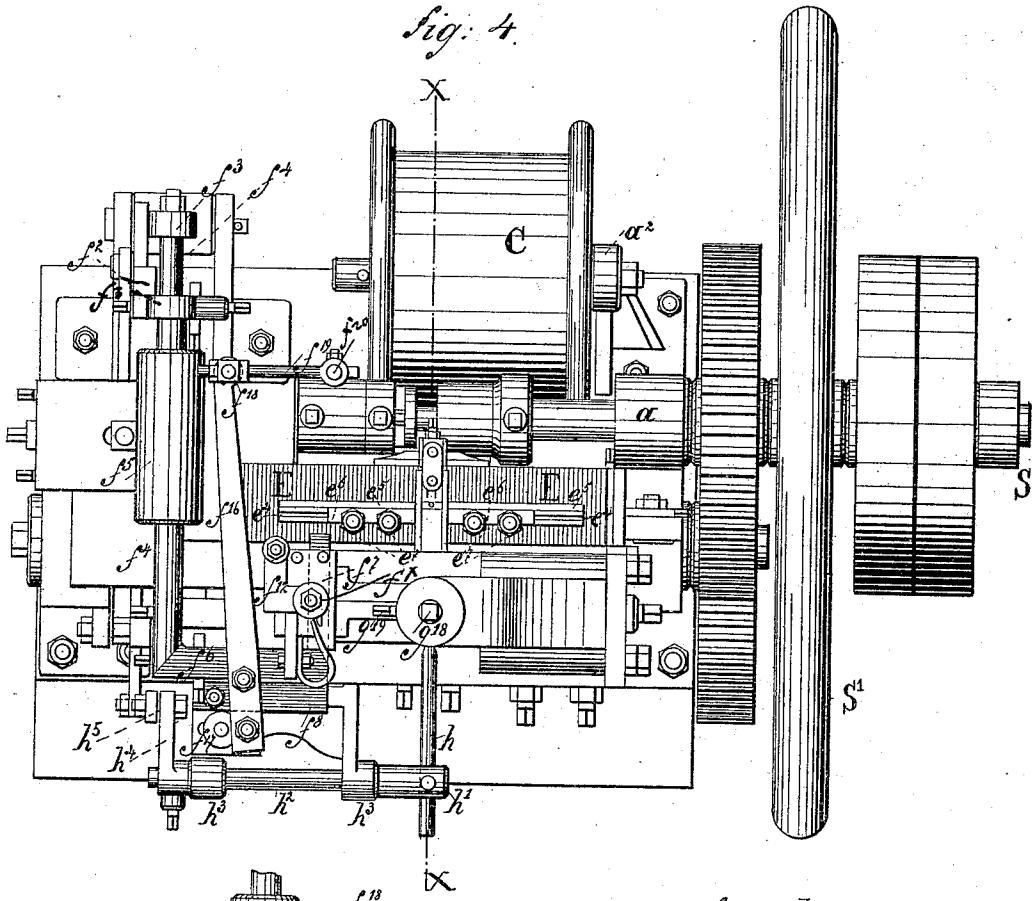

Fig: 4a

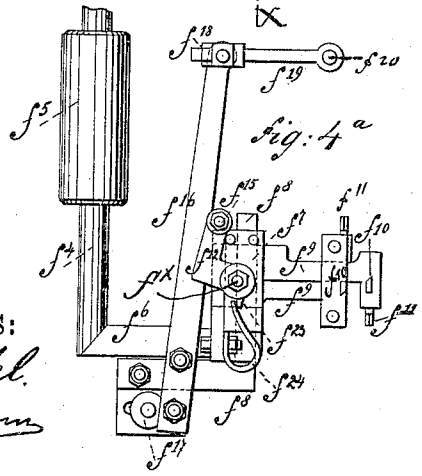

Fig: 4b

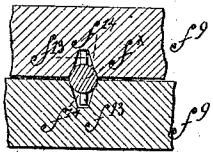

WITNESSES:

A. Schehl.

K. Kraußmann

INVENTOR

Rudolf Egli

BY Gorpel & Raegener

ATTORNEYS.

(No Model.) 6 Sheets—Sheet 5.

# R. EGLI.

## WIRE NAIL MACHINE.

No. 309,446. Patented Dec. 16, 1884.

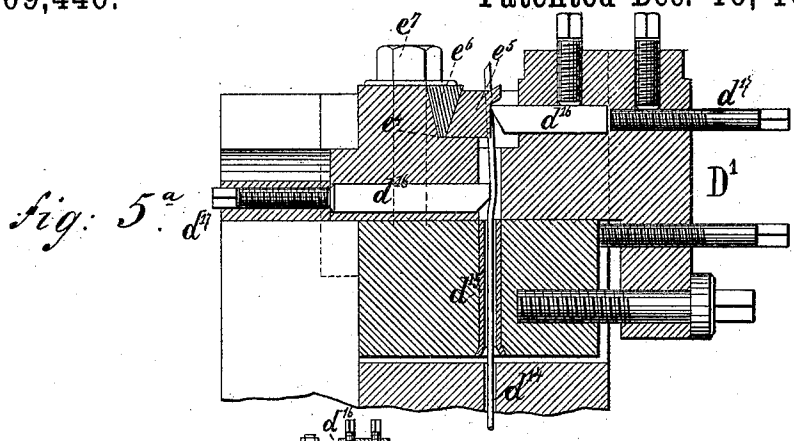


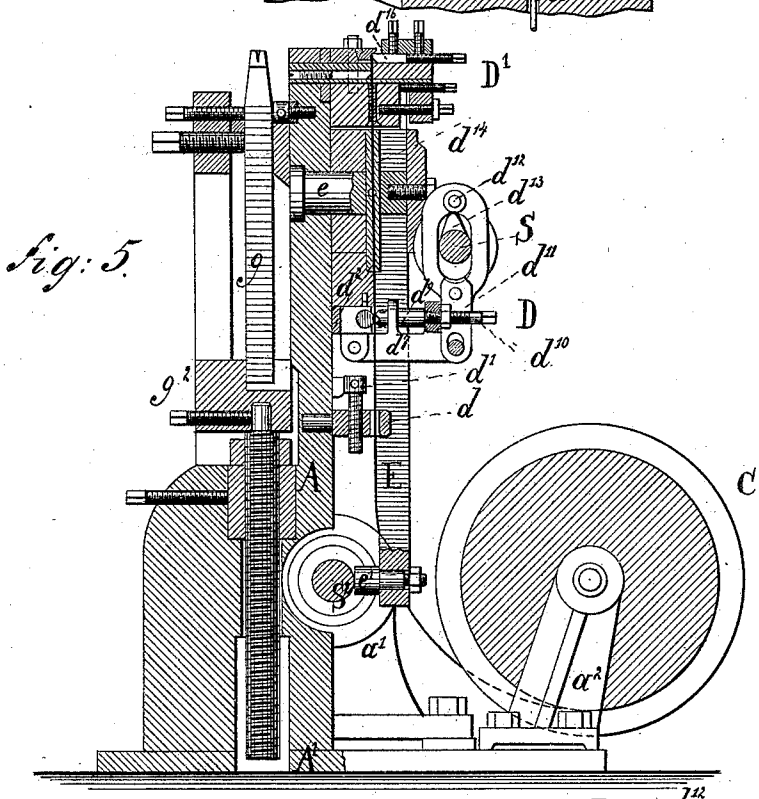


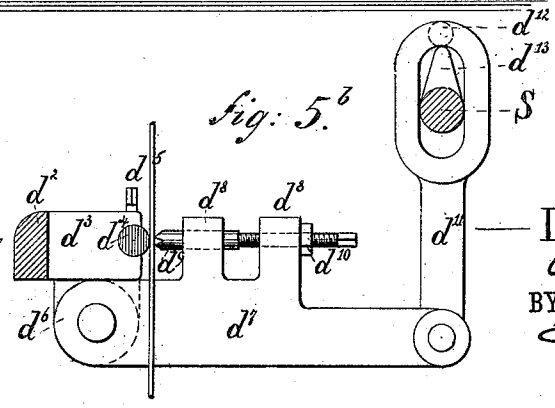


WITNESSES:
A. Schehl.
Konnefmann

INVENTOR
Rudolf Egli
BY Popel & Raegener
ATTORNEYS.

(No Model.)

6 Sheets—Sheet 6.

# R. EGLI.

## WIRE NAIL MACHINE.

No. 309,446.

Patented Dec. 16, 1884.

fig: 6.

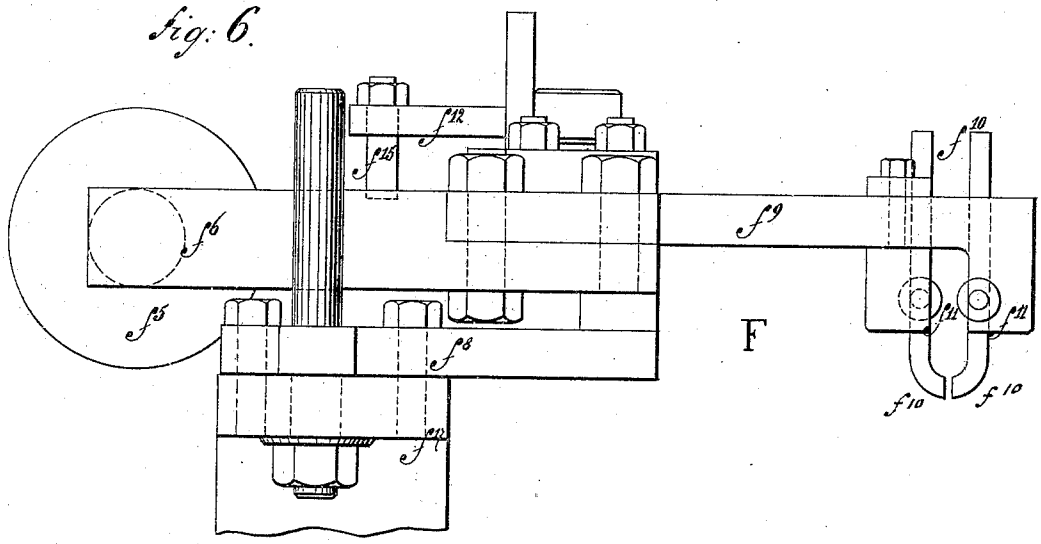


fig: 7

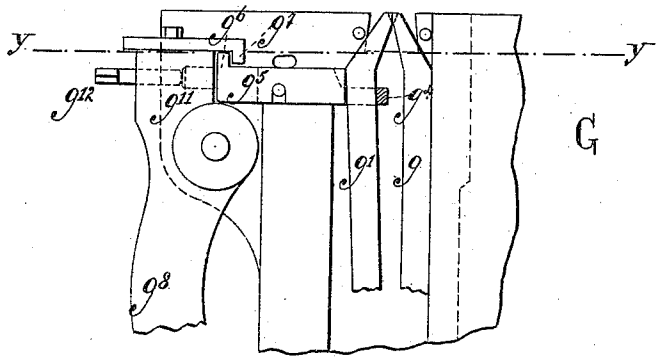


fig: 8.

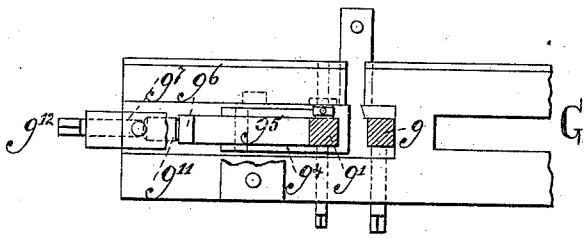


WITNESSES:

A. Schehl.

Sidney Mann

INVENTOR

Rudolf Egli

BY Goepel & Raegener

ATTORNEYS.

# UNITED STATES PATENT OFFICE.

RUDOLF EGLI, OF RAPPERSCHWYL, SWITZERLAND, ASSIGNOR, BY MESNE ASSIGNMENTS, TO LEWIS M. LOSS, OF ROCHESTER, NEW YORK.

## WIRE-NAIL MACHINE.

SPECIFICATION forming part of Letters Patent No. 309,446, dated December 16, 1884.

Application filed February 21, 1884. (No model.)

*To all whom it may concern:*

Be it known that I, RUDOLF EGLI, of Rapperschwyl, in the Republic of Switzerland, have invented certain new and useful Improvements in Machines for Making Shoe Nails and Tacks, of which the following is a specification.

This invention has reference to an improved machine for making shoe nails and tacks of any desired size and shape from a continuous piece of wire that is fed to the machine and cut into nail-blanks of peculiar shape, which blanks are acted upon successively by the different mechanisms constituting the machine, so that with each full rotation of the driving-shaft an entirely-finished nail or tack is produced.

My improved machine forms more especially a modification of the machine for making shoe and upholsterers' nails for which Letters Patent of the United States have been granted to me heretofore under date of July 3, 1883, No. 280,458, the modifications being designed with a view to make the machine more compact and of simpler and less expensive construction, and specially adapted to make nails and tacks of a smaller size.

The instrumentalities employed in my improved machine which forms the subject-matter of this application are in general the same as those which have been employed by me in the patented machine referred to, to wit: first, a mechanism for taking up and intermittently feeding the wire; second, a wire-holding mechanism; third, a wire-cutting mechanism, whereby nail-blanks of proper size are cut off from the wire; fourth, a nail-blank-carrying mechanism which conducts the blank from the cutting-knives to the jaws of the head-forming dies; fifth, the head-shaping dies, which consist of lower holding-dies and a drop-die; and, sixth, a mechanism for throwing out the finished nail.

Instead of actuating these different mechanisms from one power-shaft at the upper part of the machine, as in my former patent, I propose to locate the driving-shaft at the lower part of the machine, and to employ an auxiliary shaft at the lower part of the machine, whereby the actuating mechanisms are concentrated at the lower part of the machine, so that the machine is rendered more compact, more stable, and less complicated.

The invention consists more especially in the specific construction of the different actuating mechanisms and their combination with the power-transmitting shafts.

In the accompanying drawings, Figure 1 represents a front elevation of my improved machine for making shoe nails and tacks with the wire-reel removed. Fig. 2 is a rear elevation, Fig. 3 a side elevation, and Fig. 4 a plan, of the machine. Figs. $4^a$ and $4^b$ are details of the nail-blank-carrying mechanism. Fig. 5 is a vertical transverse section of the machine on line *x x*, Fig. 4. Fig. $5^a$ is a detail of the wire-holding mechanism, located immediately below the cutting-knives. Fig. $5^b$ is a detail of the wire-feeding mechanism. Fig. 6 is an end elevation of the nail-blank-carrying mechanism, drawn on a larger scale; and Figs. 7 and 8 are respectively a detail view of the lower nail-holding dies and a horizontal section of the same on line *y y*, Fig. 7.

Similar letters of reference indicate corresponding parts.

A in the drawings represents the supporting-frame of the machine, which frame is made of cast-iron or suitable material; A′, the bed-plate of the same, and B a horizontal table at the upper part of frame A.

At the rear part of the frame A, at some distance below the table, are arranged bracket-bearings *a a* for the main driving-shaft S, that receives rotary motion by a belt-and-pulley transmission from a suitable power-shaft. A fly-wheel, S′, is arranged on the main shaft S, close to the fast and loose pulleys of the same, as shown in Figs. 1 and 2.

At the lower part of the frame A, and vertically below the main shaft S, is arranged an auxiliary shaft, $S^2$, which turns in bearings *a′*, and which receives rotary motion by strong gear-wheels *b b′* from the main shaft S.

At the lower rear part of the frame A is arranged a wire-reel, C, which is supported in bracket-bearings $a^2$, as shown in Fig. 5.

From the wire-reel C the wire from which the nails or tacks are made is fed to the machine, it being first taken up by the intermittently-

actuated wire-feeding mechanism D, which is arranged at the rear part of the machine, and then taken up by the wire-holding mechanism D′, which is arranged above the feed mechanism, and intermediately between the same and the cutting-knives.

*The wire feeding and holding mechanism.*—The wire-feeding mechanism D is shown in Figs. 2 and 5 and in detail in Fig. 5ᵇ. It consists of a fixed perforated eye, $d$, that is rigidly secured to the frame A, and provided with a vertically-adjustable stop-screw, $d'$, forward of the guide-perforation for the wire. A lateral arm, $d^2$, is pivoted to the rear part of frame A, as shown in Fig. 2, which is provided with an angular rearward-projecting bracket, $d^3$, having a socket for a transverse steel cheek, $d^4$, of cylindrical shape, which cheek is rigidly secured in its socket by a set-screw, $d^5$. The steel cheek $d^4$ projects slightly beyond its socket, as shown clearly in Fig. 5ᵇ. When the projecting portion of the steel cheek $d^4$ is worn by use, it is turned in its socket, and thereby another part of its circumference exposed to wear. The bracket $d^3$ is provided with two downwardly-projecting ears, $d^6$, to which is pivoted an oscillating lever, $d^7$, having upwardly-extending sleeves $d^8$, that guide, respectively, the serrated adjustable steel jaw $d^9$ and its set-screw $d^{10}$. The adjustable jaw $d^9$ and its set-screw $d^{10}$ are arranged in line with each other and at right angles to the steel cheek $d^4$, the wire passing up between the cheek $d^4$ and serrated jaw $d^9$, so as to be rigidly taken hold of by the same at the proper moment for feeding the wire.

To the outer end of the lever $d^7$ is pivoted the lower end of a lever-arm, $d^{11}$, the slotted upper end of which embraces the main shaft S, and is provided with a roller, $d^{12}$, that is engaged by a cam or nose, $d^{13}$, on the shaft S. At each revolution of the shaft S the nose $d^{13}$ engages the roller $d^{12}$, and lifts thereby the lever-arm $d^{11}$ and lever $d^7$, so as to cause the serrated end of the jaw $d^9$ to bite the wire and press it rigidly against the convex projecting cheek $d^4$, as shown clearly in Fig. 5ᵇ. As the lateral arm $d^2$ is lifted simultaneously by the action of the lever mechanism $d^{11}$ $d^7$, the wire is thereby lifted to a length corresponding to the size of the blank to be cut off. The moment the nose $d^{13}$ passes the roller $d^{12}$ the lever-arm $d^{11}$ and the lever $d^7$ are dropped, whereby the jaw $d^9$ is released from the wire, which is retained by the holding mechanism D′ next above. The lever $d^7$ is stopped in its downward motion by the head of the stop-screw $d'$, which, in connection with the nose $d^{13}$, controls the length of feed. The stop-screw $d'$ may be adjusted higher or lower in its socket, according as a smaller or larger nail-blank is to be cut off by the cutting-knives.

From the wire-feeding mechanism D just described the wire is passed through a fixed vertical guide-tube, $d^{14}$, which serves to straighten the wire, and is then delivered to a guide-tube, $d^{15}$, of the holding mechanism D′. The vertical guide-tube $d^{14}$ has a conically-flaring lower end, which serves as a scraper, and removes from the wire any small metallic particles adhering thereto, which are dropped to the bed-plate. Above the guide-tube $d^{15}$ are arranged at opposite sides the wire-holding jaws $d^{16}$, which are arranged vertically above each other, as shown in Fig. 5ᵃ. The holding-jaws $d^{16}$ have slightly-concaved faces, and are so adjusted by their set-screws $d^{17}$ that they impart a considerable friction on the wire, and prevent the same from receding when the feeding mechanism D is dropped.

*The nail-blank-cutting mechanism.*—The nail-blank-cutting mechanism consists of two knife-levers, E E, which are applied to a transverse fulcrum, $e$, and provided at their lower ends with anti-friction rollers $e'$, that "take" into symmetrically-arranged cam-grooves $e^3$ on the auxiliary shaft S², so that the levers E E are simultaneously oscillated on the fulcrum. The enlarged upper ends of the knife-levers E E have longitudinal recesses $e^4$, within which the cutting-knives $e^5$ are rigidly secured by tapering keys $e^6$ and accurately adjusted by set-screws $e^7$, as shown clearly in Figs. 4 and 5ᵃ. The cutting-edges of the knives $e^5$ are curved, so as to produce a diagonally-curved cut across the projecting wire end, which forms the characteristic feature of my nail-making machines, and which is fully described in the prior patent hereinbefore referred to. As both knives are oscillated, they exert a joint cutting action, so as to form the pointed shank of the nail-blank, the thicker projecting part of which is formed afterward into the head of the nail or tack. According to the size of the upper and thicker part of the nail-blank, the head of the nail or tack can be made larger or smaller, as required by the size and shape of the nails or tacks to be produced. The shank of the nail-blank is not pressed into shape at this point, as in my former machine, but remains in the condition as it is delivered from the knives. As soon as the wire is fed upward and before it is cut off by the knives, the projecting end of the wire is taken hold of by the jaws of the nail-blank carrier F, so as to be conducted from the cutting-knives forward to the lower holding-jaws of the nail-shaping dies.

*The nail-blank-carrying mechanism.*—The nail-blank-carrying mechanism F is shown in Figs. 4ᵃ, 4ᵇ, and 6. It consists of two separate actuating mechanisms—one by which reciprocating motion is imparted to the carrier F, and one by which the fingers of the same are opened or closed at the proper moment. The mechanism for reciprocating the carrier is operated from the main shaft S by an eccentric, $f$, which is connected by a pivot-link, $f'$, with an oscillating lever, $f^2$, that is pivoted at its lower end to supports on the bed-plate A′, as shown clearly in Fig. 3. The upper end of the lever $f^2$ is oscillated between adjustable

collars $f^3$ of a horizontal rod, $f^4$. The rod $f^4$ is guided by a laterally-adjustable sleeve, $f^5$, arranged on the table B, and provided at its opposite end with a lateral arm, $f^6$, that extends at right angles from the rod $f^4$ toward the nail-forming dies. To the lateral arm $f^6$ is applied a guide-piece, $f^7$, which extends backward parallel to the rod $f^4$, and which rests on a fixed guide-arm, $f^8$, which also extends backward parallel to the rod $f^4$. The guide-arm $f^8$ serves to support the guide-piece $f^7$ at the proper height above the table B. In the guide-piece $f^7$ are transversely guided the parallel shanks $f^9$ of the jaws $f^{10}$, the latter being vertically adjustable in the sockets of the shanks $f^9$ by set-screws $f^{11}$. A bell-crank lever, $f^{12}$, is pivoted at one end to bearings of the guide-piece $f^7$, the pivot $f^{\times}$ engaging by cams $f^{13}$ recesses $f^{14}$ of the parallel jaw-holding shanks, as shown in Fig. 4[b]. The outer end of the bell-crank lever $f^{12}$ is provided with a stud, $f^{15}$, that is acted upon by a horizontal oscillating lever, $f^{16}$. This lever is secured to a pivoted sleeve, $f^{17}$, at the front part of the machine, and connected at its rear end by a socket-sleeve, $f^{18}$, with a lateral pivot-rod, $f^{19}$, the opposite end of which is applied to the upper end of a vertical lever, $f^{20}$, that is pivoted at its lower end to the bed-plate A′. An intermediate roller, $f^{21}$, of the lever $f^{20}$ is engaged by a grooved cam, $f^{22}$, on the main shaft S, as shown clearly in Fig. 2, whereby a laterally-oscillating motion is imparted to the lever $f^{20}$ and to the horizontally-oscillating lever $f^{16}$. This motion is transmitted by the lever $f^{16}$ to the bell-crank lever $f^{12}$, as shown in Fig. 4[a], whereby the cams $f^{13}$ of the pivot $f^{\times}$ move the jaw-holding shanks $f^9$ in opposite directions to each other, so as to open the jaws $f^{10}$. An exterior heel, $f^{23}$, of the pivot $f^{\times}$ is acted upon by the free end of a strong spring, $f^{24}$, which is attached to a projection of the guide-piece $f^7$. The spring $f^{24}$ serves to return the jaws of the carrier into closed position as soon as the oscillating lever $f^{16}$ recedes from the stud $f^{15}$ of the bell-crank lever $f^{12}$. The jaws $f^{10}$ of the carrier F take hold of the projecting end of the wire, which is then cut by the knives, after which the carrier is moved with the nail-blank forward until its jaws $f^{10}$ arrive vertically above the jaws of the lower nail-forming die, at which point the jaws are opened, so that the nail-blank is dropped into the jaws of the lower die. The carrier F is then moved backward again into its rearmost position above the projecting end of the wire, so as to be out of the way of the drop-die, by which the head of the nail or tack is formed.

*The nail-forming dies.*—The dies by which the proper shape is given to the head of the nail or tack are shown in Figs. 1, 7, and 8. They consist of the lower die, G, which is formed of two jaws, $g$ $g'$, that form a kind of anvil, and of the drop-die G′. The jaw $g$ is fixed and supported on a vertically-adjustable rest-block, $g^2$, of the supporting-frame of the machine. The second jaw, $g'$, is pivoted at its lower end to a socket of the fixed jaw $g$, and acted upon by a strong spring, $g^3$, which presses the jaw $g'$ tightly against the jaw $g$. The movable jaw $g'$ is moved laterally against the tension of the spring $g^3$ by a stirrup, $g^4$, which extends around the movable jaw $g'$, and which is attached to a horizontally-guided piece, $g^5$, the heel $g^6$ of which is engaged by a keeper, $g^7$, secured rigidly to the upper end of a fulcrumed lever, $g^8$. The lower end of the fulcrumed lever $g^8$ engages by a roller-pin, $g^9$, a cam-groove, $g^{10}$, of the lower shaft, S[2], whereby a laterally-oscillating motion is imparted to the lever $g^8$. A check, $g^{11}$, at the upper end of the fulcrumed lever $g^8$ is adjusted by a set-screw, $g^{12}$, to the guide-piece $g^5$, whereby the exact degree of lateral motion of the movable jaw $g'$ is regulated. By the action of the lever $g^8$ and check $g^{11}$ the guide-piece $g^5$ is moved sidewise, so as to press the jaw $g'$ against the fixed jaw $g$, while by the action of the keeper $g^7$ on the heel $g^6$ of the guide-piece the jaw $g'$ is moved away from the fixed jaw $g$, and thereby the jaws $g$ $g'$ opened. When the nail-blank carrier F arrives at the forward end of its motion, the nail-blank is vertically above the jaws $g$ $g'$, which are then in open position. The carrier F drops the nail-blank into the socket formed by tapering grooves in the faces of the jaws $g$ $g'$, which are then closed on said shank, so as to firmly hold the blank in position. As soon as the carrier F has delivered the blank to the jaws $g$ $g'$, it (the carrier) is moved back, so as to be out of the way of the drop-die G′, which then drops and forms the head of the nail or tack. The drop-die G′ corresponds to the size and shape to be imparted to the nail-head, and is adjusted by set-screws $g^{13}$ in a vertical socket, $g^{14}$, which socket is supported by a horizontal shank, $g^{15}$, that extends at right angles from the socket in a sleeve-shaped portion, $g^{16}$, of the vertical shank G[2] of the drop-die G′. Set-screws $g^{17}$ secure the horizontal shank $g^{15}$ of the socket $g^{14}$ rigidly in the enlarged portion $g^{16}$. The proper position of the drop-die G′ in the socket $g^{14}$ is adjusted by a set-screw, $g^{18}$, which is vertically in line with the center of the drop-die G′, said set-screw being furthermore secured by a second horizontal set-screw, $g^{19}$. By means of the set-screws $g^{13}$, $g^{17}$, and $g^{18}$ the drop-die G′ can be set into exact position relatively to the lower die, G, as required by the size of the head to be formed. A headed rod, $g^{20}$, is applied to the upper end of the shank G[2] of the drop-die, and acted upon by a strong V-shaped or other spring, G[3], of wood or other suitable material, which is connected to the ceiling or other point of support. The upper end of the spring G[3] is connected by straps $g^{21}$ and clamp-screws $g^{22}$ to slotted side rods, $g^{23}$, that are secured to bracket-plates $g^{24}$ of the shank G[2] of the drop-die. The spring G[3] serves to impart a greater or smaller force to the blows of the drop-die, according as larger or smaller

nails are to be made on the machine. The operation of this spring is fully described in the patent heretofore referred to, and requires, therefore, no further description. The shank $G^2$ of the drop-die G′ is guided in vertical ways $g^{25}$ of the supporting-frame A of the machine, the weight of the shank and die-sockets portion imparting, in connection with the force of the spring $G^3$, the required power by which the head of the nail is formed. The shank $G^2$ of the drop-die is lifted at the proper moment by a cam, $g^{26}$, on the lower shaft, $S^2$, and dropped at the required moment. To cushion the blow of the drop-die the enlarged portion $g^{16}$ drops on a leather or other cushion, $g^{27}$, at the upper end of the guideways $g^{25}$ of the shank $G^2$, so as to prevent the striking of metal against metal, and prevent also the battering or injuring of the heads of the jaws $g$ $g'$ of the lower die, G.

*The throwing-out mechanism.*—This mechanism is shown in Figs. 1, 3, and 4. It consists of a throwing-out lever, $h$, that is placed between the jaws $g$ $g'$ of the lower die, G, and secured adjustably to a socket, $h'$, of a horizontal rod, $h^2$, which turns in fixed bearings $h^3$ of the supporting-frame. A crank-arm, $h^4$, connects the shank of the socket-rod $h^2$ with a pivot-rod, $h^5$, and a fulcrumed lever, $h^6$, at the lower part of the machine. The opposite end of the lever $h^6$ is provided with an inclined nose, $h^7$, that is engaged by a projecting steel nose, $h^8$, of a cam, $h^9$, on the lower shaft, $S^2$. At each revolution of the shaft $S^2$ the lever $h$ is thrown forward, which motion takes place at the moment when the lower jaws, $g$ $g'$, are separated from each other after the head of the nail has been formed by the blow of the drop-die G′. The nail is thereby ejected with considerable force from the jaws $g$ $g'$, and dropped in a suitable receptacle arranged for this purpose at the front part of the machine. The jaws are held in open position until the next blank is conducted to them by the carrier F, the throwing-out lever $h$ being returned into its normal position between the jaws, as shown in Fig. 3.

*Operation of the machine.*—The general operation of the machine is the same as that of the machine heretofore patented to me. The wire is fed by the feeding mechanism to the wire-holding mechanism and to the cutting-knives, and cut in a diagonally-curved line across the wire in such a manner that a larger portion is formed at the upper part, and a small pointed shank at the lower part, of the blank. The head of the nail-blank is taken hold of by the jaws of the nail-blank carrier, which conducts the nail-blank to the jaws $g$ $g'$ of the lower die, G, the latter holding the shank of the nail-blank until the blow of the drop-die forms the head of the same. The carrier moves back toward the cutting-knives after the jaws $g$ $g'$ have taken up the nail-blank, and takes up the next blank which is cut from the wire by the cutting-knives, the wire having been fed forward by the action of the wire-feeding mechanism. As soon as the nail or tack is formed, it is thrown out by the ejecting-lever. Each complete revolution of the driving-shaft will form, by the successive action of the mechanisms described, one complete nail or tack, the head of which may be of any size or shape, and either plain or fancy, as required.

Having thus described my invention, I claim as new and desire to secure by Letters Patent—

1. The feed mechanism herein described, consisting of an oscillating lever, $d^2$, socket $d^3$, steel cheek $d^4$, an adjustable jaw, $d^9$, a hinged oscillating lever, $d^7$, a slotted pivot-arm, $d^{11}$, having a pin, $d^{12}$, and shaft S, having a nose, $d^{13}$, substantially as set forth.

2. In the feed mechanism herein described, the combination of the oscillating lever $d^2$, having a socket, $d^3$, a cylindrical steel cheek, $d^4$, set-screw $d^5$, hinged lever $d^7$, guide-sockets $d^8$, steel jaw $d^9$, and set-screw $d^{10}$, substantially as set forth.

3. In a blank-carrying mechanism for nail-machines, the combination of the parallel sliding shanks $f^9$, having the blank-holding jaws, and having the recesses $f^{14}$, the pivot $f^{\times}$, having the cams $f^{13}$, and means, substantially as described, for rocking the pivot $f^{\times}$, as and for the purpose shown and set forth.

4. In a blank-carrier for nail-machines, the combination of the parallel sliding shanks $f^9$, having the blank-holding jaws and the recesses $f^{14}$, the pivot $f^{\times}$, the elbow-lever $f^{12}$, having lug $f^{23}$, the spring $f^{24}$, and the means, substantially as shown and described, for holding the elbow-lever tilted during the rearward stroke of the carrier, as and for the purpose shown and set forth.

5. In a nail-machine, a nail-blank-carrying mechanism consisting of the parallel shanks $f^9$, having jaws $f^{10}$, guide-piece $f^7$, pivoted elbow-lever $f^{12}$, having a heel, $f^{23}$, spring $f^{24}$, oscillating lever $f^{16}$, lateral connecting-rod $f^{19}$, oscillating lever $f^{20}$, having a roller-pin, $f^{21}$, and shaft S, having cam-groove $f^{22}$, whereby the jaws are opened or closed at the proper moment, substantially as specified.

6. In a nail-machine, the combination of the parallel shanks $f^9$, having jaws $f^{10}$, a guide-piece, $f^7$, a fixed angular guide-arm, $f^8$, a reciprocating arm, $f^4$ $f^6$, having end collars, $f^3$, a fixed guide-sleeve, $f^5$, a pivoted lever, $f^2$, connecting crank-rod $f'$, and shaft S, having cam $f$, whereby a reciprocating forward and backward motion is imparted to the nail-blank carrier, substantially as set forth.

7. In a nail-machine, the combination of the fixed wire-holding jaws $d^{16}$, cutting-knives $e^5$, fulcrumed knife-levers E E, and shaft $S^2$, having cam-grooves $e^3$, engaging rollers $e'$ of the knife-levers, whereby a laterally-oscillating motion is imparted to the cutting-knives, substantially as set forth.

8. The combination of the lower holding-

dies, G, composed of a fixed jaw, $g$, and a laterally-movable jaw, $g'$, with a horizontally-reciprocating guide-piece, $g^5$, having a stirrup, $g^4$, and heel $g^6$, fulcrumed lever $g^8$, having a keeper, $g^7$, and adjustable cheek $g^{11}$, and shaft S, having cam-groove $g^9$, engaging a roller of the lever $g^8$, so as to open or close the jaws, substantially as set forth.

9. The combination of the drop-die G′, a vertical socket, $g^{14}$, having set-screws $g^{13}$ and horizontal shank $g^{15}$, main shank $G^2$, having a sleeve, $g^{16}$, and set-screw $g^{17}$, and a set-screw, $g^{18}$, in line with the drop-die G′, substantially as set forth.

10. The combination of the drop-die G′, vertical socket $g^{14}$, having a horizontal shank, $g^{15}$, a vertically-guided main shank, $G^2$, having sleeve $g^{16}$, and shaft $S^2$, having a cam, $g^{26}$, said cam lifting and dropping the main shank of the drop-die, substantially as described.

In testimony that I claim the foregoing as my invention I have signed my name in presence of two subscribing witnesses.

RUDOLF EGLI.

Witnesses:
LOUIS C. RAEGENER,
SIDNEY MANN.