United States Patent [19]

Eaton et al.

[11] **3,750,282**

[45] **Aug. 7, 1973**

[54] **SCISSORS**

[75] Inventors: **Douglas G. Eaton**, Lakewood; **Wade L. Wacker**, Ashland; **Theodore C. Appleman**, Mansfield, all of Ohio

[73] Assignee: **Web Products Inc.**, Ashland, Ohio

[22] Filed: **Oct. 4, 1972**

[21] Appl. No.: **294,932**

Related U.S. Application Data

[63] Continuation-in-part of Ser. No. 77,814, Oct. 5, 1970, abandoned.

[52] **U.S. Cl.** **30/254**, 30/266, 30/341

[51] **Int. Cl.** **B26b 13/02**, B26b 13/28

[58] **Field of Search** 30/252, 254, 266, 30/341, 260, 268, 269, 271

[56] **References Cited**

UNITED STATES PATENTS

2,627,656	2/1953	Richartz	30/254
2,965,967	12/1960	Wahl	30/341
3,376,641	4/1968	Usborne	30/266

Primary Examiner—Othell M. Simpson
Attorney—Thomas D. Shaffner

[57] **ABSTRACT**

The specification and drawings disclose scissors which are particularly suited for use as disposable surgical scissors. The embodiment shown comprises a pair of pivotally interconnected handle and blade units with each handle and blade unit including an elongated molded plastic handle section having first and second end portions with a finger receiving loop at the first end portion and a blade member molded in the second end portion. The blade member is formed from a relatively thin strip of metal and has a cutting blade section and a somewhat narrower shank end. The shank end extends longitudinally into the handle section, whereas the cutting blade section extends outwardly from the handle section. Preferably, the shank end is substantially completely molded within the handle. Additionally, the second end portion of the handle preferably extends outwardly along one lateral face of the cutting blade section and means are provided for connecting the outermost end of the second end portion to the blade.

4 Claims, 6 Drawing Figures

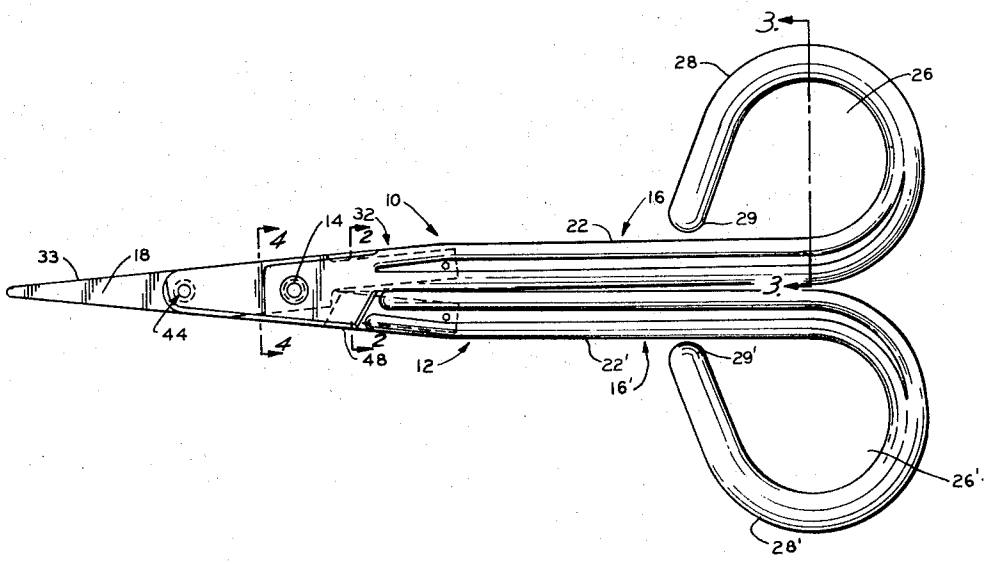

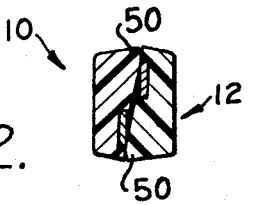

Fig. 2.

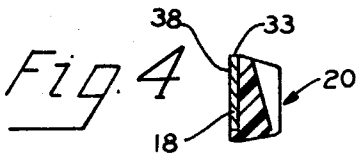

Fig. 4

Fig. 1.

Fig. 3.

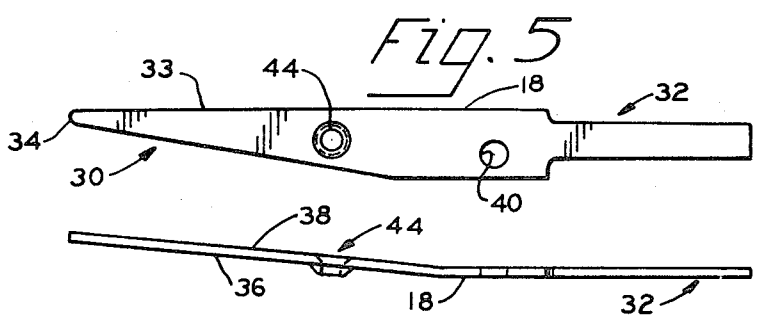

Fig. 5

Fig. 6

SCISSORS

This application is a continuation, in part of application Ser. No. 77,814 filed Oct. 5, 1970, now abandoned.

This invention is directed to the cutting art and, more particularly, to molded plastic scissors with metallic blade inserts or attachments.

The invention is expectially suited for disposable surgical scissors and will be described with particular reference thereto; however, it will be appreciated the invention is capable of broader application and could be embodied in scissors of many types and for many uses.

In recent years, the increases in hospital labor costs have made it economically desirable to use disposable supplies and equitpment. A large number of items which were previously sterilized and reused have been replaced by relatively inexpensive disposable substitutes. With many items, however, it is still preferable to use conventional reusable equipment and supplies and resterilize them. This has been expecially true with regard to surgical tools and the like. For example, with surgical scissors the cost of a pair which will function satisfactorily has heretofore been far in excess of what it costs to resterilize.

The subject invention provides a scissor construction and method of making the same, which allows a comparatively high quality pair of surgical scissors to be made very inexpensively. Surgical scissors formed in accordance with the invention can be manufactured at a price which allows them to be considered as a disposable item since their cost is less than or substantially equal to the cost of collecting and resterilizing conventional surgical steel scissors. Further, sterilization is assured since each pair is separately packaged as a sterile unit and is not intended for reuse as a sterile item.

In accordance with the invention, the scissors comprise a pair of handle and blade units which are preferably, but not necessarily, substantially identical in construction. Each handle and blade unit comprises an elongated, molded plastic handle section having a first end portion forming a finger receiving loop or opening, and a relatively thin steel blade member molded in the opposite end portion. Preferably, the blade member has a relatively narrow shank end portion which is enclosed by the end portion of the plastic handle section, and a blade portion which has one lateral face exposed and its other lateral face covered throughout a substantial portion of its length by the end portion of the handle section. Additionally, the blade portion and the terminal end of the handle are desirably joined by an opening in the blade through which is molded some of the plastic of the handle section.

In accordance with a more limited aspect, the invention contemplates that the pair of handle and blade units are positioned with the exposed faces of their blade portions in face-to-face engagement and pivotally connected by a pin passing through both the metallic blades and the end portions of the handle sections. Also, it is contemplated that the blades will be laterally curved throughout a substantial portion of their length such that when they are joined they will have a bias toward one another to increase their cutting ability.

Because of the manner in which the blade sections are joined to the molded handle sections, there is a mutual reinforcing of both in the areas of maximum stree i.e. about the pivot point. This permits both the blade sections and the handle sections to be somewhat lighter. Further, the arrangement is such that the blades are continually biased into proper cutting relationship.

Accordingly, a preimary object of the invention is the provision of scissors which are formed from a combination molded plastic and metal blade members in a manner which allows them to function substantially as well as high quality surgical steel scissors.

Yet another object of the invention is the provision of scissors of the type described wherein metal blade inserts or attachments are molded integrally with plastic handle sections so that the blade portions are rigidly connected with the handle sections.

A further object is the provision of a scissor construction of the general type described in which the handle sections and the blade sections are interrelated in a manner which provides a mutual reinforcing of each at the points of maximum stress.

These and other objects and advantages will become apparent from the following description when read in conjunction with the accompanying drawings wherein;

FIG. 1 is a plan view of a pair of surgical scissors formed in accordance with the preferred embodiment of the invention;

FIG. 2 is a cross-sectional view taken on line 2—2 of FIG. 1;

FIG. 3 is a cross-sectional view taken on line 3—3 of FIG. 1;

FIG. 4 is a view taken on line 4—4 of FIG. 1 showing only the top blade-handle unit;

FIG. 5 is a plan view of blade;

FIG. 6 is a side view of the blade

Referring more particularly to FIG. 1, the surgical scissors are shown as comprised of two identically formed blade and handle units 10 and 12 which are pivotally interconnected by a pivot pin member 14 which passes through aligned openings formed in each of the handle and blade units. Any type of pivot pin member could be used; hwever, in the preferred embodiment, the pivot pin comprises a short section of brass or copper tubing which is rolled over at its opposite ends to firmly affix blade and handle section together.

Although the handle and blade units 10, 12 could have differing constructions, they are preferably identical as previously mentioned. Accordingly, only one will be described in detail and like reference numerals differentiated by a prime suffix will be used to identify the corresponding parts of the other unit. A description of one such part is to be taken as applicable to the other unless otherwise noted. In particular, each of the blade and handle units, includes an elongated, molded plastic section 16 and a cutting blade portion 18 which is integrally molded into the handle 16 to provide a rigid handle and blade unit. The interrelationship of the handle 16 and the blade 18 will subsequently be described in substantial detail. However, referring to FIGS. 2 and 3, it is seen that the handle section 16 includes a first end portion 20 into which is molded the blade member 18. An intermediate section 22 of the handle 16 is formed preferably as shown in FIG. 3. Note that the intermediate section 22 has a cross-section somewhat in the nature of an I-beam. That is, it is comprised of two relatively heavy flange sections 23 and 24 interconnected by a short, relatively thin web section 25. This construction provides a substantial amount of strength in the direction of primary force application while permitting the use of a comparatively small amount of mate-

rial to permit both the weight and cost to be reduced. The particular type of plastic used for the handle sections is not critical but is preferably a thermoplastic, such as polyethylene, polypropylene, ABS, polystyrene, etc.

Formed integrally with the intermediate section **22** of handle section **16** is a finger receiving opening or loop **26** defined by the curved end portion **28** which is of a somewhat eliptic cross-section as best shown in FIG. **3.** It will be appreciated that the resilient nature of the plastic and the curved shape of the finger receiving portion with its free end **29** allows the finger receiving opening **26** to expand to receive different size fingers.

The blade members **18** could be formed from many types of metal but in the preferred embodiment they are formed from a relatively thin narrow strip of tempered stainless steel. Each of the blade members is shown as including a blade end portion **30** and a shank end portion **32.** The blade end portion **30** has a cutting edge **33** formed along at least one edge. The cutting edge can be merely a sharp cornered perpendicular edge face and does not have to taper to a single edge like a knife blade. In the embodiment under consideration, the blade end portion **30** is tapered throughout a major portion of its length and terminates in a rounded outer end **34.** It will be understood that this taper forms no part of the invention.

Preferably, the shank end portion **32** of blade member **18** is somewhat narrower than the main portion of the blade and is of a length substantially equal to one-third of the total length of the blade member. Formed transversely between the lateral blade faces **36** and **38** is a pivot pin receiving opening **40** sized so as to closely receive the pivot pin member **14.** For reasons which will hereafter become apparent, the blade is curved relatively uniformly from the position in proximity to opening **40** to the outer blade end portion.

The relationship between the blade **18** and the end portion **20** of handle **16** is relatively important and can best be understood by reference to FIGS. **1, 2** and **5.** As shown, the shank end portion **32** of blade **18** is completely molded within the handle and in the embodiment is located at the junction between end portion **20** and the intermediate portion **22** of the handle section **16.** The inner face **38** of blade **18** is completely exposed from a point adjacent the juncture of the handle intermediate portion **22** and the end portion **20** to the outer free end **34** of the blade. For strudtural reasons, the end portion **20** of the handle **16** extends outwardly along the outer surface or face **36** to a point of approximately half the distance from the opening **40** to the free end of the blade. It will be noted from FIGS. **1** and **5** that the end portion **20** extends along the blade edge opposite the cutting edge **33.** By providing a portion to extend downwardly along this edge of the blade, a more rigid force engaging portion is provided to counteract the forces generated through cutting operation of the scissors. Additionally, to more firmly and ridigly interconnect the blade section and the handle section, an opening **44** is formed through the blade section intermediate the pivot pin opening **40** and the free end **34.** As shown in FIGS. **2** and **8,** the opening **44** if countersunk or tapered so that when the handle is molded about the blade, a portion of the plastic flows into the opening **44** to provide an interlock between the outer end portion of the handle and the blade. This interlock effectively amounts to molded rivet integral with the handle. It will also be noted that the outer end portion **20** of the handle **22** is tapered from adjacent the opening **44** to its outer end and, further, that it conforms in general to the curvature of the blade. Additionally, at the location of the pivot pin opening the handle end portion is substantially thicker. This provides additional strength and bearing surface for the pivot pin member **14** and allows the assembled blade and handle units to have substantial resistance against rotation in directions perpendicular to the axis of the pivot pin **14** (i.e. in directions other than the normal movement of the blades relative to one another).

As previously mentioned, each of the handle and blade units **10** and **12** are preferably identical. When assembled, they are positioned with surfaces **38** of each of the united in engagement and the pivot pin openings aligned. The blades are laterally curved, as shown in FIG. **6,** so that when assembled the blades are biased toward each other. As can be appreciated, a substantial bias on the blades thus acts to force them together. This assists in maintaining proper engagement of the cutting edges during a cutting operation.

In addition to the biasing together of the blades by the curved shape, proper mating is further assured by cooperated wedge surfaces formed on the end portion **20** of the handle **16.** The wedge portions are as best shown in FIG. **2.** As will be seen in FIG. **1,** a portion **48** extends laterally of the end portion **20.** On the undersurface of portion **48,** an inclined wedge surface **50** extends downwardly and at an inclination relative to a plane perpendicular through the pivot pin axis **14.** Accordingly when the blades are assembled, the wedges **50** engage as the two units start moving to a closed position. This biases the blades together prior to the biasing produced by the curvature of the blades.

From the above description, it is apparent that the relationship between the metal blades or blade inserts, and the molded plastic handles is such as to provide a very strong and rigid pair of scissors. Because of their construction, the scissors can be made inexpensively such that they can be used as disposable surgical scissors. Clearly, many variations and modifications of the structure shown in the preferred embodiment can be made without departing from the invention as set forth in the appended claims.

We claim:

1. Scissors comprising of a pair of essentially identical pivotally interconnected handle and blade units, each handle and blade unit including an elongated molded plastic handle section having first and second end portions with a finger receiving loop at the first end portion and a blade member molded in the second end portion, an opening passing through the handle section and molded-in blade member of each handle and blade unit with pivot pin means therein pivotally interconnecting one handle and blade unit to the other with the respective blade members being in opposed cutting relatinship, each said blade member being formed from a relatively thin strip of metal having a shank and extending longitudinally into said handle section end a blade end portion extending outwardly from said handle section, each blade end portion having a cutting edge along at least one lateral edge, each blade end portion being laterally curved toward the other blade end portion to provide opposed cutting edges curved toward each other, the second end portion of each handle extending outwardly beyond the pivotal intercon-

nection along one lateral face of said blade end portion and having an integral portion hot molded within an opening in the lateral face of the blade, each handle and blade unit including a wedge shaped camming surface thereon positioned on the side of the pivotal connection adjacent the first end, each wedge shaped camming surface being inclined relative to a plane perpendicular to the pivot pin means and being relatively higher on the side of the handle and blade unit opposite the cutting edge than on the side of the cutting edge, the camming surface on one handle and blade unit cooperatively engaging the camming surface on the other handle and blade unit whereby upon closing the scissors the relatively thicker portions of the opposed wedge shaped camming surfaces contact before the relatively thinner portions thereof thereby causing the respective blade members to be biased toward each other.

2. The scissors of claim 1 further characterized in that the elongated handle section has a cross section of I-beam construction comprising a web section joining flange sections.

3. The scissors of claim 1 further characterized in that the second end portion of each handle extends outwardly beyond the pivotal interconnection to a point which is approximately one half of the distance between the pivotal interconnection and the free end of the blade.

4. The scissors of claim 1 further characterized in that the opening in the lateral face of the blade has tapered sides and the integral portion of the handle hot molded therein comprises a molded rivet integral with the handle.

* * * * *