July 3, 1951 C. W. WIKMAN 2,559,380

EXTENSION DRAWER FOR FILING CABINETS

Filed Jan. 31, 1946 2 Sheets-Sheet 1

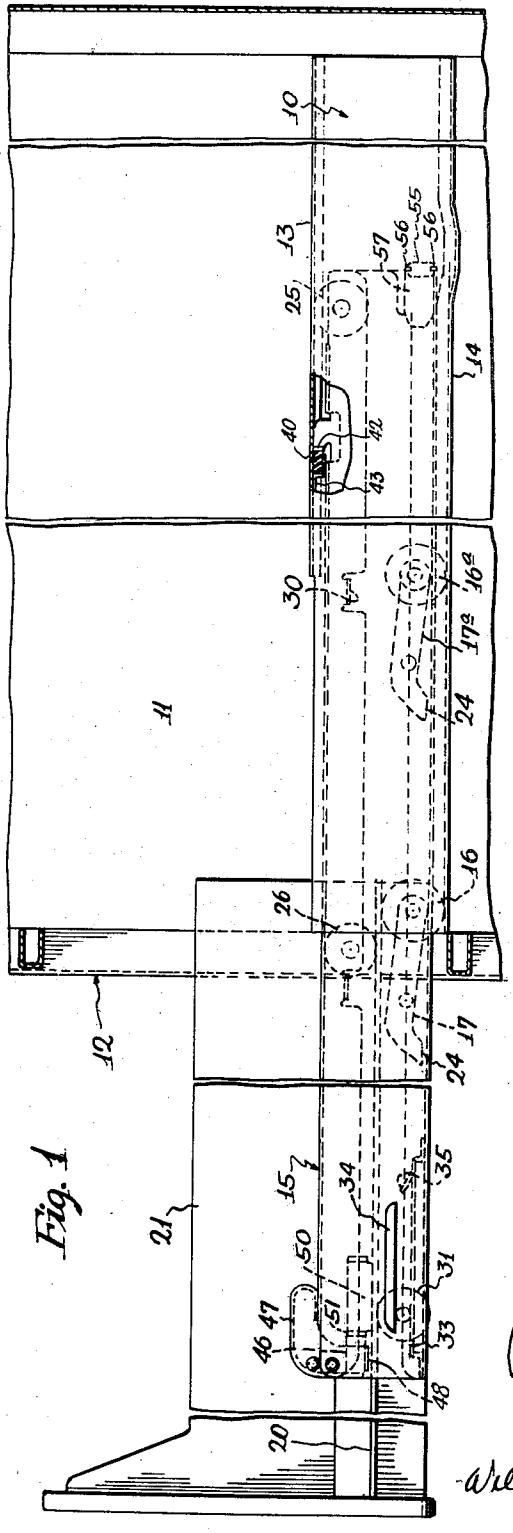

Fig. 1

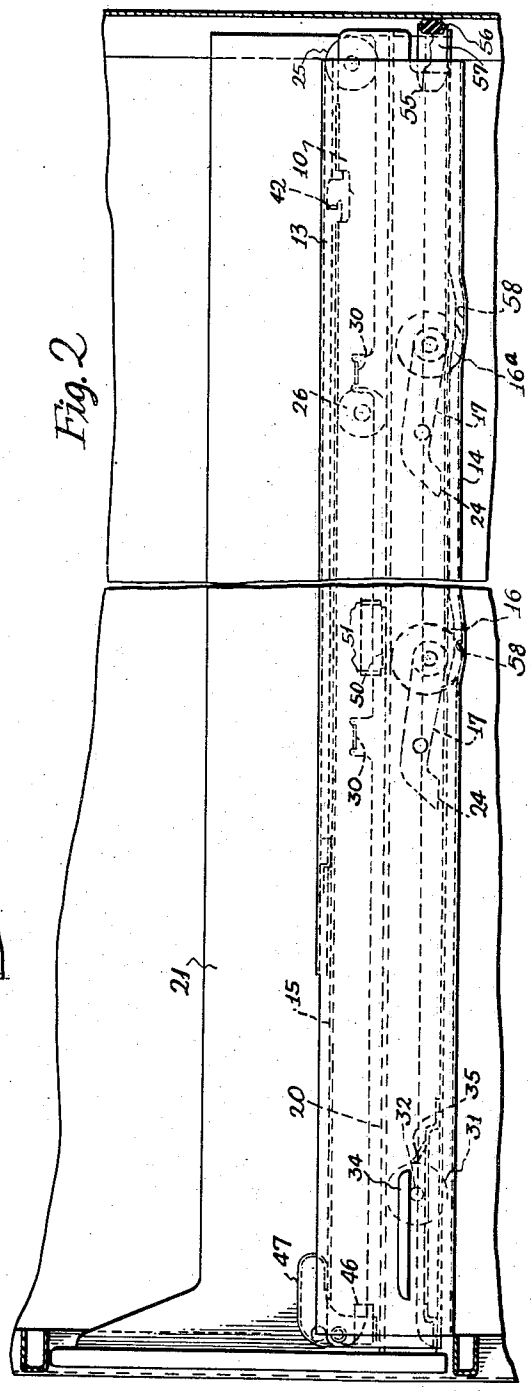

Fig. 2

INVENTOR
Carl W. Wikman
Wilkinson Huxley Byron & Knight
ATTORNEYS

July 3, 1951 C. W. WIKMAN 2,559,380

EXTENSION DRAWER FOR FILING CABINETS

Filed Jan. 31, 1946 2 Sheets-Sheet 2

Fig. 3

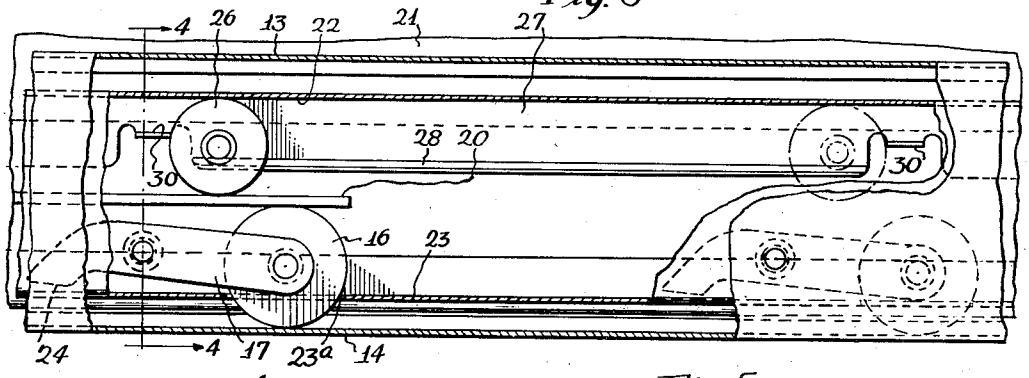

Fig. 4

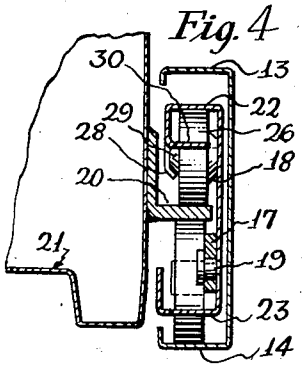

Fig. 5

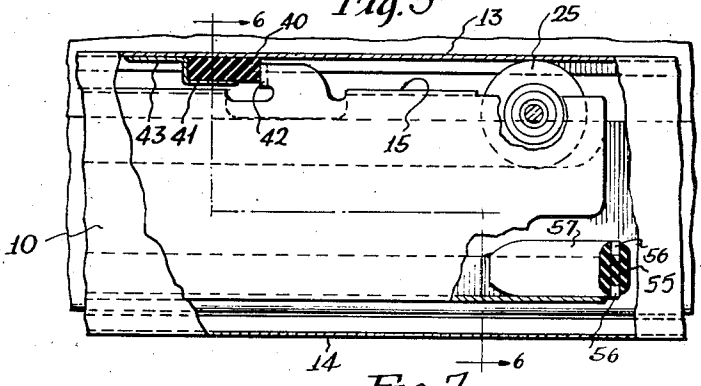

Fig. 6

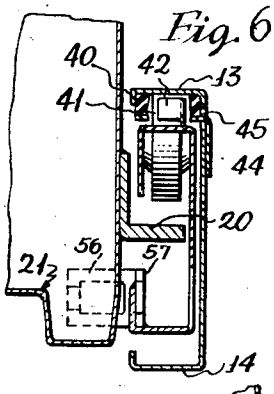

Fig. 7

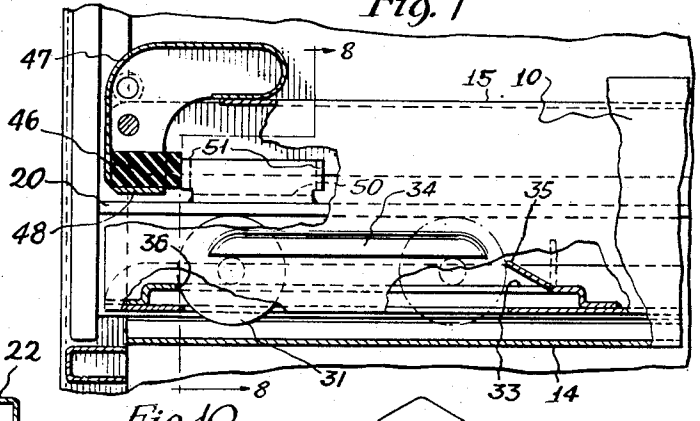

Fig. 8

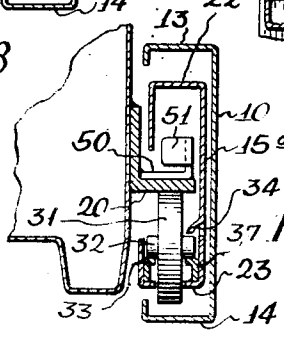

Fig. 10

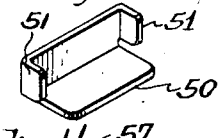

Fig. 9

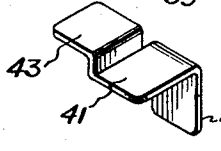

Fig. 11

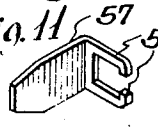

INVENTOR
Carl W Wikman
Williamson Hurley Byron & Knight
ATTORNEYS

Patented July 3, 1951

2,559,380

UNITED STATES PATENT OFFICE

2,559,380

EXTENSION DRAWER FOR FILING CABINETS

Carl W. Wikman, Muskegon, Mich., assignor to The Shaw-Walker Company, Muskegon, Mich., a corporation of Michigan

Application January 31, 1946, Serial No. 644,638

5 Claims. (Cl. 312—339)

1

This invention relates to improvements in progressive suspension or slides, employed for slidably supporting file drawers and analogous slidable elements which comprise a stationary rail in the cabinet, a rail fastened to and moving with the drawer, and an intermediate traveling or extension member which, when the drawer is moved in or out travels in the same direction as the drawer, but at a reduced speed so that when opening the drawer the extension member will automatically travel out from the cabinet and hold the drawer in a horizontal position.

Among the objects of the invention is to provide a progressive drawer suspension which can be economically manufactured from sheet metal, the structural parts being so designed as to readily lend themselves to be manufactured in production dies in punch presses.

A further object of the invention is to provide for ease of operation and exceptional ability to withstand wear through the use of floating or traveling rollers at points of greatest strain and wear, said rollers rolling between the moving elements of the slide instead of being journalled in bearings, thus avoiding excessive friction, also preventing the pinching action on the drawer rail commonly present in slides with fixed position rollers, so as to have a tendency to split or wear through the drawer rails, thus shortening the effective service of the slide.

A still further object of the invention is to provide for quiet operation through the use of rubber or similar resilient bumper stops at all points where mechanical stops are used to limit the travel of the drawer within prescribed limits. The aforementioned bumper stops are housed in sheet metal housings, being readily insertable and held in place without the use of rivets or other fastenings.

Another object is to provide a progressive drawer suspension which allows the drawer also the extension member to be removed from the cabinet without the use of tools or the removal of any screws or other fastenings.

With the above and other objects and advantages in view, which will hereinafter appear, a preferred embodiment of my invention is disclosed in the accompanying drawings as hereinafter described, and the novel features of the invention are set forth in the appended claims.

In the drawings:

Figure 1 is a side elevation of the slide with parts broken away, showing the drawer in fully open or extended position in the cabinet.

Figure 2 is a view similar to Figure 1, but showing the drawer in fully closed position.

Figure 3 is a fragmentary side view drawn to a slightly larger scale than the preceding figures, with parts broken away to show details

2

adjacent the rear of an intermediate portion of the slide with the drawer in fully opened position.

Figure 4 is a detail section taken on line 4—4 of Figure 3.

Figure 5 is a fragmentary side view with parts broken away to show details of the rear end of the extension member when the drawer is in fully opened position.

Figure 6 is a detail section taken on line 6—6 of Figure 5.

Figure 7 is a fragmentary side view with parts broken away to show details of the slide at the front of the cabinet when the drawer is in fully closed position.

Figure 8 is a detail section taken on line 8—8 of Figure 7.

Figure 9 is a detail perspective view of a metal stop and bumper fixed on the base rail for limiting relative movement of the extension member.

Figure 10 is a detail perspective view of a metal stop mounted on the drawer rail for limiting the relative movement thereof with respect to the extension member.

Figure 11 is a detail perspective view of a metal bumper holder fixed on the rear end of the extension member for engaging the rear wall of the cabinet.

Referring to details of the embodiment of my invention shown in the drawings, a primary slide member or base rail 10 preferably formed of sheet metal bent in generally C-shaped section, and suitably fixed as by welding to the inner face of side 11 of cabinet 12. Said base rail includes upper and lower longitudinal flanged guides 13 and 14, between which is telescopically mounted the intermediate slide or extension member 15. Said extension member is also formed of sheet metal, bent in generally C-shaped section. Two longitudinally spaced progression rollers 16, 16a are mounted on longitudinally extending roller links 17, 17a pivoted to the upright side wall 15a of the extension member 15 by pivot pins 19. Said rollers and their respective links are disposed near the bottom of said extension member, with the lower parts of the rollers projecting through slots 23a in the lower guide flange 23 of said extension member so as to engage the lower guide 14 of the base rail. The top of the forwardmost progression roller 16 normally provides supporting engagement for a drawer rail 20 fixed along the side of the drawer 21 and extending laterally into telescopic spaced relation between the upper and lower guides 22 and 23 of the extension member 15.

The rearwardmost progression roller 16a is of slightly smaller diameter than the forward roller 16 and acts to prevent the tipping down of the rear, and raising of the front of the drawer

when the drawer approaches its closed position and has the load concentrated at the rear of the drawer.

The free ends of the roller links 17 and 17a opposite the respective rollers 16 and 16a are each provided with a downwardly extending shoe 24 which normally has a slight clearance above the bottom flange 23 of the extension member to limit the amount of vertical movement of its respective roller, thus preventing the rollers from getting out of position and falling from the slides.

A roller 25 is journalled at the rear or inner end of the extension member 15, above the drawer rail 20, in position to engage the upper guide 13 of the base rail 10, as shown in Figure 5.

An upper traveller roller 26 is mounted for free rolling movement between the drawer rail 20 and the upper guide 22 of the extension member 15, as shown in Figures 3 and 4. To hold said roller in place, the upper guide 22 has a downwardly extending flange 27 along its inner side, with an angularly inturned bearing strip 28 adapted to fit in rolling engagement beneath an integral hub 29 on the inner side of said roller 26. (See Figure 4.) The bearing strip 28 is of sufficient length to permit the roller to traverse from one end thereof to the other while the drawer is moved from its fully closed to fully opened position, and vice versa. Further movement of the roller 26 is limited by suitable stops, herein formed by bending ears 30, 30 inwardly from the side flange 27 at opposite ends of the bearing strip 28, across the path of the roller 26.

The forward end of the drawer rail 20 is supported on the extension member 15 by a travelling roller 31 as shown in Figures 7 and 8. Said roller has a short axle 32 which rides along upstanding tracks 33, 33 at opposite sides thereof, suitably fixed to the bottom guide 23 of the extension member. The upstanding tracks 33, 33 are preferably formed by cutting an elongated slot along the top of an inverted U-shaped sheet metal piece 37 mounted on the bottom guide 23.

The roller 31 is held in place beneath a longitudinally extending retaining lip 34 formed along the outer wall 15a of the extension member 15 as by slitting said wall longitudinally and pressing the upper edge of said slit inwardly, as shown in Figure 8. The tracks 33 and inturned lip 34 are of sufficient length to permit the roller to traverse from one end to the other while the drawer is moved from its fully closed to its fully opened position, and vice versa. Further rearward movement of the roller is limited by a tongue 35 turned upwardly at an inclined angle from the piece 37 at the inner end of the tracks 33, as seen in Figure 7. Said tongue can be bent further upwardly, as indicated in dotted lines in this figure, to permit the roller to be removed from the slide. Forward movement of the roller is limited by engagement with a transverse stop 36 at the front end of the tracks 33.

The cushioned stop means for limiting telescopic movement of the extension member relative to the base rail 10 comprises a rubber bumper 40, supported in a saddle 41 suitably fixed on the under side of the upper guide 13 of the base rail 10, in position to be engaged by an upturned ear 42 on the upper guide 22 of the extension member 15 as shown in Figures 5, 6 and 9. In the form shown, the saddle 41 has a tongue 43 offset upwardly therefrom which is secured flatwise to the upper guide 13, and another tongue 44 extending laterally and at right angles thereto, which projects through a slot 45 in the upright wall of the base rail and is secured to the outer face thereof, as is best seen in Figure 6.

Forward telescopic movement of the drawer relative to the extension member 15 is limited by a rubber bumper 46 mounted in the lower end of an L-shaped hinge stop 47. Said hinge stop is arranged so that it can be pivoted forwardly, to move the lower end out of the path of a stop member 50 on the drawer rail 20, to permit the drawer to be removed from the extension member. The hinge stop 47 formed of sheet metal, is generally of a U-shaped section, with an inturned saddle 48 at its lower end, on which the bumper 46 is mounted so as to project rearwardly therefrom, in position to be engaged by an ear 51 on the drawer stop 50, fixed on the upper surface of the drawer rail 20. The drawer stop 50 is shown in detail in Figure 10, and is formed from a piece of sheet metal, bent in L-shape with inturned ears 51 at opposite ends of the upstanding portion thereof.

A rubber bumper 55 is mounted at the rear end of the extension member, in the form shown, said bumper being secured between two furcations 56, 56 of an L-shaped metal piece 57, welded or brazed to the lower guide 23 of the extension member in position to engage the rear wall of the cabinet 12, when the extension member 15 is moved to its extreme rearward position as shown in Figure 2.

The lower guide 14 of the case rail 10 is slightly depressed at two localized points 58, 58 to register with the rollers 16, 16a when the drawer is in closed position so as to assist in holding said drawer in such closed position.

The parts of the extension slide above described are, of course, duplicated at opposite sides of the drawer.

It will now be understood from the foregoing description that the metallic parts of the slide are so designed as to be made from sheet metal, pressed or drawn to their final form, which can be assembled without screws, bolts, or like fastening devices. The drawer and extension member can be removed or replaced without the use of tools. Moreover, the resilient bumpers and their housings are designed to allow the bumpers to be made by the extrusion process and cut off to proper length, thereby eliminating more costly molded bumpers of the kind usually required for cushioning purposes.

Although I have shown certain embodiments of my invention, it will be understood that I do not wish to be limited to the exact construction shown and described, but that various changes and modifications may be made without departing from the spirit and scope of the invention as defined in the appended claims.

I claim:

1. In an extension slide for drawers and the like, a base rail having upper and lower guide flanges, an extension member also having upper and lower guide flanges telescopically mounted in said base rail, a slide rail projecting laterally between the guide flanges of said extension member, an unpivoted anti-friction roller freely movable along and between said slide rail and the lower guide flange of said extension member, said roller having a hub projecting at both sides thereof, track means for said hub on said extension member and supporting said roller free of rolling engagement with said base rail comprising an inverted U-shaped metal piece fixed on said lower guide flange of said extension member

and provided with an elongated slot through and along which the periphery of said roller may travel, and retaining means for said roller comprising a rail formed by pressing inwardly the portion of the side wall of said extension member over the hub at one side of said roller, the slot in said U-shaped member being extended beyond one end of said retaining rail to permit removal and insertion of the roller and its hub in said slot, and said U-shaped member being formed with an integral bendable portion of said slot at the rear end thereof adapted to be moved into position to retain said roller in said slot when said bendable portion is in a predetermined position relative thereto.

2. In an extension slide for drawers and the like, a base rail having upper and lower guide flanges, an extension member also having upper and lower guide flanges telescopically mounted in said base rail, a sliding rail telescopically mounted in said extension member, and means for limiting the extension of said extension member relatively to said base rail comprising a sheet metal saddle having an offset tongue fixed to a guide flange on said base rail so as to form a rearwardly opening socket, a resilient bumper member fitted in said socket, and a portion of the adjacent guide rail of said extension member being bent upwardly in and laterally to form a stop member with said resilient bumper member, said saddle member also having an integral tongue projecting therefrom and extending through the adjacent side wall of said base rail for engagement with the outer face of the latter.

3. In an extension slide for drawers and the like, a base rail having upper and lower guide flanges, an extension member substantially C-shaped in cross section and also having upper and lower guide flanges, said rail and member being each provided with an open side and telescopically nested so that the open sides thereof face in the same direction, a slide rail having a flange extending between the upper and lower guide flanges of the extension member, a traveling roller mounted upon the lower guide flange of the extension member with its upper periphery in supporting engagement with the under-surface of said slide rail, said roller having hub projections at opposite sides thereof, and spaced parallel tracks for said hub projections on said extension member above the level of said lower guide flange thereof, said hub projections engaging said tracks and supporting the roller for free rolling movement therein with the periphery of said roller extending between said spaced tracks, the diameter of said roller being greater than the distance between the lower guide flange of the extension rail and the flange of said slide rail, said lower guide flange of the extension member being slotted in alignment with the space between the tracks and the said roller extending through said slot but out of contact with the lower guide flange of the base rail.

4. In an extension slide for drawers and the like, a base rail substantially C-shaped in cross section and having upper and lower guide flanges, an extension member substantially C-shaped in cross section and also having upper and lower guide flanges, said rail and member being each provided with an open side and being telescopically nested so that the open sides thereof face in the same direction, a slide rail having a flange extending between the upper and lower guide flanges of the extension member, a traveling roller mounted upon the lower guide flange of the extension member with its upper periphery in supporting engagement with the under-surface of said slide rail, said roller having hub projections at opposite sides thereof, and track means for the hubs on said extension member, said track means including an elongated member generally inverted U-shaped in cross section, the base of said inverted U-shaped member being longitudinally slotted, said hub projections engaging said track means and supporting the roller thereon for free rolling movement with the periphery of said roller extending through said slot, the diameter of said roller being greater than the distance between the lower guide flange of the extension member and said slide rail, and said lower guide flange of the extension member being slotted beneath said track means in alignment with the slot of the track means and the said roller extending through said last mentioned slot but out of contact with the lower guide flange of the base rail.

5. In an extension slide for drawers a base rail substantially C-shaped in cross section and having upper and lower guide flanges, an extension member substantially C-shaped in cross section and also provided with upper and lower guide flanges, the base rail and the extension member each having an open side and being telescopically nested with the open sides facing in the same direction, the upper and lower flanges of the extension member being provided with inturned tongue portions terminating in opposed spaced relation, a slide rail having an elongated flange portion projecting within the open side of said extension member between the inturned tongue portions thereof, a roller mounted for free rolling movement on the extension member near one end thereof, the upper periphery of said roller engaging the under surface of the slide rail and supporting same at one end, non-traveling roller means carried by the extension member intermediate the ends thereof and engaging the under surface of the slide rail and the upper surface of the lower guide flange of the base rail and supporting the slide rail for sliding movement with respect to the extension member and supporting the extension member in spaced relation to the lower guide flange of the base rail, the lower periphery of said first-mentioned roller projecting through a slot provided in the lower guide flange in the extension member but out of contact with the lower guide flange of the base rail, and a fixed axis roller carried by the extension member at the opposite end thereof for engaging the under surface of the upper guide flange of the base rail to prevent tilting of the extension member about said intermediate roller means when the extension member is extended.

CARL W. WIKMAN.

REFERENCES CITED

The following references are of record in the file of this patent:

UNITED STATES PATENTS

Number	Name	Date
1,067,404	Callaghan	July 15, 1913
1,376,493	Wickstrom	May 3, 1921
1,725,338	Card et al.	Aug. 20, 1929
1,981,246	Pipe	Nov. 20, 1934
2,157,611	Jones et al.	May 9, 1939
2,331,529	Wolters et al.	Oct. 12, 1943
2,386,757	Straubel	Oct. 16, 1945