(12) INTERNATIONAL APPLICATION PUBLISHED UNDER THE PATENT COOPERATION TREATY (PCT)

(19) World Intellectual Property Organization
International Bureau

PCT

(43) International Publication Date
10 July 2008 (10.07.2008)

(10) International Publication Number
WO 2008/081994 A3

(51) **International Patent Classification:**
G03F 7/20 **(2006.01)**

(21) **International Application Number:**
PCT/JP2007/075410

(22) **International Filing Date:**
27 December 2007 (27.12.2007)

(25) **Filing Language:** English

(26) **Publication Language:** English

(30) **Priority Data:**

60/877,387	28 December 2006 (28.12.2006)	US
12/003,451	26 December 2007 (26.12.2007)	US

(71) **Applicant** *(for all designated States except US):* **NIKON CORPORATION** [JP/JP]; 2-3, Marunouchi 3-chome, Chiyoda-ku, Tokyo 100-8331 (JP).

(72) **Inventor; and**

(75) **Inventor/Applicant** *(for US only):* **SUGIMOTO, Ayako** [JP/JP]; c/o NIKON CORPORATION, 2-3, Marunouchi 3-chome, Chiyoda-ku, Tokyo, 100-8331 (JP).

(74) **Agents: SHIGA, Masatake** et al.; 1-9-2, Marunouchi, Chiyoda-ku, Tokyo, 1006620 **(JP).**

(81) **Designated States** *(unless otherwise indicated, for every kind of national protection available):* AE, AG, AL, AM, AO, AT, AU, AZ, BA, BB, BG, BH, **BR,** BW, BY, BZ, CA, CH, CN, CO, CR, CU, CZ, DE, DK, DM, DO, DZ, EC, EE, EG, ES, FI, GB, GD, GE, GH, GM, GT, HN, **HR,** HU, **ID,** IL, IN, IS, **JP,** KE, KG, KM, KN, KP, KR, KZ, LA, LC, LK, LR, LS, LT, LU, LY, MA, MD, ME, MG, MK, MN, MW, MX, MY, MZ, NA, NG, NI, NO, NZ, OM, PG, PH, PL, PT, RO, RS, RU, SC, SD, SE, SG, SK, SL, SM, SV, SY, TJ, TM, TN, TR, TT, TZ, UA, UG, US, UZ, VC, VN, ZA, ZM, ZW

(84) **Designated States** *(unless otherwise indicated, for every kind of regional protection available):* ARIPO (BW, GH, GM, KE, LS, MW, MZ, NA, SD, SL, SZ, TZ, UG, ZM, ZW), Eurasian (AM, AZ, BY, KG, KZ, MD, RU, TJ, TM), European (AT, BE, BG, CH, CY, CZ, DE, DK, EE, ES, FI, FR, GB, GR, HU, IE, IS, IT, LT, LU, LV, MC, MT, NL, PL, PT, RO, SE, SI, SK, TR), OAPI (BF, BJ, CF, CG, CI, CM, GA, GN, GQ, GW, ML, MR, NE, SN, TD, TG).

Published:

— *with international search report*

— *before the expiration of the time limit for amending the claims and to be republished in the event of receipt of amendments*

(88) **Date of publication of the international search report:**
18 September 2008

(54) **Title:** EXPOSURE APPARATUS, EXPOSING METHOD, AND DEVICE FABRICATING METHOD

FIG. 4

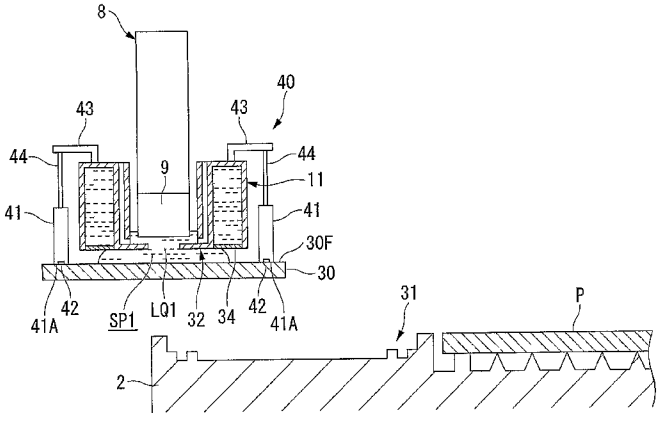

(57) **Abstract:** An exposure apparatus comprises: a first optical member for acquiring positional information about the substrate through a first liquid that is for measurement; a second optical member that emits the exposure beam; a first movable member that holds the substrate and is capable of moving within a prescribed area that includes a first position, which opposes the first optical member, and a second position, which opposes the second optical member; and a first liquid holding member that is capable of moving to the first position; wherein, by disposing at least one of the first movable member and the first liquid holding member at the first position, a first space, which is capable of holding the first liquid, continues to be formed between the first optical member and at least one of the first movable member, the substrate, which is held by the first movable member, and the first liquid holding member.

WO 2008/081994 A3

INTERNATIONAL SEARCH REPORT

International application No
PCT/JP2007/075410

A. CLASSIFICATION OF SUBJECT MATTER
INV. G03F7/20

According to International Patent Classification (IPC) or to both national classification and IPC

B. FIELDS SEARCHED

Minimum documentation searched (classification system followed by classification symbols)
G03F H01L

Documentation searched other than minimum documentation to the extent that such documents are included in the fields searched

Electronic data base consulted during the international search (name of data base and, where practical, search terms used)
EPO-Internal

C. DOCUMENTS CONSIDERED TO **BE RELEVANT**

Category *	Citation of document, with indication, where appropriate, of the relevant passages	Relevant to claim No.
X	EP 1 717 845 A (NIPPON KOGAKU KK [JP]) 2 November 2006 (2006-11-02) cited in the application	27
A	paragraphs [0062] - [0091]; figures 1,4	1-26, 28-33
A	US 2004/211920 A1 (MARIA DERKSEN ANTONIUS THEODOR [NL] ET AL DERKSEN ANTONIUS THEODORUS A) 28 October 2004 (2004-10-28) cited in the application	1-33
	paragraphs [0065] - [0077]; figures 4-6	

☐ Further documents are listed in the continuation of Box C.

☒ See patent family annex.

* Special categories of cited documents :

"A" document defining the general state of the art which is not considered to be of particular relevance

"E" earlier document but published on or after the international filing date

"L" document which may throw doubts on priority claim(s) or which is cited to establish the publication date of another citation or other special reason (as specified)

"O" document referring to an oral disclosure, use, exhibition or other means

"P" document published prior to the international filing date but later than the priority date claimed

"T" later document published after the international filing date or priority date and not in conflict with the application but cited to understand the principle or theory underlying the invention

"X" document of particular relevance; the claimed invention cannot be considered novel or cannot be considered to involve an inventive step when the document is tak'en alone

"Y" document of particular relevance; the claimed invention cannot be considered to involve an inventive step when the document is combined with one or more other such documents, such combination being obvious to a person skilled in the art.

"&" document member of the same patent family

Date of the actual completion of the international search	Date of mailing of the international search report
12 June 2008	11/07/2008

Name and mailing address of the ISA/	Authorized officer
European Patent Office, P.B. 5818 Patentlaan 2 NL - 2280 HV Rijswijk Tel. (+31-70) 340-2040, Tx. 31 651 epo nl, Fax: (+31-70) 340-3016	Weckesser, Jens

INTERNATIONAL SEARCH REPORT

Information on patent family members

International application No
PCT/JP2007/075410

Patent document cited in search report	Publication date	Patent family member(s)	Publication date
EP 1717845	A	NONE	
US 2004211920	A1	NONE	