May 5, 1953 M. G. CLAY 2,637,322

APPARATUS FOR PRODUCING HEALTHFUL SLEEP

Filed Nov. 8, 1949

Fig. 1

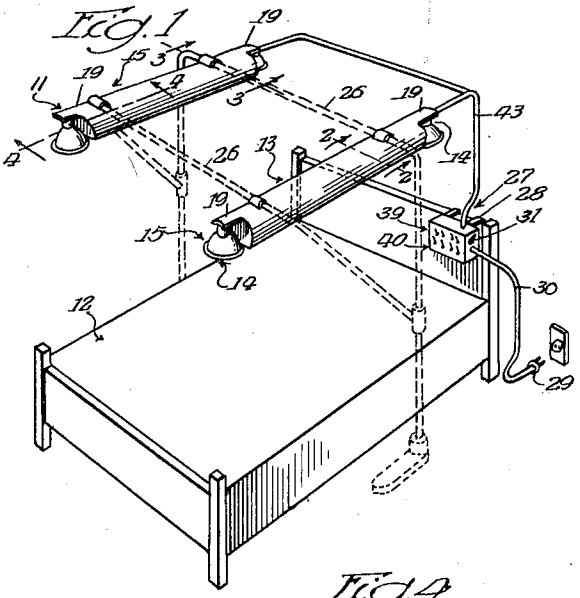

Fig. 2

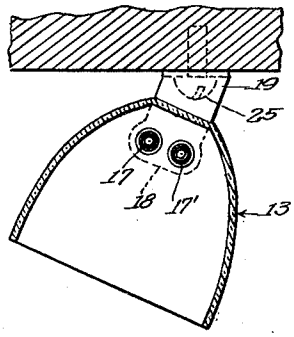

Fig. 3

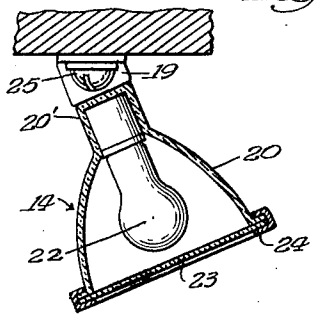

Fig. 4

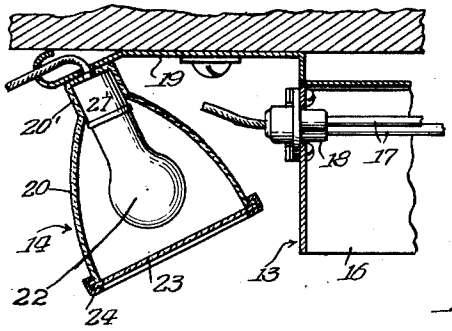

Fig. 5

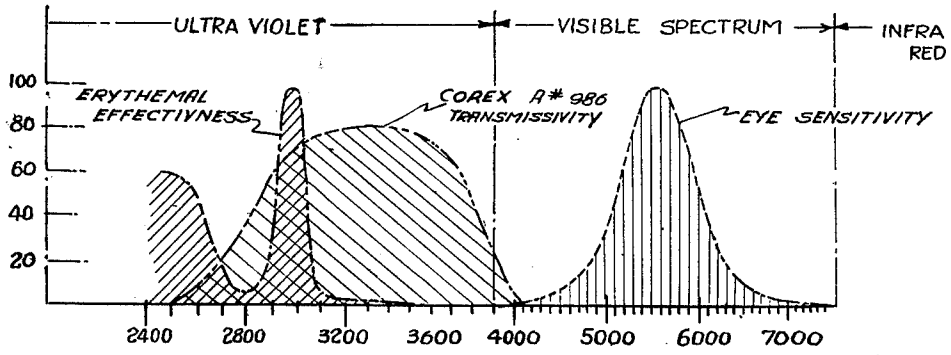

Inventor

Murray G. Clay

By: Fred Gerlach

Atty.

Patented May 5, 1953

2,637,322

UNITED STATES PATENT OFFICE

2,637,322

APPARATUS FOR PRODUCING HEALTHFUL SLEEP

Murray G. Clay, Chicago, Ill.

Application November 8, 1949, Serial No. 126,229

1 Claim. (Cl. 128—396)

1

The present invention relates in general to the promotion of health by exposing a treatment subject to conditions tending to produce physical comfort, relaxation, and other health and sleep inducing factors, including substantially all health and comfort promoting radiations normally produced by the rays of natural sunlight, excluding the visible components thereof; the present application being a continuation in part of application Serial No. 686,385, filed July 26, 1946, now abandoned.

An important object of the present invention is to promote health by inducing sleep and rest in position exposed to rays substantially duplicating the beneficial rays of natural sunlight, but excluding substantially all visible, sleep-arresting light components; a further object being to provide means for generating and applying such rays for sleep and health inducing purposes, as to a would-be sleeper reclining, or otherwise disposed in sleeping position, on a suitable support, such as a bed.

A further important object is to provide apparatus adapted for use in conjunction with a bed, or other support, whereby to produce substantially invisible infrared radiation of wave length within the range from 7600 to 50,000 Angstroms, in quantity or intensity sufficient to balance normal heat loss from a human body at rest, to thereby render unnecessary the use of blankets or other covering; a further object being to provide for the application, to such human body in sleeping position, of substantially invisible ultraviolet radiation having components of wave length not greater than, say, 4200 Angstroms, the lower wave length limit of visible light, but including components within the range from 2800 to 3200 Angstroms, at an intensity sufficient to produce vitamin D synthesization and erythemal tanning in human skin, whereby a human body subjected to such radiation will receive a beneficial and therapeutic "sun tan" process at a rate sufficiently moderated to avoid "sunburn."

Another important object is to provide sleep inducing radiation, comprising substantially invisible infrared and ultraviolet rays delivered simultaneously in a sleep inducing zone, at a regulated rate, to maintain a would-be sleeper at a comfortable sleeping temperature, while simultaneously applying the therapeutic effects of safe and comfortable skin tanning; a further object, to this end, being to provide infrared and ultraviolet ray generators in conjunction with means for mounting the same in position to

2

apply rays therefrom simultaneously to a person in sleeping position on a suitable support, suitable filtering means being provided for regulating the intensity of the rays, and for substantially eliminating visible light rays between, say, 4200 and 7600 Angstroms, to thereby promote restful sleeping conditions, the filtering means being further designed to eliminate substantially all ultraviolet radiation of wave lengths shorter than, say, 2500–2800 Angstroms.

Another important object is to promote health and sleep by simultaneously exposing the body of a person, in sleeping position, to infrared rays of wave length above the visible spectrum and to ultraviolet rays of wave length below the visible spectrum, and including rays of wave length in the "sun tan" or erythemal range from 2800 to 3200 Angstroms.

Another important object is to provide apparatus of the character mentioned, which may be conveniently mounted and associated with a bed, or other support of conventional or standard structure, thereby minimizing the expense of providing for restful sleep and health promotion, in accordance with the present invention.

The foregoing and numerous other important objects, advantages, and inherent functions of the invention will become apparent as the same is more fully understood from the following description, which, taken in connection with the accompanying drawings, discloses a preferred embodiment of the invention.

Referring to the drawings:

Fig. 1 is a perspective view of an apparatus for practicing the present invention, as mounted in operating position in association with a conventional bed;

Figs. 2 3, and 4 are sectional views taken substantially along the lines **2—2**, **3—3**, and **4—4**, respectively, in Fig. 2; and

Fig. 5 is a graphical representation of light wave lengths.

As indicated in Fig. 5, the visible light spectrum comprises rays of wave length between about 4000 and 7600 Angstroms. The eye sensitivity curve indicates that the human eye is not materially sensitive to rays of wave length above 6300 and below 4200 Angstroms. The curve of erythemal effectiveness, in Fig. 5, shows a beneficial "sun tan" zone in the wave length range between 2800 and 3200 Angstroms.

It is the object of the present invention to provide for irradiating a person for sleep and health inducing purposes simultaneously with infrared rays, to promote bodily warmth and consequent

sleep promoting relaxation and comfort, and with ultraviolet rays, including rays having wave length in the beneficial erythemal or "sun tan" zone in the wave length range between 2800 and 3200 Angstroms, to accomplish vitamin D synthesis and other healthful benefits, while excluding such visible light, in the wave length spectrum between, say, 4200 and 6800 Angstroms, as may tend to impair or prevent sleep.

To illustrate the invention, the drawings show sleep promoting apparatus comprising ray generating equipment 11, supported in position to direct sleep inducing and therapeutic radiations upon a cooperating structure 12 of a character adapted to support a human body in sleeping position, within the field of sleep and health promoting rays emitted by the apparatus 11 when in operation. The structure 12 may comprise any suitable, convenient or preferred means for supporting a body, preferably in reclining position; and, as shown in the drawings, the structure 12 may conveniently comprise a conventional sleeping bed, an important feature of the invention residing in the fact that expensive special purpose bed structures need not be provided, but the sleep inducing and therapeutic apparatus may be employed in conjunction with any suitable body supporting device, such as may comprise the usual furniture provided in a sleeping room or dormitory.

The equipment 11 preferably comprises a plurality of infrared ray generators 13 and a plurality of ultraviolet ray generators 14, the illustrated embodiment comprising a pair of generators 13 and four generators 14, although any suitable, preferred or convenient number of both generator types may be employed. The generators are preferably assembled in units 15, each comprising a suitable elongated support structure carrying an ultraviolet ray generator 14 at each of the opposite ends of the elongated support structure, and one or more infrared ray generating units supported on the structure in position intermediate the opposite ends thereof.

Suitable means may be provided for mounting one or more of the units 15 in position above the bed 12 to direct infrared and ultraviolet rays from the ray generators upon the bed, to thereby expose a body, in sleeping position on the bed, to said rays. To this end, the elongated support structure comprising a generator unit 15 may conveniently comprise an elongated, preferably trough shaped reflector 16, which may be made of material, such as polished sheet aluminum or chrome plated sheet metal, suitable for reflecting infrared rays, the sheet forming the reflector 16 being formed to provide substantially parabolic sectional configuration in the trough shaped reflector, in order to eject infrared rays therefrom, in the direction of the open side of the reflector. One or more preferably elongated rod-like infrared ray generators 17, 17', of the electrically energized type, are supported in the trough-like reflector 16, preferably in side by side parallel relationship, and substantially at the focus of the parabolic reflector 16. These generators 17, 17' may conveniently comprise resistance heaters of the "Calrod" type. Such heater units may be operated to emit infrared rays of wave length above 6600 Angstroms, whereby infrared rays containing substantially no visible light components may be produced. Where a plurality of such heaters are used together in a common reflector, they may have different heating capacities, for the selective production of infrared ray heat at various intensities. For example, one element may be designed to operate at, say, 150 watts and the other at, say, 250 watts, whereby to provide heat at 150, 250, or 400 watts by operating the elements separately or simultaneously. The rod-like generator elements 17, 17' are preferably supported, at their opposite ends, in suitable mounting clips 18 mounted on the reflector element 16 adjacent the opposite ends thereof.

The opposite ends of the reflector element 16 may be provided with extensions 19, on which the ultraviolet ray generators 14 may be supported.

The ultraviolet ray generators 14 preferably each comprise a parabolic reflector 20 of circular sectional shape, the base of the reflector 20 comprising an extension 20', in which is mounted a lamp socket 21 for detachably receiving a lamp 22 adapted to be electrically excited for the generation of ultraviolet rays, the socket 21 being positioned to support the lamp 22 with its ray generating element substantially at or near the focus of the parabolic reflector 20. The reflectors 20 may be secured in any suitable or convenient fashion, as by means of fastening elements, or by welding or brazing the same to the end extensions 19 of the elongated reflector 16.

While any suitable ultraviolet ray generator may be employed, the lamp 22 may conveniently comprise a sun tan lamp such as type S-1 lamp manufactured by General Electric Company.

A filter 23, comprising a plate or disk of material adapted to transmit ultraviolet rays of wave length between, say, 2500 and 4200 Angstroms, including erythemal rays of wave length in the range of 2800 to 3200 Angstroms, and to exclude substantially all other rays produced by the generator 22, above 4200 Angstroms and below 2500 Angstroms, including substantially all visible light, is preferably mounted in the open end of each reflector 20, as by detachable clamping collar means 24.

A suitable filter for this purpose may comprise the "Corex A No. 986" glass filter material made by Corning Glass Company. This material, as shown in Fig. 5, excludes rays of wave length above 4200 Angstroms and below 2500 Angstroms, and transmits rays of intermediate wave length, including beneficial "sun tan" rays in the erythemal wave length zone between 2800 and 3200 Angstroms.

The unit or units 15 may be mounted in operative position in any suitable or preferred fashion, as by fastening the reflector 16 on suitable support means adapted to carry the unit in operative position above the bed structure 12. To this end, a unit 15 may be secured directly on the ceiling of a sleeping room, as by means of screws 25, or other fastening devices, engaging the extensions 19 to anchor the unit in place. Alternately, the unit or units 15 may be mounted on pedestal or bracket means, including transverse support members 26, on which the unit or units are adjustably mounted for movement in a direction transversely of the bed structure, to thereby alter, at will, the position of a unit or the spacement between units. The transverse support members 26, in turn, may be secured to a room ceiling, or may form parts of a mounting structure, such as may comprise spaced apart dependent legs, fitted with rollers and adapted to be moved into position straddling the bed structure and supporting the units in operative position above the bed.

One or more units 15 may thus be employed for therapeutic and sleep inducing purposes, although it is preferable to employ a pair of units 15 in substantially parallel, spaced apart rela-

tionship, with the units disposed vertically above, and parallel with respect to, the opposite side edges of the bed, the units being tilted to substantially center the ray beams emanating therefrom upon the medial portions of the bed structure, as shown more particularly in Fig. 3 of the drawings.

In order to energize and control the operation of the ray generators **13** and **14**, a control box **27** may be provided, said control box having manually operable switch means for controlling the delivery of electrical energizing power to the generators. The control box **27**, also, may be formed as a convenient unit adapted for attachment, in readily removable fashion, as on the headboard of the bed structure, or other convenient mounting place readily accessible to a person reclining in sleeping position upon the support structure **12**. Electrical energy for actuating the ray generators may be derived from any suitable source of electrical power, such as the usual house wiring system, as by means of a plug-in device **29** adapted for electrical connection in the house wiring system, as at an outlet socket thereof. The plug-in device **29** may be connected with the control box **27**, as by means of suitable cable conductors **30**. At the control box the conductors **30** may be provided with a manually operable master control switch **31**, connected with the ultraviolet ray generators **14**, through suitable transformer means, and a cable **43**, delivery of power to the generators **14** being under the control of suitable switches **39** to selectively control operation of the ultraviolet lamp means. Likewise, any one or more of the infrared ray generators **14** may be electrically energized from the power source, through the cables **30** and **43** under the control of suitable switches **40**.

In order to use the device, all switches **31**, **39** and **40** are turned on for a few minutes to allow the ray generators to become heated to normal operating temperature. The windows of the sleeping room are adjusted in accordance with outside temperature, in order to provide desired air circulation. The user may then assume a sleeping position upon the support structure or bed **12**, with a minimum or total absence of bed covering. The switches **40** may then be adjusted to produce a comfortable sleeping temperature induced through the operation of the selected infrared ray generators, and one or more of the switches **39** may be left on, in accordance with the user's individual response to ultraviolet or tanning rays. Heat radiation from the body will be balanced by the infrared ray heat, thus permitting restful sleep at optimum body temperature for comfort, with minimum heart exertion. Vitamin D synthesization, and other beneficial effects associated with outdoor sunshine, will be derived by the user, who will acquire a healthy sun tan color while sleeping. The master control switch **31** allows for disabling the entire equipment when operation thereof is not required, without, however, disturbing the adjusted position of the other control switches.

It is thought that the invention and its numerous attendant advantages will be fully understood from the foregoing description, and it is obvious that numerous changes may be made in the form, construction and arrangement of the several parts without departing from the spirit or scope of the invention, or sacrificing any of its attendant advantages, the form herein disclosed being a preferred embodiment for the purpose of illustrating the invention.

The invention is hereby claimed as follows:

Apparatus for promoting health-sleep comprising ray generating means embodying a support frame, a pair of spaced lamps comprising sources of visible light and invisible ultraviolet radiation mounted on said frame in position to project rays from said lamps within a treatment zone spaced from said frame, a light filtering member disposed in the path of rays projected from said lamps to exclude from said zone substantially all rays emitted from said lamps and having wave lengths either greater than 4200 Angstroms or less than 2800 Angstroms, to thereby apply in said zone substantially invisible rays including rays within the wave length zone from 2800 to 3200 Angstroms, infrared ray generating means mounted on said frame between said lamps for generating infrared rays and projecting the same within said treatment zone, an electrical power supply circuit, connected with said generating means to energize the same, and adjustable means connected in said circuit to control the power supplied to said generating means and thus regulate the intensity of said infrared rays to compensate for the normal heat loss from the body of a treatment subject disposed in said zone, whereby the treatment subject in said zone may be exposed to infrared and ultraviolet ray treatment substantially in sleep-promoting darkness.

MURRAY G. CLAY.

References Cited in the file of this patent

UNITED STATES PATENTS

Number	Name	Date
2,072,205	Halpern	Mar. 2, 1937

OTHER REFERENCES

Catalog of the Corning Glass Works, "Glass Color Filters," May 1935, page 11.

Electrotherapy and Light Therapy, a book by Richard Kovacs, published in 1935 by Lea and Febiger of Philadelphia, Pa., pages 462, 464, and 465.

Journal of the American Medical Association for October 19, 1946, page 384.