Oct. 14, 1958 H. N. VELEY 2,855,630

MANUFACTURE OF MOLDED-IN SHUNT ELECTRICAL CONTACT MEMBERS

Original Filed Nov. 25, 1950 2 Sheets-Sheet 1

FIG. 1

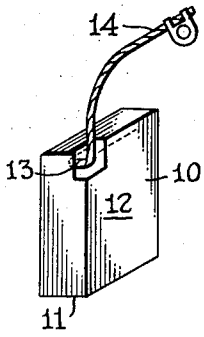

FIG. 2

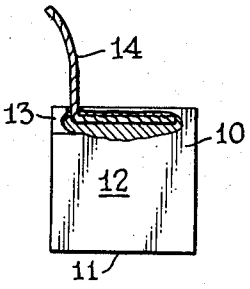

FIG. 3

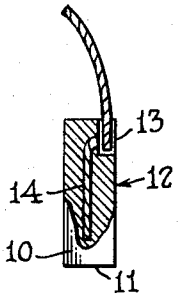

FIG. 4

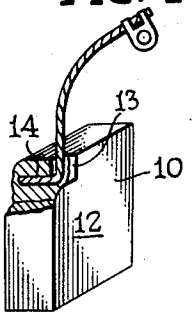

FIG. 5

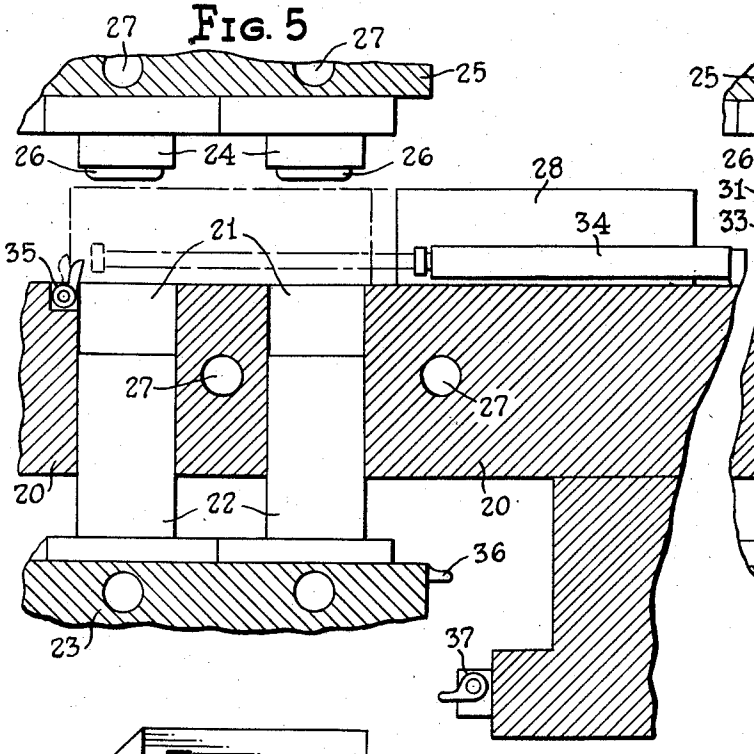

FIG. 6

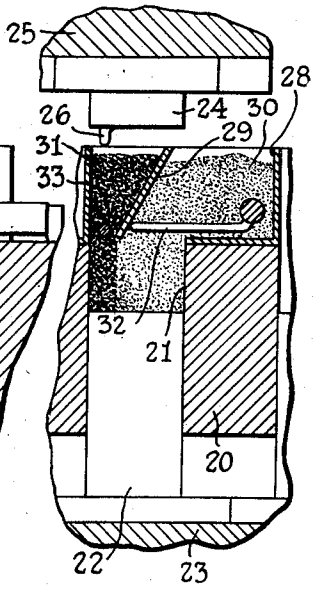

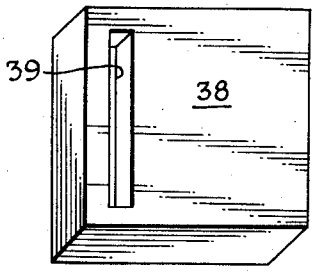

FIG. 7

INVENTOR
HUGH N. VELEY

BY Roy F. Stewart

ATTORNEY

Oct. 14, 1958 H. N. VELEY 2,855,630

MANUFACTURE OF MOLDED-IN SHUNT ELECTRICAL CONTACT MEMBERS

Original Filed Nov. 25, 1950 2 Sheets-Sheet 2

FIG. 9

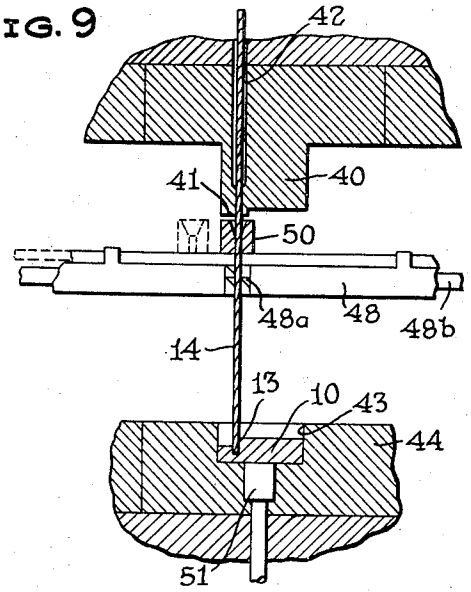

FIG. 10

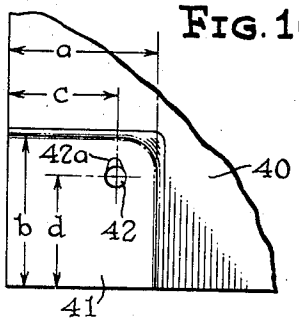

FIG. 8

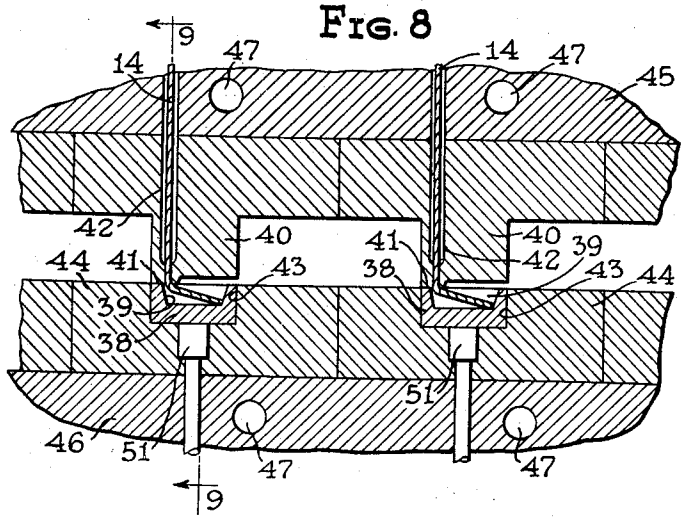

INVENTOR
HUGH N. VELEY

BY Roy F. Stewart
his ATTORNEY

United States Patent Office 2,855,630 Patented Oct. 14, 1958

2,855,630

MANUFACTURE OF MOLDED-IN SHUNT ELECTRICAL CONTACT MEMBERS

Hugh N. Veley, St. Marys, Pa., assignor, by mesne assignments, to Speer Carbon Company, a corporation of New York

Original application November 25, 1950, Serial No. 197,581, now Patent No. 2,654,038. Divided and this application July 2, 1953, Serial No. 365,625

5 Claims. (Cl. 18—59)

This invention relates to manufacture of molded-in shunt electrical contact members; and it relates more particularly to methods of making electrical contact members, especially electrical brushes, molded from finely divided electrically conductive material, especially carbonaceous material such as graphite, with which may optionally be admixed powdered copper or other metal, the whole bonded together with a suitable binder; the brush being provided with a conductive lead or shunt, most desirably of the flexible stranded wire or pigtail type, terminally embedded and anchored in the brush material by the molding operation.

This application is a division of a prior copending application Serial No. 197,581, filed November 25, 1950, now matured into Patent No. 2,654,038.

Provision of a bonded carbon brush with a conductive lead substantially integral therewith by embedment of an end portion in the brush material as the brush is being molded has long been recognized in the art as something greatly to be desired. In spite of this fact, comparatively little progress has thus far been made toward practical achievement of this objective, especially as regards brushes of the type used for automotive purposes. As a rule, molded-in shunt brushes heretofore available have proved more or less unsatisfactory in respect of either mechanical strength or electrical performance, or both. In the case of graphite and metal-graphite brushes especially, this was due in considerable part to the necessity, practically unavoidable because of the structural characteristics of the brush and pigtail combination proposed, of so applying the molding pressure to the raw mix in the mold when producing such brushes that the working or contact face of the completed brush was parallel to the direction of the grain of the molded brush material, instead of being perpendicular thereto as required by the best practice. Heretofore, in brushes of this type the shunt cable has been molded into the top edge of the brush so that it could be readily connected in an electric circuit. This necessarily makes it difficult to mold the brush on its side because in so doing the cable lies perpendicular to the direction in which the molding pressure is applied, thus causing it to be damaged or even completely sheared off during the molding operation. On the other hand, if the brush is molded with the pressure exerted perpendicular to the edge so that the shunt will not be damaged, the electrical conductivity of the brush is greatly reduced due to the improper layering or graining effect of the molded material. Heretofore, therefore, contact members having molded-in shunts have suffered from poor mechanical strength of the shunt or from inferior electrical conductivity.

The method of the present invention greatly facilitates manufacture of molded-in shunt electrical contact members of the character disclosed in the hereinabove identified copending application, thus rendering it commercially practicable to realize the important advantages characterizing such electrical contact members, especially when they are in the form of electrical brushes.

Thus, in manufacturing a molded-in shunt brush in accordance with the present method, the brush is molded with the shunt in place while applying the molding pressure parallel to the contact face in proper direction to give the correct grain or layering relation thereto; the resultant contact member being characterized by good electrical performance and excellent mechanical strength. In general, assuming the novel contact member to have a contact or working face and an adjoining relatively large flat non-working face substantially perpendicular thereto, said relatively large face is provided in the molding operation with a depression or recess, which extends to and is laterally open at an edge of the contact member at a location appropriately remote from said working face. The flexible lead or pigtail, a terminal portion of which has been embedded in the brush material adjacent the recess under molding pressure applied perpendicularly to said relatively large face, is so positioned and the molding is so performed that the free portion of the flexible lead emerges from the bottom of said recess. By terminal portion of the pigtail is meant that portion which is embedded in the brush material. Although an end of the lead is ordinarily molded into the brush, the expression "terminal portion" refers to an electrical terminal and may be, for example, the mid-section of a length of cable. The depth of the recess is sufficient to accommodate the lead such that when normally bent sharply over at the point of emergence, it will lie close to the bottom of said recess and extend laterally out beyond the edge of the contact member for connection in a circuit.

Particularly satisfactory results have been obtained where that portion of the brush adjacent the pigtail includes a substantial proportion of copper powder and a binder molded integrally with the brush during the molding process. Still better electrical performance as well as good mechanical strength of the brush connection have been attained by using only copper powder and a binder in that part of the brush into which the flexible lead is molded.

In practicing the novel method, a preform is produced having a depression or trough provided in the flat side against which the molding pressure is applied. One end of the shunt cable is then placed in this depression and the molding pressure applied perpendicularly to the flat side of the brush. During this final molding operation the brush material is forced into the space around the cable, integrally uniting the end of the cable with the brush and thereby forming a strong connection.

In explaining further the nature of the contact members and the apparatus for practicing the new method, reference will be made to the accompanying drawings which illustrate, by way of concrete example, certain desirable practical embodiments thereof. In these drawings—

Fig. 1 is a perspective view of a novel brush showing the molded-in shunt emerging from the side thereof but extending laterally out beyond the edge of the brush;

Fig. 2 is a side elevation of the same partially broken away;

Fig. 3 is a view also partially broken away looking at the top edge of the brush shown in Figs. 1 and 2;

Fig. 4 is a perspective view of a novel brush, similar to that illustrated in Figs. 1 and 3, but showing a slightly different form of shunt connection;

Fig. 5 is a schematic view of a section in elevation of a portion of the preform press;

Fig. 6 is a schematic view showing how the preform mold is filled;

Fig. 7 is a perspective view on an enlarged scale of a preform;

Fig. 8 is a schematic view of a section in elevation of

parts of the molding press shown just as the molding pressure is about to be applied to the preforms;

Fig. 9 is a section of a portion of the molding press viewed in the direction 9—9 as seen in Fig. 8, but showing the press in its open position just after a set of brushes have been molded; and

Fig. 10 shows a detail on an enlarged scale of a portion of a punch used in the final mold.

Referring to the drawings, carbon block 10 has a working or contact face 11 and a relatively large non-working face 12 in which there is a depression or recess 13 located most desirably in one corner opposite said contact face. A stranded copper wire cable or flexible pigtail lead 14 is substantially integral with the carbon block and emerges from the bottom of recess 13. The depth of the recess is equal to or slightly greater than the diameter of the cable 14 so that when the pigtail is bent over sharply at the point of emergence it will lie flush with the surface of the brush. This will permit the lead to extend laterally out beyond the edge of the contact member for connection in a circuit without interfering with the brush holder.

It will be noted that this construction readily permits manufacture of the brush by applying the molding pressure perpendicular to surface 12 while at the same time providing a practical method of molding-in the shunt 14. When the molding pressure is so applied, the grain of the molded brush material is perpendicular to working face 11, as required by best practice. Since it is neither feasible nor practical to embed the end of the shunt from the top of the brush when the molding pressure is applied to a side, the cable is inserted in the same direction in which the molding pressure is applied. Recess 13 is formed in the top edge of the brush at the same time that the block is molded and while shunt 14 becomes embedded in the material.

Fig. 2 clearly shows the wire cable 14 molded-in across the top of the brush, and Fig. 3 better illustrates how the shunt will lie flush with the flat surface 12 when it is bent over at the point of emergence. While molding the cable across the top provides a stronger shunt connection and improved electrical performance, and is for these reasons believed to be the most desirable form of connection, it is to be understood that the connection shown in Fig. 4, in which the shunt does not extend across the top of the brush but is embedded only in the corner adjacent recess 13, is obviously also within the scope of the invention. In cases where some economy is required, the form of connection shown in Fig. 4 may be useful. Furthermore, improved characteristics over brushes with a single shunt connected as in Fig. 4 can be attained by providing two or more shunts for each brush.

The mix, from which the brush is molded, may be any of various materials suitable for molded brushes. Carbonaceous materials usually employed are natural graphite and electro-graphite flours, but any of various other materials used in carbon brushes such as cokes, metal-graphite, lamp-black and carbon black may also be used. The binder is most desirably a thermosetting resin commonly used in molded brushes such as phenol-formaldehyde, urea-formaldehyde, phenol-furfural, melamine, silicone or any combination of these. Nylon may also be used as a binder. In addition to the carbonaceous material and binders, copper or other metal powders are sometimes included in the mix.

While the brush body is ordinarily of a uniform composition throughout, for certain purposes the material in that portion of the brush in which a copper wire shunt is embedded is composed wholly of a resin-bonded copper powder. Brushes of this type, hereinafter referred to as metal-top brushes, have a very low voltage drop between the shunt and the brush body as compared with brushes having the shunt molded directly into the graphite-resin material. This is because the contact area of copper to graphite in the metal-top brush is much greater than in all-graphite brushes, and because of the low resistance contact between the copper powder and the wire shunt.

By way of concrete illustrative example, a particularly desirable graphite or "black" mix consists of an electro-graphite flour powdered to a fineness such that 90% will pass 200-mesh. Fourteen pounds of phenol-formaldehyde binder are added for each 100 pounds of graphite flour. Another common mix consists of natural graphite having a fineness such that 98% will pass 200-mesh and bonded with phenol-formaldehyde resin in the proportion of one part binder to five parts graphite. The exact proportions or ingredients in any case, however, depend on the particular purpose for which the brush is to be used, the foregoing examples being merely illustrative.

For metal-top brushes, a suitable metal powder mix consists of a fine electrolytic copper powder plus a binder, which may be any of the aforementioned resins such as phenol-formaldehyde. The proportion of binder to metal powder is most desirably kept within the range of 8 to 14 parts binder to 100 parts metal powder. Although copper powder has been found to be very satisfactory, it is to be understood that in its broader aspects the invention does not exclude use of other powdered metals such as aluminum. Furthermore, the molding compounds may be mixtures of metal powders with the carbon flours, as for instance metal-graphite mixes. These are sometimes used in what is known as sandwich brushes comprising layers of different materials, a typical sandwich brush being one having two outside layers of graphite mix and a center layer of metal-graphite. For some particular purpose, brushes of this type show improved characteristics over all-graphite brushes.

Apparatus for commercially manufacturing the new brush in accordance with the novel process is illustrated more or less diagrammatically in Figs. 5, 6, 8, 9 and 10 wherein, for the purposes of simplification and clarity, only so much of the pressing units is shown as is necessary to an understanding of their operation. Therefore, although the presses illustrated in Figs. 5 and 8 show two cavities in each die, while in Figs. 6 and 9 only one cavity is shown, it is obvious that these dies may be of such size as to have, for instance, six rows of cavities with nine cavities in each row, so that 54 brushes can be manufactured simultaneously.

The preform press herein described and illustrated is adapted for production of metal-top brushes having the shunt molded-in across the top. However, this apparatus is readily modified for production of solid or sandwich type brushes, or for brushes wherein the shunt is not molded-in across the top.

In the specific embodiment of the perform press shown in Figs. 5 and 6, the press, which may be operated hydraulically, consists of a stationary die 20 provided with substantially rectangularly shaped cavities 21, in which the bottom plungers or punches 22, mounted securely on the lower movable platen 23, move vertically between the upper and lower surfaces of die 20. Top punches 24, mounted on the upper movable platen 25, are capable of being lowered into cavities 21 and have projections 26 on their under faces provided to form a groove or hole in each preform, into which a pigtail is inserted during the final molding operation. The mold and both top and bottom punches are heated in some manner such as by the circulation of hot oil or steam through passages 27 or by electrical heating elements.

A hopper 28 carrying the raw mix is mounted on one side of the press and is capable of being moved horizontally on the upper surface of die 20 into position for depositing the molding compound in the mold. As viewed in Fig. 5 the hopper moves horizontally in the plane of the paper, while in Fig. 6, it will move in a line perpendicular to the paper. Furthermore, in Fig. 5 the hopper is shown withdrawn from the mold to allow

unobstructed vertical movement of the top punch. Fig. 6, on the other hand, shows the hopper in the process of filling the mold. Since the apparatus here illustrated is adapted to produce metal-top brushes, each section of the hopper is divided into two bins for each row of cavities in the mold by a partition **29** whose lower edge lies parallel to the line of movement of the hopper. The graphite-resin mix **30**, which makes up the major portion of the brush body, is contained in one bin and the copper-resin mix **31** in the other.

In order to ensure unform filling of the mold, each section of the hopper is provided with a stirring device near the bottom of the pin to agitate the molding compound as it flows into the mold. A reciprocating stirrer **32** in the bin containing the graphite mix **30** moves in a horizontal plane along each row of cavities, while a rotating stirrer **33** agitates the powder in the copper-mix section, both devices maintaining a constant flow of mix as the cavities are being filled. The hopper is moved into and out of filling position by a hydraulic ram **34**.

With top punches **24** raised to their highest position and bottom punches **22** raised even with the upper surface of die **20**, hopper **28** is moved by hydraulic ram **34**, upon actuation of a starting switch in the circuit of a motor (not shown) which controls the ram, to the filling position shown in broken lines in Fig. 5. Upon reaching this position, it contacts and operates a switch **35** to actuate another motor (not shown), thereby starting agitation by stirrers **32** and **33**. Operation of switch **35** also actuates the press power mechanism causing bottom punches **22** to be lowered at a rate so controlled as to further ensure good filling of the mold. When punches **22** reach their lowest position, a lug **36** on the lower platen **23** contacts a second switch **37** in the circuit of the hydraulic ram motor, which causes hopper **28** to start to move off the mold thereby releasing switch **35** and stopping the motion of the stirrers as well as the downward movement of plungers **22**. The hopper then returns to the position shown in full lines where it will be out of the way when the top punches are lowered into the cavities.

Top punches **24** are then automatically dropped rapidly by the press power mechanism until they are about to enter die **20**, at which point their downward movement is decreased to allow slow entry into the cavities in order to permit air contained in the powder mix to be dispelled as pressure is applied by upward movement of bottom punches **22**. A pressure of from ½ to 2 tons per square inch at between 30°–80° C. is applied to compact the preforms only sufficiently to hold them together when they are ejected from the preform mold. Care must be taken at this stage because if the preforms are too hard after this preliminary molding operation they will not flow properly in the final mold. On the other hand, if they are not hard enough they will fall apart during transfer to the molding press.

When the desired pressure is attained in the preform press, the top punches are raised quickly from the die to their highest position. A preform carrier or rack (not shown) for removing the preforms from the preform press is then placed on the die. This rack, which looks more or less like an egg crate, has a multiplicity of compartments arranged to correspond exactly with the cavities in the die of the press. Suitable guides are provided to properly position the carrier on the die so that when the preforms are ejected they fit snugly into the compartments of the carrier and are firmly held therein. All the preforms made in one pressing operation may then be simultaneously removed from the press in the carrier. Ejection of the preforms into the carrier is accomplished by raising the bottom punches flush with the top of die. This completes the operating cycle of the preform press, which is then ready to start on the next set of preforms as soon as the preform carrier is removed. Where only a small number of brushes are made at one time, the preform carrier is unnecessary; but for large production presses, this aid is highly desirable as a time-saver. Preparatory to the final molding operation, the preforms are dusted with a lubricant, such as zinc stearate or a finely pulverized vegetable wax.

In the production of brushes having the pigtail molded-in across the top, the preform **38** illustrated in Fig. 7 is formed with a groove or trough **39** located in the portion of the preform into which the shunt is to be placed. The depth of trough **39**, formed by projection **26** on the face of the top punch **24**, is equal to about half the thickness of the preform in order to locate the shunt centrally within the brush when molded.

Figs. 8 and 9 illustrates the essential parts of the final molding press as well as how the cables become molded in the brushes during the molding thereof. Top punches **40** have raised portions **41** on their lower or working faces for forming recess **13** in the molded brush body **10**. Wire cables **14** are fed through passages **42** drilled vertically through punches **40** and through the raised portions **41** thereon. Cavities **43** in die **44** are so spaced thereon as to correspond exactly with the positions of the cavities in die **20** of the preform mold in order that the preforms may be ejected into the preform carrier, which in turn is capable of depositing the preforms in die **44** of the final mold. The ends of the cables, which protrude from the holes in punches **40**, are bent over, by means hereinafter described, so that they will lie properly in grooves **39** of the preforms. This is clearly illustrated in Fig. 8 showing top punches **40** and die **44** just before the molding pressure is applied. Punches **40**, being rigidly secured to the stationary platen **45**, do not move, while die **44** is mounted on a platen **46** which is capable of moving vertically in order to open and close the mold as well as to exert the molding pressure. Although this arrangement has been found to be most practical, it is obvious that, with certain minor adaptations, the lower platen and die could be stationary and the upper platen movable; or both could be adapted for movement if desired. The mold as a whole including punches and die is heated by some means **47** in the same manner as the preform press.

With reference to Fig. 8, upward movement of die **44** will cause punches **40** to enter cavities **43** and to compress the preforms **38** therein, causing the walls of the trough **39** in each preform to be crushed, and forcing the material of which the brush is molded into the space around the cable **14**. As pressure and heat are applied, the material surrounding the cable **14** becomes solidly molded around the shunt cable securely embedding it in the molded body of the brush.

In order to avoid any possibility of shearing the wire strands in the shunt cable during the molding operation, the portion **42***a* of the edge of hole **42** (Fig. 10) over which the cable is bent for insertion in the preform is rounded off to eliminate the sharp edge of the punch that would otherwise tend to cut or fray the cable. Furthermore, it is desirable to locate shunt hole **42** as far away from the edge of the brush as possible in order to obtain maximum shunt pull-out strength but, at the same time, not too close to the edges of portion **41** where the shunt would be damaged during molding. Fig. 10 shows a satisfactory form of punch **40** wherein *a* and *b* indicate the dimensions of the raised portion **41** and *c* and *d* locate the hole **42**. In a typical instance for a brush measuring approximately one inch square on its flat side, $a=\frac{1}{4}$ inch, $b=\frac{5}{16}$ inch, $c=\frac{5}{32}$ inch and $d=\frac{3}{16}$ inch.

During molding of the preform into the final product, flow of the molding compound toward depression **39** is greatest in the section of the preform under raised portion **41** of the punch. Accordingly, in order to permit smooth flow, thereby tending to eliminate cracking or laminating of the material, the inside edges of raised portion **41** are rounded as shown in Fig. 10. It has been found that unless these edges are rounded, the thin edges of material

around recess 13 in the molded brush are apt to be weak and to break easily.

After the brushes are cured in the mold for the required length of time at specified temperature and pressure, die 44 is lowered, drawing the shunt cables with it through punches 40 from a supply of cable in the upper part of the press (not shown). When the die has been lowered an amount equal to the overall length of the shunt (Fig. 9), a wire cutter 48, having reciprocating blades 48*a* and drive shaft 48*b*, clips the cables 14 at the desired distance from the brushes 10, which are still held in die 44. The required length of cable for insertion into the next set of preforms placed in the die is left protruding from each punch. Cutter bar 48 is mounted on suitable supports (not shown) and, as viewed in Fig. 9, moves perpendicularly to the plane of the paper and carries with it upright members or deflectors 50, which are mounted rearwardly thereof. After cutting off the shunt cables, cutter 48 is moved on past punches 40 so that the deflectors strike the free ends of cables 14 near the point where they emerge from the punches giving them a permanent bend at this point in order that they will lie properly in the grooves 39 of the next set of preforms as shown in Fig. 8. Members 50 are mounted for transverse movement on cutter 48 so that after they have bent cables 14, they are moved to the position indicated by broken lines in Fig. 9 in order that they will pass to one side of the cables when the cutter is returned to its original starting place. The deflectors are then returned to their full-line positions ready to make a second pass after the next set of brushes has been molded.

In practice it has been found desirable to maintain the final molding pressure at between 2 to 10 tons per square inch and generally at about 4 tons per square inch depending on what the brush being molded is to be used for. Using these pressures, the temperature may be between 140° to 200° C. and is most desirably about 160° C. The brushes are mold-cured in the press at the molding pressure and temperature for about 5 minutes. Then after the shunts have been cut, the brushes are ejected from the die by ejector pins 51 and are oven-cured at about 200° C. for substantially one hour. After oven-curing they are finished by grinding the commutator contact surfaces of each.

While not indispensable to satisfactory performance of the brushes under usual conditions, it has been found distinctly advantageous in certain instances to employ for the flexible conductor in the novel brush combination what is known as oxygen-free high-conductivity ("O. F. H. C.") copper cable, because it oxides less quickly than ordinary copper cable does under the same conditions and thus does not deteriorate to any great extent during the oven-curing of the brushes. Another highly desirable material for the shunt is nickel-coated copper wire. This does not oxidize under severe loads, and consequently the shunt connection does not increase in resistance even as much as the O. F. H. C. copper cable shunt under such conditions.

As previously mentioned the presses herein described can be readily adapted to production of sandwich type brushes and all-graphite brushes. In order to manufacture all-graphite brushes, the hopper for filling the preform mold can be loaded with graphite mix in all its bins, or else another hopper is used which is not divided into separate sections and is loaded with only the graphite or "black" mix. The preform is molded in the same manner as the metal-top brush, and transferred to the molding press exactly as hereinbefore described.

To produce sandwich brushes, on the other hand, two hoppers are provided with one on each side of the preform press so that they can be moved alternately into filling position over the die. One hopper contains the "black" mix and the other contains the metal-graphite mix. In order to make a three layer sandwich brush, a

layer of the graphite mix is first deposited in the mold and then a layer of metal mix is deposited by the second hopper, after which a third layer of the "black" mix is added to fill the mold. This is then compressed to the preform which is subsequently molded as hereinabove described. Since the shunt is molded into the middle layer or metal-graphite portion of this type of brush, the shunt millivolt drop of sandwich brushes having molded-in shunts is ordinarily lower than that of the all-graphite brush. A metal-graphite mix found to be satisfactory for the center layer is composed of 50% finely divided copper powder, 50% fine graphite flour and approximately 8 pounds of a thermosetting resin per hundred pounds of metal-graphite flour.

It has been found that one way of lowering the resistance of the shunt connection for all-graphite brushes is to deposit copper powder, preferably containing a resin binder, into the depression provided in the preform and to then insert the shunt into the depression, after which the brush is molded. While the addition of the copper powder alone will reduce the resistance of the connection, it has been found that a stronger connection can be made without increasing the shunt resistance by including a resin binder with the copper powder.

What is claimed is:

1. The method of manufacturing a molded electrical contact member composed of finely divided carbonaceous material and having a working face and an adjoining face substantially perpendicular thereto, which comprises; embedding a terminal portion of an electrical conductor in said contact member so that said conductor emerges perpendicular to said adjoining face, applying pressure during the molding operation perpendicular to said adjoining face, and forming a recess in said adjoining face extending from said electrical conductor to an edge of said contact member to permit said conductor to extend laterally out beyond the edge of said contact member when bent over at its point of emergence.

2. The method of manufacturing a molded electrical contact member having a working face and an adjoining face substantially perpendicular thereto, which comprises; placing a finely divided carbonaceous material containing a resin binder in a mold, inserting a terminal portion of an electrical conductor in said material so that said conductor will emerge perpendicular to the adjoining face of the molded contact member, applying molding pressure to said carbonaceous material in a direction parallel to the emerging portion of said conductor and perpendicular to said adjoining face of the contact member being formed while forming a recess in said adjoining face extending from said electrical conductor to an edge of said contact member to permit said conductor to extend laterally out beyond the edge of said contact member when bent over at its point of emergence.

3. The method of manufacturing a molded electrical contact member having a working face and an adjoining face substantially perpendicular thereto, which comprises; compressing at an elevated temperature divided carbonaceous material containing a resin binder into a preform having a depression in the side corresponding to said adjoining face of the molded contact member, placing a terminal portion of an electrical conductor in said depression so that said conductor extends perpendicularly from said side, applying pressure perpendicular to said side of said preform to mold said terminal portion of the conductor in said contact member while forming a recess in said adjoining face of said contact member extending from the molded-in conductor to an edge of said contact member to permit said conductor to extend laterally out beyond the edge of said contact member when bent over at its point of emergence.

4. The method of manufacturing a molded electrical contact member having a working face and an adjoining face substantially perpendicular thereto, which comprises;

compressing a finely divided carbonaceous material into a preform having an elongated depression in the side corresponding to said adjoining face of the molded contact member, placing a terminal portion of an electrical conductor in said depression so that said conductor extends perpendicularly from said side, bending said terminal portion in the direction of said elongated depression prior to placing it in said depression, applying pressure perpendicular to said side of said preform to mold said terminal portion of the conductor in said contact member while forming a recess in said adjoining face of the molded contact member, said recess extending from the molded-in conductor to an edge of said contact member to permit said conductor to extend laterally out beyond the edge of said contact member when bent over at its point of emergence.

5. The method of manufacturing molded-in shunt brushes having a working face and an adjoining face substantially perpendicular thereto, which comprises; heating and compressing a carbonaceous molding compound to a temperature of from 30° C. to 80° C. and to a pressure of ½ to 2 tons per square inch to form a preform having a depression in the side corresponding to said adjoining face of the molded brush, placing a portion of an electrical conductor in said depression so that said conductor extends perpendicularly from said side, and then applying a molding pressure of from 2 to 10 tons per square inch perpendicular to said side of said preform while heating to a temperature of from 140° to 200° C., forming a recess in said adjoining face of the molded brush while applying said molding pressure, maintaining said last-mentioned temperature and pressure for a period of about five minutes and finally overcuring the molded product at about 200° C. for substantantially one hour.

References Cited in the file of this patent

UNITED STATES PATENTS

1,612,337	Wilson et al.	Dec. 28, 1926
1,804,052	Haas	May 5, 1931
1,815,721	McGraw	July 21, 1931
1,856,680	Williams et al.	May 3, 1932
2,047,043	Strickland	July 7, 1936
2,454,508	Herrick et al.	Nov. 23, 1948

FOREIGN PATENTS

245,798	Sweden	Aug. 1, 1947

UNITED STATES PATENT OFFICE

CERTIFICATE OF CORRECTION

Patent No. 2,855,630 October 14, 1958

Hugh N. Veley

It is hereby certified that error appears in the printed specification of the above numbered patent requiring correction and that the said Letters Patent should read as corrected below.

Column 4, line 52, for "perform" read -- preform --; column 5, line 11, for "unform" read -- uniform --; line 13, for "pin" read -- bin --; column 7, line 51, for "oxides" read -- oxidizes --; column 8, line 59, after "temperature" insert -- a finely --; column 10, lines 9 and 10, for "over-curing" read -- oven-curing --; line 24, list of references cited, under "FOREIGN PATENTS", for "Sweden" read -- Switzerland --.

Signed and sealed this 5th day of May 1959.

(SEAL)
Attest:

KARL H. AXLINE
Attesting Officer

ROBERT C. WATSON
Commissioner of Patents