United States Patent

[11] 3,631,651

[72] Inventor **Georg Kopp**
Neuhausen am Rheinfall, Switzerland

[21] Appl. No. **876,852**
[22] Filed **Nov. 14, 1969**
[45] Patented **Jan. 4, 1972**

[73] Assignee **Schweizerische Industrie-Gesellschaft**
Neuhausen am Rheinfall, Switzerland

[32] Priority **Nov. 19, 1968**
[33] **Switzerland**
[31] **17237/68**

[54] **DEVICE FOR GROUPWISE PACKING OF BAGS**
6 Claims, 6 Drawing Figs.

[52] **U.S. Cl.** **53/123,** 53/244, 53/247, 53/159
[51] **Int. Cl.** **B65b 63/00,** B65b 35/38
[50] **Field of Search** 53/123, 142, 159, 180, 235, 244, 249, 250, 251, 247

[56] **References Cited**
UNITED STATES PATENTS

3,456,423	7/1969	Helms	53/242 X
2,601,376	6/1952	Eaton	53/180 X
2,697,541	12/1954	Patterson et al.	53/244 X
2,784,540	3/1957	Jarund	53/180
3,006,121	10/1961	Omori	53/180
3,237,369	3/1966	Stroop	53/180

Primary Examiner—Robert L. Spruill
Attorney—Singer, Stern & Carlberg

ABSTRACT: A device for groupwise packing of bags which are fed to a packaging station in the form of a band which comprises series of transversely and lengthwise connected bags. These bags are connected with each other by narrow compressed and welded linelike areas along which the band is cut transversely and lengthwise to form individual bags at a cutting table which cooperates with suction heads which lift the individual bags from the table and then transfer the bags to an adjacent packaging container into which the individual bags are loaded in the form of a stack by removing the bags from the suction heads by strippers.

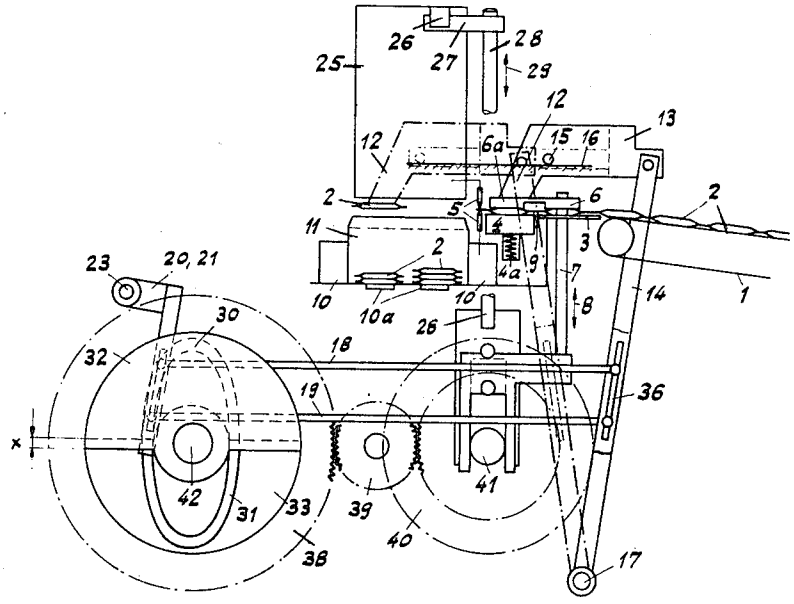

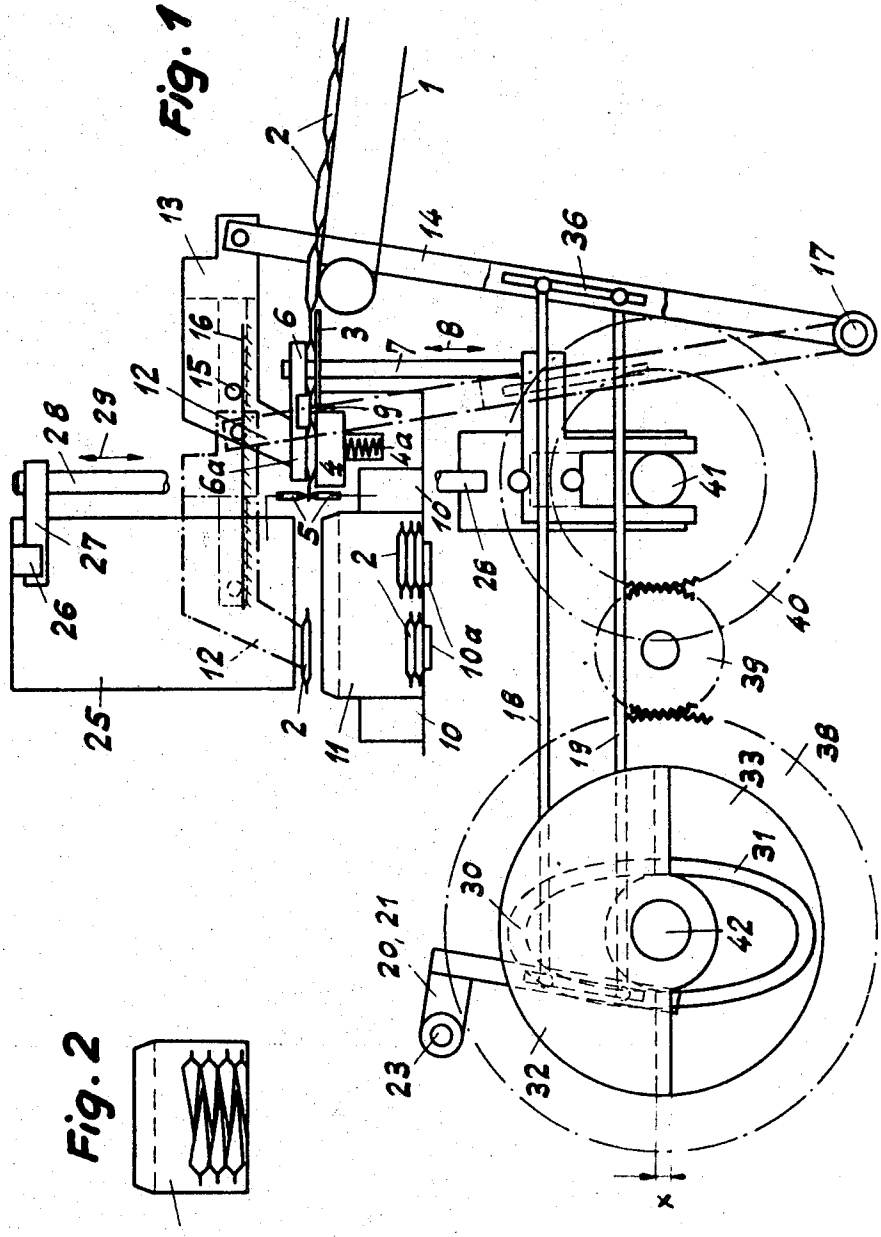
1
2
3
4
4a
5
6
6a
7
8
9
10
10a
11
12
13
14
15
16
17
18
19
20, 21
23
25
26
27
28
29
30
31
32
33
36
38
39
40
41
42
x

Fig. 1

Fig. 2

Fig. 3

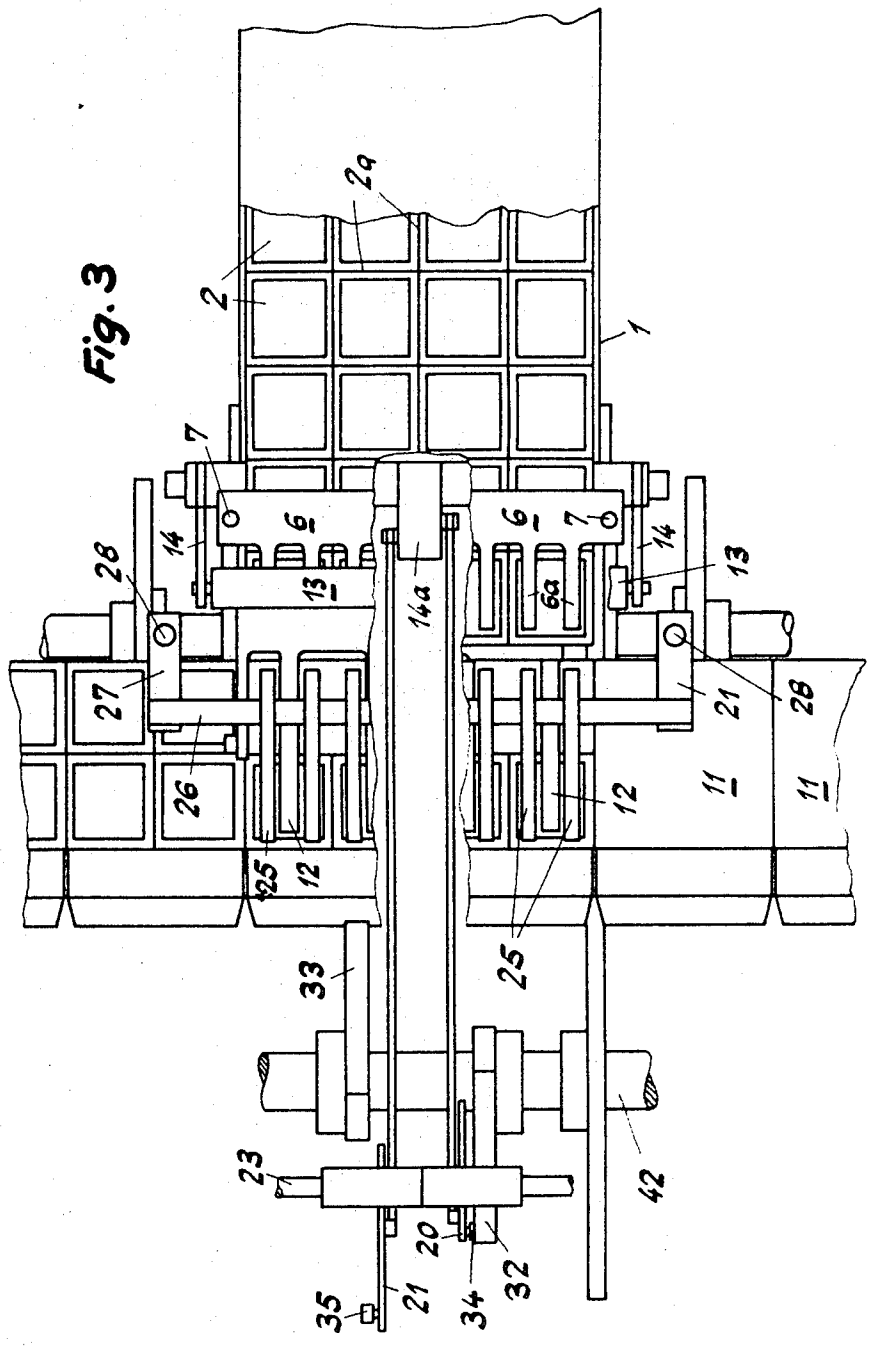
29
2
1
7
6
6
7
14
14
28
13
13
14a
6a
27
21
28
26
12
11
11
25
12
25
33
23
42
20
32
35
21
34

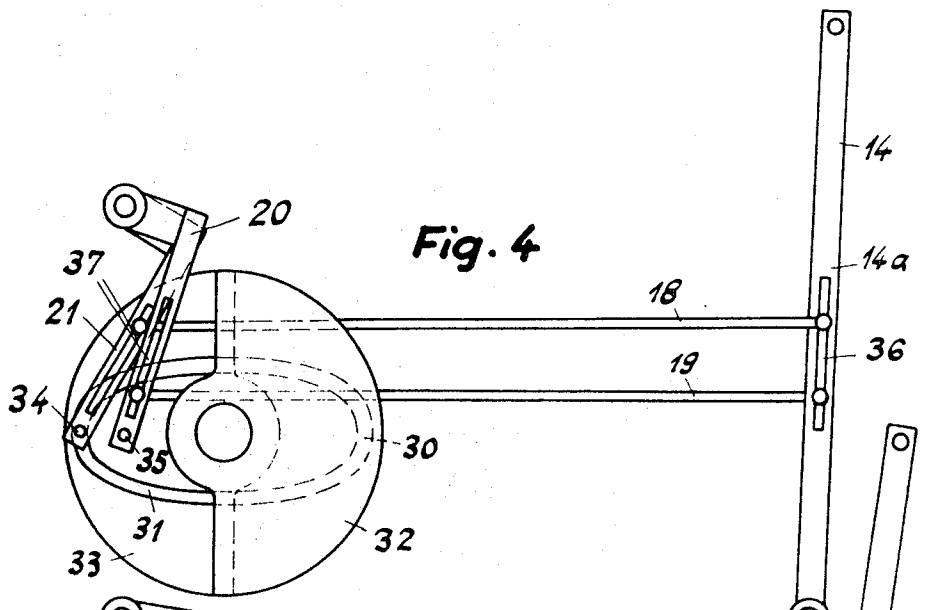

Fig. 4

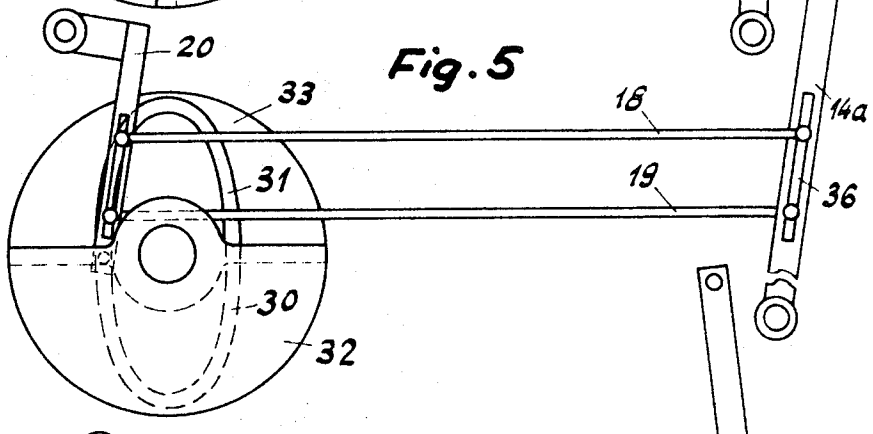

Fig. 5

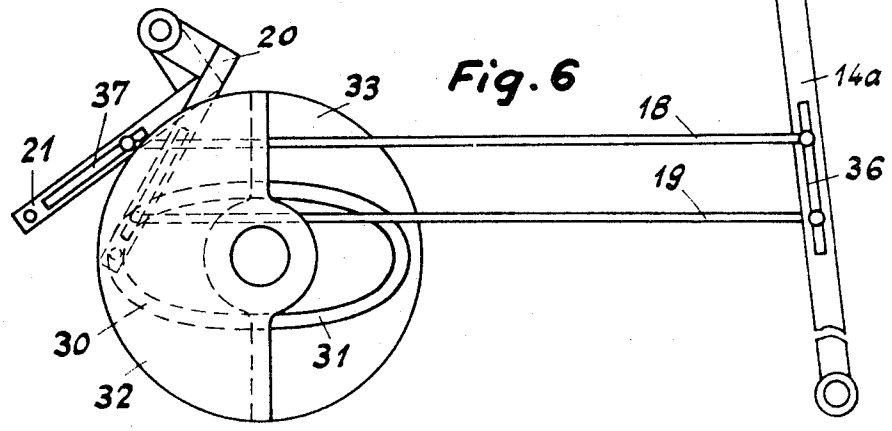

Fig. 6

DEVICE FOR GROUPWISE PACKING OF BAGS

This invention relates to a device for the group wise packing of bags which are supplied in form of a belt which has in its width several bags connected with one another.

Portioning bags for beverages to be produced, for example, tea, are ordinarily set up in a filling machine, said bags being made of paper strips which, for example, are combined by guide rolls and welded together lengthwise and transversely, simultaneously producing several bags which then still cohere at their edges and form a belt or band. Up to now this band was cut at the filling machine itself, lengthwise and transversely. The individual bags were then conveyed to a packaging machine in which they were counted off and filled group wise into a predetermined number of packaging containers. In this connection, occasionally disturbances occurred, for example, that too few bags were filled or unequal stacks were produced.

The object of the invention is a device of the mentioned type in which such disturbances cannot occur and which ensures stacking the bags in a varied arrangement in the packaging containers.

In accordance with the invention, the bags are conveyed as a coherent band directly to the grouping station, where means are arranged for separating individually the bags and for transferring them into a packaging container.

The drawing illustrates by way of example an embodiment of the device of the invention and in the following is used to describe the invention in greater detail.

IN THE DRAWINGS

FIG. 1 shows diagrammatically a side view of the device for the group wise packing of bags.

FIG. 2 shows a packaging container with overlapped stacked bags.

FIG. 3 shows a top plan of the device according to FIG. 1, in a position according to FIG. 6, and the

FIGS. 4–6 show each a side view of the drive device for the suction heads in three different operating positions.

Referring to the drawing, a conveyor belt 1 conveys filled bags 2 in the form of a band which comprises, in the embodiment shown, in its width four bags. These bags 2 are connected with one another at their edges suitably by means of scored weakened lines 2*a*. At the left-hand end of the conveyor belt 1 is located a table 3 and in alignment therewith is arranged a plate 4 which may be lowered against the pressure of a spring 4*a*. In front of the plate 4 is arranged a photocell with a transmitting lamp 5 which shuts off the drive of the conveyor belt 1 as soon as the edge of a bag interrupts the beam of light between the transmitting lamp and the photocell. At this moment one series of bags at a time is located on the plate 4 and another series of bags is on the table 3. Above the table 3 and the plate 4 is arranged a pressure member 6 which is fixed on rods 7 to which, in a manner not described in greater detail, is imparted by a control cam, a thrust movement in direction of the longitudinal axis of the rods, as indicated by the double arrow 8. The presser member 6 has horizontal fingers 6*a* each two of which are adapted to engage one bag. The plate 4 has at its upper rim projecting edges 9. If now the presser member 6 carries out a downward thrust movement, the bags are separated from one another along the weakened lines 2*a*, and accordingly are separated individually from the band.

The device is also provided with two conveyor belts 10 which move opened cardboard containers 11 transversely to the direction of feed of the conveyor belt 1 on the rails 10*a* to the plate 4. The feed of the containers 11 takes place stepwise, whereby each container or box remains in front of the plate 4 just so long until it is filled with a predetermined number of individual bags 2.

The device is now to operate in such manner that the bags 2 may be stacked in different manner in the boxes 11, for example in parallel rows with the bags on top of one another in each row as shown in FIG. 1 or mutually overlapping one another—in a desired amount—as shown in FIG. 2.

For transfer of the bags 2 from the plate 4 into the box 11 there are provided suction heads 12 which are connected to a source of suction air, not shown. The suction heads 12 are attached to a beam 13. The beam 13 is attached to the upper end of a pair of upright levers 14 and is supported by rollers or pins 15 on a horizontal guide track 16. The pair of levers 14 is pivotally journaled at the other lower end on a pin 17. In addition to the two levers 14 there is arranged on the pin 17 a central lever 14*a* which is rigidly connected with the levers 14 and on which are attached two horizontal and spaced parallel rods 18, 19, which are connected with pivotal parts 20, 21 which on their part are swingably journaled on a common pin 23. These pivotal levers 20, 21 and the rods 18, 19 shift the beam 13 with the suction heads 12 periodically over a predetermined angle. This angle, as will be explained further on, is variable in such manner that the suction heads are swung either each time about the same angle or only at each second thrust about the same angle, while during intermediary thrusts, however, the suction heads are swung through another angle.

As soon as the presser member 6 releases the separated bags, the suction heads meanwhile applied, pick up the bags positioned on the plate 4 (compare FIG. 1). Now the suction heads 12 are moved for example into the position shown in dotted lines in FIG. 1 in which the bags are located over the left-hand stack of bags in the box 11.

In order to bring the bags into the box 11, mechanical strippers 25 are provided, each two of which engage a bag on both sides of the suction head 12. The individual strippers 25 are arranged on a bar 26 which is held by the horizontal carriers 27. The carriers 27 are attached to the upper ends of vertical rods 28 which are moved by means of cam discs and perform a vertical movement, as indicated, by the double arrow 29 (FIG. 1). Upon each downward movement all of the bags 2 are stripped from the suction heads 12. The stripper 25 during its engagement with the bags is advantageously subjected to an acceleration which exceeds the acceleration caused by gravity. In this manner the bags are kept under control during their insertion into the boxes.

The suction heads are controlled in such manner that they are swung alternatingly about a greater or a smaller angle. In this manner it is possible to insert the bags 2 in two stacks lying adjacent one another in the box 11, as shown in FIG. 1. The pivotal angle of the pair of levers 14 may, however, be altered in order to insert the bags into the containers in an overlapping position as shown in FIG. 2 or are only superimposed to form a single stack.

For this purpose each of the two pivot levers 20, 21 engages with guide rollers a semieliptical guide groove 30 or 31, respectively, provided in a separate control disc 32 or 33, respectively, (FIG. 3). The control discs are mounted rigidly on a horizontal drive shaft 42 and viewed from the side have the shape of segments of a circle which overlap in the center in a range *x*. On the pivot levers 20, 21 are mounted rollers 34, 35 which engage the guide grooves 30, 31, respectively. In the positions of the control discs according to FIGS. 1 and 5, in which the main axis of the ellipse formed by the two guide grooves 30, 31 is perpendicular the two pivot levers 20, 21 with their rollers 34, 35 engage simultaneously in the overlapping zones of the guide grooves. In all other positions of the control discs, however, only one pivotal lever engages its guide groove. During a complete revolution of the drive shaft 42, for example, starting with position of the control discs shown in FIG. 1 the pivot lever 21 is guided during the first 180° of rotation, in its guide groove 31, while the other pivot lever 20 is out of engagement with its guide groove 30. During the second 180° of the rotation the pivot lever 20 in in engagement with its guide groove 30. Since both pivot levers 20, 21 are connected rigidly with one another by the rods 18, 19, and the lever 14*a*, it is obvious that the pivot lever not engaging in its guide groove also performs a pivotal movement.

The spaced horizontal rods 18, 19 are pivotally connected at both ends with pins which are adjustably mounted in slots

36, 37, respectively, extending lengthwise in the lever 14 or in the pivot levers 20, 21, respectively. In this manner it is possible to adjust the desired pivotal angle of the lever 14 which carries the suction heads 12.

The drive shaft 42 has mounted thereon a gear wheel 38 (FIG. 1) which drives by means of an intermediary wheel 39 a gear wheel 40 on the shaft 41 with twice the number of revolutions. The shaft 41 has attached thereto the control cams (not shown) for the drive of the pressor 6 and the stripper 25. The latter accordingly perform two strokes during each complete revolution of the drive shaft 42.

In the arrangement shown in FIG. 1, the pair of levers 14 with the suction heads 12 performs the greater pivotal movement in the dotted line position when the pivot lever 20 engages its guide groove, since its rod 19 is fixed closer to the pivot point 17 on the lever 14*a* and is farther away from the pivot point 23 on the lever 20.

It is obvious that in place of two separate control discs 32, 33 it would be possible to employ only one control disc with a closed guide groove extending over 360°. The described embodiment with two control discs makes possible, however, a continuous adaptation of the movement of the suction heads 12 to the different conditions. By adjusting the pivot pins of the rods 18 and 19 in the slots 36, 37, the overlapping of the bags inserted in the box one after the other may be adjusted as desired.

What I claim is:

1. Device for packaging bags at a packaging station, comprising

a. means for conveying to said packaging station a plurality of bags in the form of a coherent band composed of individual bags which are attached to each other in a direction transverse to the conveying direction to form transverse rows of bags,

b. means at said packaging station for separating the bags in at least the leading transverse row of said bags from each other and from said band,

c. means for gripping and holding said separated bags,

d. means for moving said gripping and holding means to a position with the bags above a packaging container, and

e. stripping means for releasing said separated bags from said gripping and holding means and lowering said bags into said packaging container independently of the gravity force to form stacks of individual bags in said container.

2. Device according to claim 7, including a vertically movable presser member, means for moving said presser member in a vertical direction up and down, said presser member cooperating with a movable plate disposed below said presser member and receiving the foremost row of bags in order to separate the same from one another along scored weakening lines provided in said band, and periodically movable suction heads for engaging said separated bags and for transferring the same into a packaging container.

3. Device according to claim 2, including vertically movable strippers cooperating with said suction head for releasing the bags from the latter.

4. Device according to claim 2, including drive means for causing said suction heads to be moved in two successive operative strokes over operative conveying distances of varying length.

5. Device according to claim 2, including drive means for causing said suction heads to be moved in two successive operative strokes over operative conveying distances of varying length, said suction heads being mounted on pivotally mounted levers, and a linkage attached to said levers and operated by control discs having guide grooves operatively connected with said linkage.

6. Device according to claim 5, in which two control discs are provided in the form of sectors of a circle, each of which having an open guide groove, said grooves forming together a single closed guide groove, while for each control disc a separate pivot lever is provided which is operatively connected with its own guide groove, and whose movement is transferred by a separate rod to the lever carrying the suction heads.

* * * * *