Aug. 8, 1939. W. M. LEE ET AL 2,168,801

X-RAY APPARATUS

Filed March 9, 1938 3 Sheets-Sheet 1

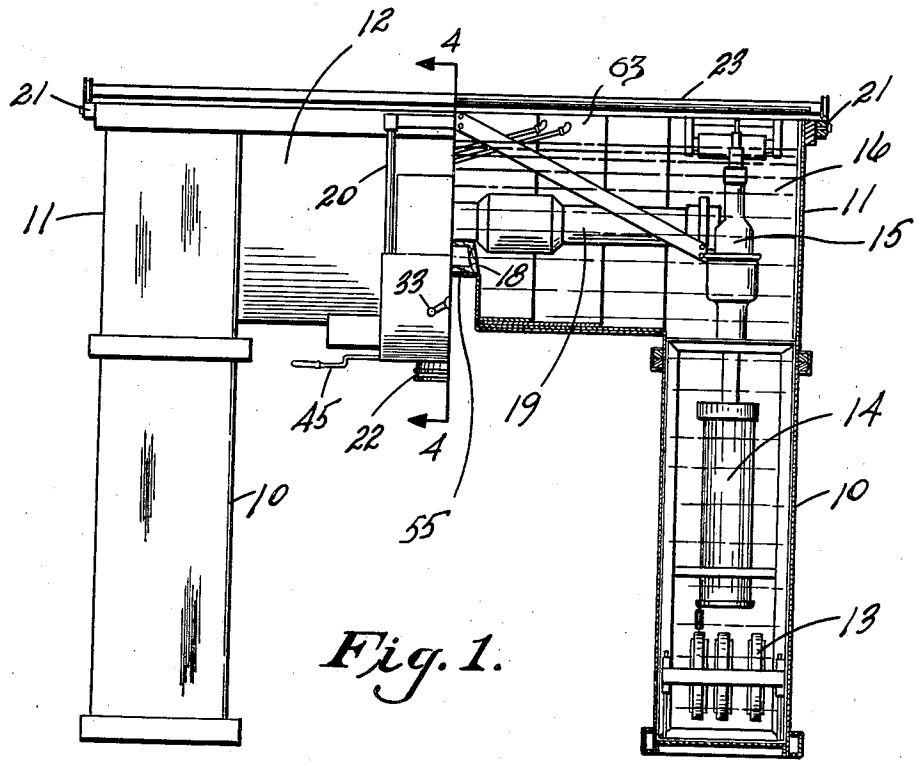

Fig. 1.

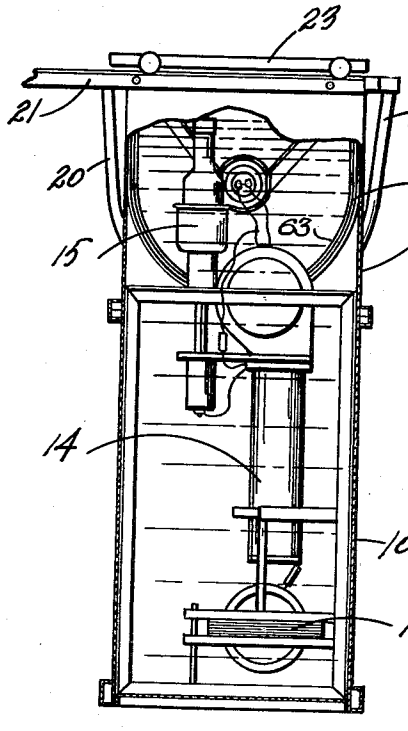

Fig. 2.

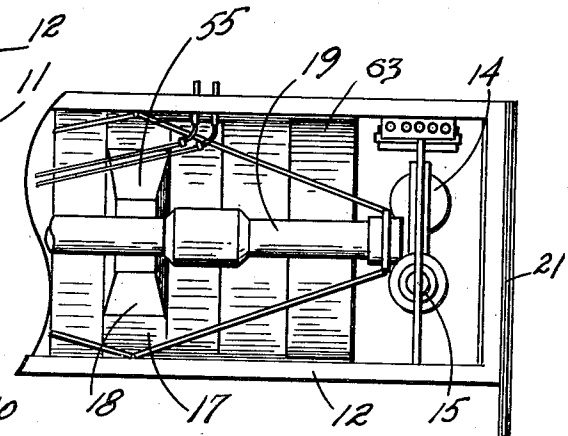

Fig. 3.

INVENTORS
WALTER H. HAUPT
WILLIAM M. LEE
BY
Chester Tietig
ATTORNEY.

Aug. 8, 1939. W. M. LEE ET AL 2,168,801

X-RAY APPARATUS

Filed March 9, 1938 3 Sheets-Sheet 2

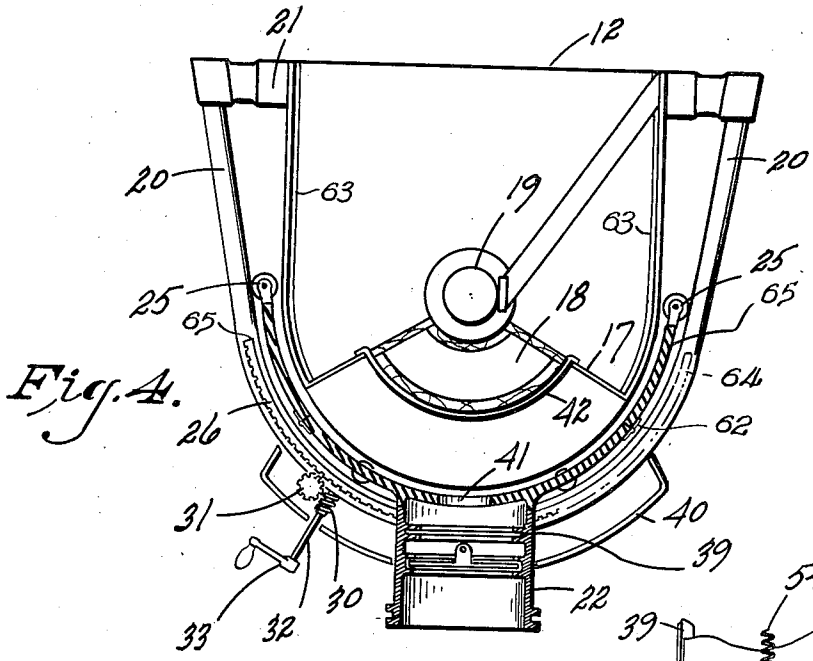

Fig. 4.

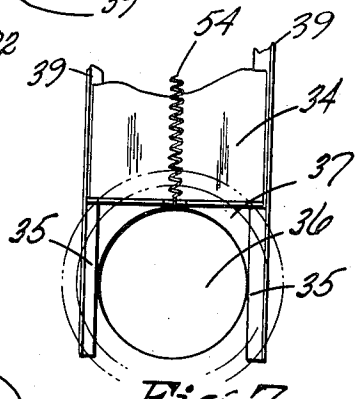

Fig. 7.

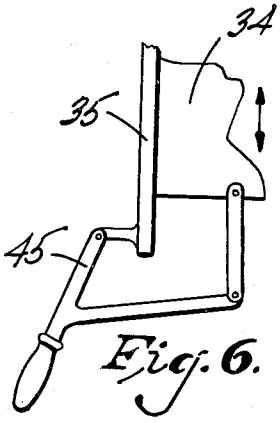

Fig. 6.

Fig. 5.

INVENTORS
WALTER H. HAUPT
WILLIAM M. LEE

ATTORNEY.

Aug. 8, 1939. W. M. LEE ET AL 2,168,801

X-RAY APPARATUS

Filed March 9, 1938 3 Sheets-Sheet 3

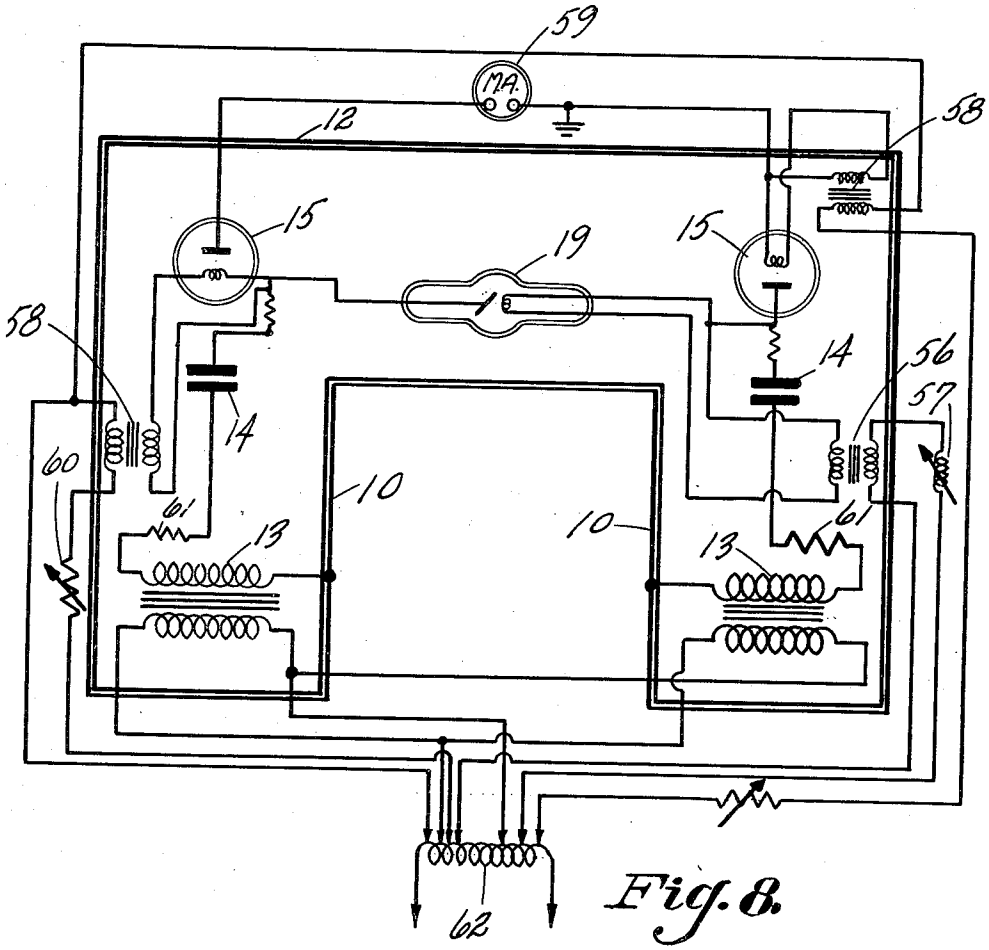

Fig. 8.

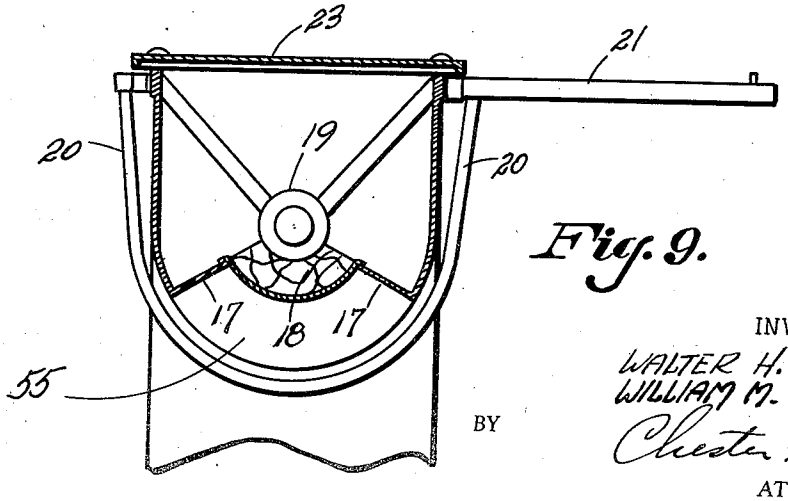

Fig. 9.

INVENTORS
WALTER H. HAUPT
WILLIAM M. LEE
BY Chester Vietty
ATTORNEY.

Patented Aug. 8, 1939

2,168,801

UNITED STATES PATENT OFFICE

2,168,801

X-RAY APPARATUS

William M. Lee, Covington, and Walter H. Haupt, Ludlow, Ky., assignors to The Kelley-Koett Manufacturing Company, Inc., Covington, Ky., a corporation of Ohio

Application March 9, 1938, Serial No. 194,897

3 Claims. (Cl. 250—87)

This invention relates to X-ray apparatus intended for deep therapy or any other X-ray use in which an exceptionally stable and convenient apparatus is required for long continued radiation.

Among the advantages resulting from this invention are the convenient handling of patients on stretchers or wheeled tables, the ease of adjustment of the X-ray beam, the low center of gravity of the apparatus and the efficient oil insulation of transformers, valve tubes and X-ray tube all in one bath of oil. The last feature promotes equalization of temperatures inside the apparatus.

The invention herein described comprises not only the general arrangement of the major parts of an X-ray apparatus, but also the specific circuit and the mechanical arrangement in relation thereto.

Referring to the drawings, Fig. 1 is a front elevation, the right side of which shows the interior arrangement of parts. It is to be understood that the left side is internally substantially the same.

Fig. 2 is a view taken from the left end of Fig. 1 showing the internal arrangement of parts.

Fig. 3 is a plan view of the right half of Fig. 1, and also shows the internal parts.

Fig. 4 is a cross section taken along the line 4—4 of Fig. 1.

Fig. 5 is a front view of a longitudinal section of the X-ray beam-directing mechanism.

Fig. 6 is a detail of the X-ray screen closing lever.

Fig. 7 is a plan view of the ray restricting cylinder showing the screen slide mechanism. It is taken on the line 7—7 of Fig. 5.

Fig. 8 is a diagrammatic representation of the electric circuit employed.

Fig. 9 is an end view of the upper part of Fig. 1 as seen from the left side and showing how the X-ray tube is supported.

Referring now to Figs. 1 and 2, 10—10 are two metal casings, tanks or pedestals, preferably rectangular in section and adapted to hold insulating oil. In practice, they are somewhat higher than the ordinary rolling table used in hospitals, with the patient reclining thereon. Above the casings 10—10 there are tank-like superstructures 11—11, likewise of metal and likewise oil tight. A trough shaped casing 12 connects the two superstructures 11—11, thereby forming a bridgelike structure under which a patient reclining on a rolling table, can pass. The trough is so arranged that the oil filling the structures 10, 11 and 12 is in intercommunication and forms substantially the same body of oil, thereby preventing local overheating.

In the lower part of each casing 10 there is supported a high tension transformer 13. Since transformers are quite heavy, this location adds to the stability of the apparatus. Above the transformers are operatively arranged in the order named, a condenser 14 and a valve tube 15 for rectifying high tension current. The latter is also attached to the top of trough 12. It is to be understood that all electrical parts are insulated from the walls of the tanks or casings by means of suitable mechanical insulators as well as a bath of high grade insulating oil 16. The latter also substantially fills the trough 12 so that the oil in both pedestals and in the trough constitutes a single body. This permits convection currents to circulate and so to bring about cooling of locally overheated parts.

Referring to Figs. 2, 3, 4 and 8, 9, it will be seen that in the middle of trough 12 there is a support or cradle 17 upon which rests a hollowed segment 18 of wood. Beneath the target of the tube, the trough 12 has a re-entrant elongated window 55 for the emergence of the X-ray beam. The window is of such an arrangement that X-rays are cast through it to both sides of the apparatus. It is shown on the drawings in Figs. 1 and 3 and is sealed in the usual manner with thin metal such as copper which is permeable to X-rays.

Bounding the middle portion of trough 12 are two yokes 20. They nearly encircle the trough and terminate at the top of trough 12. The yokes are tracks upon which a filter cylinder is rotated as a swinging radius. The top rails 21 are likewise tracks upon which a cover 23 is adapted to roll; ordinarily it covers the trough but can be pushed back when inspection of the interior of the trough is necessary.

Between the yokes 20 and the trough 12 there is a hemispherical carriage 24 which is provided with rollers 25 which are adapted to run upon the yokes 20. Without some means for retaining the carriage in elevated position however, it would fall by gravity. The combined elevating and retaining device 56 comprises a curved rack 26 which is attached to the side of one yoke 20, and a pinion 27, meshing with the rack, a pinion shaft 28, bearings 29, mounted upon the carriage, a worm wheel 30 mounted upon the shaft, a worm 31 attached to the carriage, a worm shaft 32 and a hand crank 33 thereon. A housing 40 covering the worm gearing is also provided.

For the purpose of shielding the patient, op-

erators, etc., from X-rays where or when they are not desired, a shield 63 of lead or other X-ray proof material is provided to line the trough 12 on each side of the anode and cathode assembly of the X-ray tube. As shown in Figs. 2 and 4, the central portion of the trough 12 above the cradle 17 may also be protected. That part of the trough which is enclosed between the cradles 17 but not including the area enclosed by the cylinder 22 is protected by a shield 64.

If the carriage 24 were not provided with some means of articulation, it could not run freely about the lower part of trough 12. Such means as the hinges 62 are attached to the outer surface of carriage 24, thereby providing a pair of flexible tips 65 at the upper ends of the carriage. By the action of hinges 62, flaps 65 bend outward to conform to the path of rails 20 and have no tendency to dig into the upper portion of trough 12 as would be the case if the hinges were not present.

In giving therapy treatments, it is desirable that the apparatus be functioning and that the patient be in proper position to receive the ray before any actual exposure takes place. This calls for some means for screening the ray before treatment. Such means are provided on this apparatus as follows:

Referring to Figs. 4, 5, 6 and 7, a slide 34 is arranged to run in tracks 35 which extend across the cylinder 22, and by covering an opening 36 in a metal web 37 within the cylinder, shut off the X-ray beam until it is needed. The slide moves from the position shown in plan in Fig. 7 and in vertical section in Fig. 5, this being the open position.

Above the shut-off slide 34, there is a somewhat similar one 38 which is a filter slide. It runs in tracks 39, shown in Fig. 4, and is preferably arranged to be operated from the opposite end from which the shut-off slide is operated. The filters are very thin sheets of copper or aluminum.

Above cylinder 22 and extending thru carriage 24 and trough 12, there is an opening 41 for the emergence of the X-ray beam. The lower segment of trough 12 below the cradle-partition 17 remains empty of oil. However, the top of the cradle-partition, upon which the wood blocks 18 rest, is surmounted by a thin copper sheet 42 which is strong enough to support the wood block and is impermeable to oil but transparent to X-rays.

Within a housing 43 extending to the left of cylinder 22, there is contained mechanism for actuating the slide 34. Part of this device is mounted upon an upper deck 44, integral with the cylinder 22, and other parts are mounted on the lower part of the housing 43. The slide 34 is retractable by means of a compound lever 45 which works against a long coil spring 54 extending between slide 34 and deck 44. When in retracted position it is held by a pin 46 which travels with slide 34. A trigger 47 catches against pin 46 when the slide is completely shut. Trigger 47 may be tripped by a link mechanism 48 which is operable thru a rod 49 which is in turn retractable by a solenoid 50. Or it may be manually set or tripped by a hand grip 51 which extends outside the case. A spring 52 is provided between case and solenoid to push the trigger 47 back to operative position after it has been tripped. A dash pot 53 is provided below deck 44 to cushion the shock of release. It will therefore, be seen that the slide is cocked by the tension of spring 54 when the slide 34 is blocking the X-ray beam. The solenoid 50 may be tripped by remote control so that no one except the patient will be exposed to the X-ray beam.

Electrically, as shown by Fig. 8, the circuits of the deep therapy apparatus are conventional except in their mechanical disposition of parts. The supporting tanks 10 and the trough 12 are therefore indicated in Fig. 8 and the electrical parts within then are indicated by appropriate electrical symbols placed in the same positions as are occupied by the parts themselves. Small parts, which have not been shown on the other figures but which are essential for operation comprise the X-ray tube filament transformer 56 with control 57 for regulation of the heating current supplied to the filament of the X-ray tube. Other filament heating transformers 58 supply heating current to the filaments of the valve tubes. A milliammeter 59 is connected outside the housing according to which the heating current may be controlled. A second control 60, is also provided outside the housing. Resistances 61 are provided between high tension transformers 13 and the condensers 14.

A control cabinet (not shown) may be conveniently provided to house an auto-transformer 62 together with control 57, 60, instrument 59 and other instruments and controls so that the operation of the X-ray tube and its filters may be accomplished from a room remote from the treatment chamber. Such control is however conventional.

In operation of this apparatus, the patient is wheeled under the middle of trough 12 on a wheeled bed or chair; the crank 33 is manipulated to turn worm 56 and pinion 27 to roll the carriage 24 in the desired direction to point the cone 22 to the location to be treated. The slide 34 is in position to shut off the ray. The X-ray tube 19 is then energized in the conventional manner, slide 34 is then retracted by tripping electromagnet 50 either by remote control or manually by button 51 and rod 49.

During the treatment, the intensity or hardness of the X-ray beam may be varied by manipulation of the controls of the autotransformer 62 which control cabinet is remote from and not a part of this apparatus.

We claim as our invention:

1. In an X-ray apparatus two upright tanks, a trough of substantially U shaped cross section between them, a slidable lid over said trough, a window for the emergence of an X-ray beam from substantially the lower middle area of said trough, a carriage bearing shielding material, a ray-directing cylinder or cone rotatable about the window-bearing section and means for flexing the upper ends of said carriage, whereby the latter may be accommodated to the contour of the said trough.

2. In an X-ray apparatus, two upright tanks, a trough of substantially U shaped cross section between them, an X-ray tube in said trough, a lid over said trough, means for displacing said lid rearwardly as a whole, a pair of rails, said carriage being opposite a window in said trough, means for traversing said carriage, on said rails, said means comprising a rack and pinion, said carriage being traversible only to such an extent that the movement of said lid is not interfered with and a pair of flaps attached to the upper ends of said carriage whereby the contour of said carriage may be adjusted to the contour of said trough.

3. In an X-ray apparatus, a trough, a stationary X-ray tube in said trough, an X-ray permeable, elongated window opposite said X-ray tube in said trough, through which window X-rays can be cast to both sides of said trough, means for supporting said trough by its ends, an X-ray impermeable carriage circumferentially movable about said trough on both sides thereof, X-ray-impermeable flaps attached to the upper ends of said carriage whereby X-rays of undesired direction may be excluded from the field where said rays are to be utilized, a shutter opposite said window and external thereto being mounted upon said carriage, a ray directing cone carried by said carriage and mounted in alignment with said shutter, said carriage, shutter and cone constituting a means whereby the emergence of X-rays through the window may be controlled on either side of said trough.

WILLIAM M. LEE.
WALTER H. HAUPT.