United States Patent

[11] **3,561,448**

[72] Inventor **Jacob Peternel**
2917 E. 121 St., Cleveland, Ohio 44120

[21] Appl. No. **756,583**
[22] Filed **Aug. 30, 1968**
[45] Patented **Feb. 9, 1971**

[54] **BLOOD VESSEL SUTURING APPARATUS**
11 Claims, 5 Drawing Figs.

[52] **U.S. Cl.** **128/334,** 128/346; 279/3
[51] **Int. Cl.** **A61b 17/11**
[50] **Field of Search** ..... 128/334, 335, 346, 303, 297—300; 279/3; 132/38

[56] **References Cited**

UNITED STATES PATENTS

1,151,300	8/1915	Soresi	128/214
2,704,541	3/1955	Wyatt	128/303X
2,767,705	10/1956	Moore	128/4
2,940,451	6/1960	Vogelfanger et al.	128/334X
3,254,650	6/1966	Collito	128/334
3,361,133	1/1968	Kimberry et al.	128/346

Primary Examiner—Dalton L. Truluck
Attorney—Yount, Flynn & Tarolli

ABSTRACT: An improved clamp assembly for positioning blood vessels applies suction to end portions of blood vessels to hold the blood vessels in a generally cylindrical shape with outwardly flaring ends which are held in engagement to facilitate interconnecting or sewing together of the blood vessels. Accordingly, the clamp assembly includes a pair of sleeves each of which defines a generally cylindrical manifold which is connected in fluid communication with a source of vacuum or low pressure. The manifold is also connected in fluid communication with an interior portion of the sleeve to thereby apply suction to the outer wall of an empty blood vessel and draw or urge the wall of the empty blood vessel outwardly to a shape similar to the normal shape of the blood vessel.

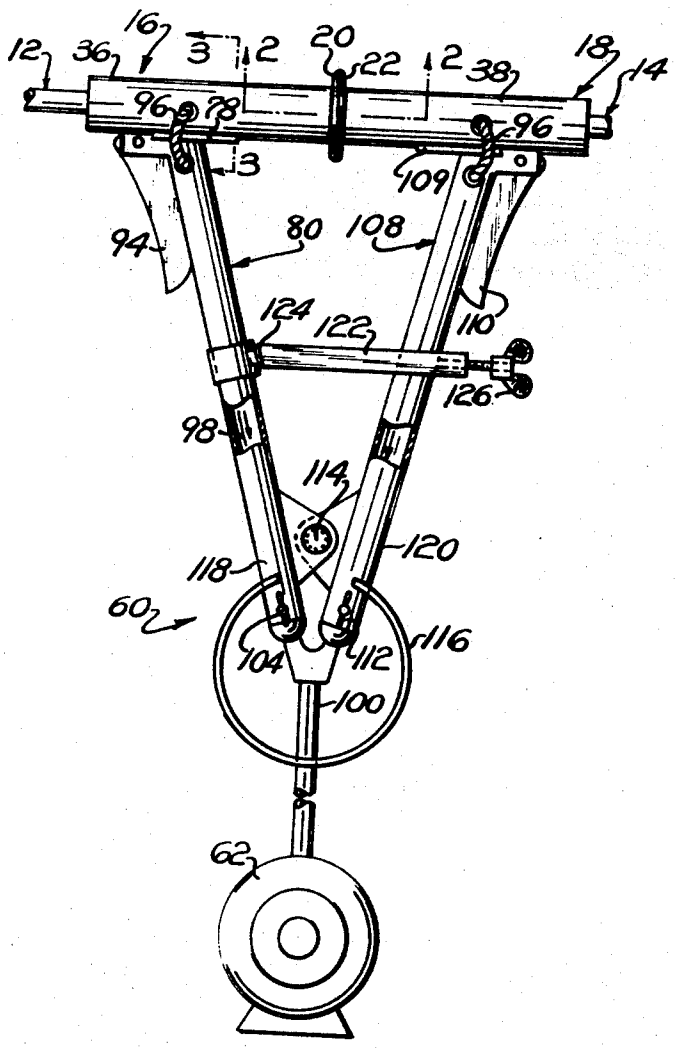

PATENTED FEB 9 1971

3,561,448

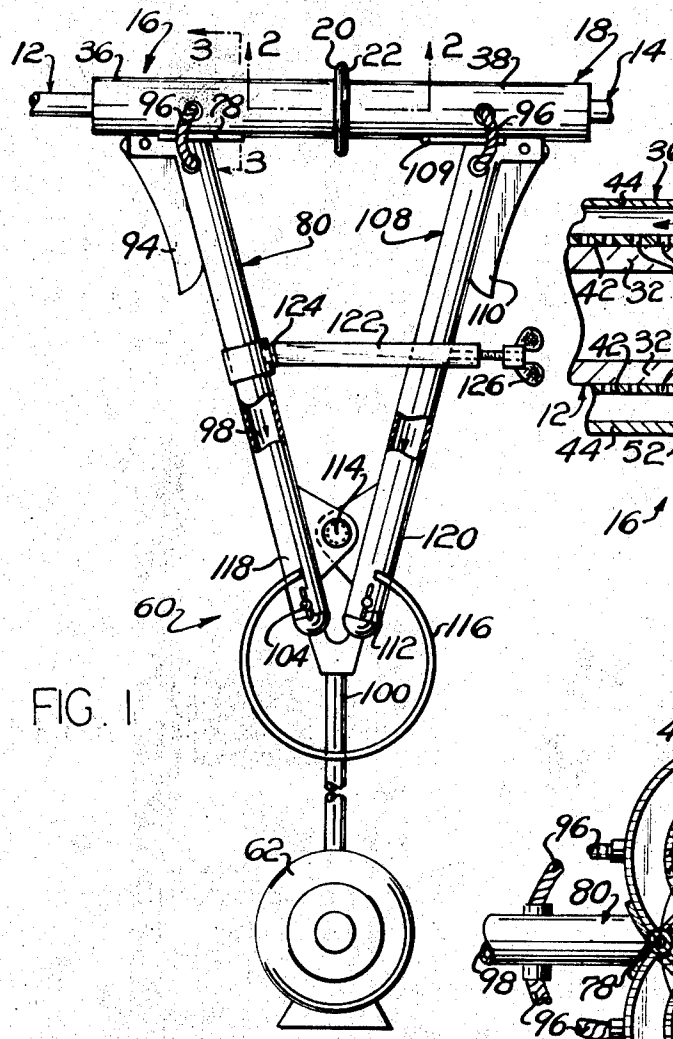

FIG. 1

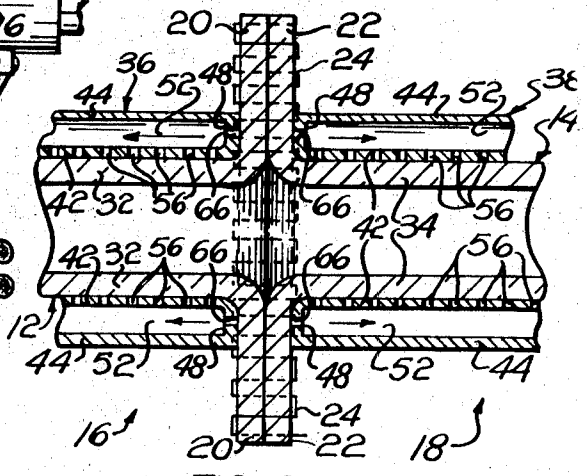

FIG. 2

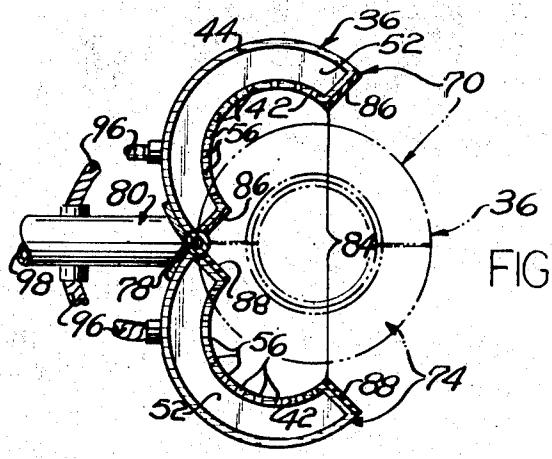

FIG. 3

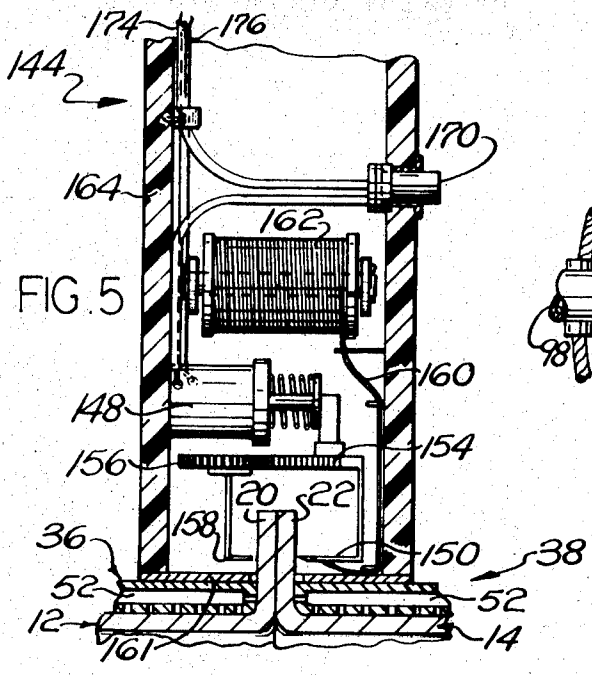

FIG. 5

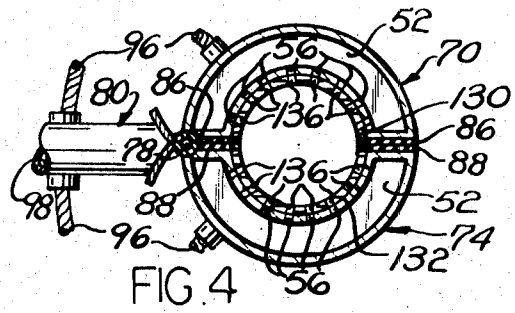

FIG. 4

INVENTOR.
JACOB PETERNEL
BY
Yount, Flynn & Tarolli
ATTORNEYS

BLOOD VESSEL SUTURING APPARATUS

This invention relates to a clamp assembly for positioning and holding blood vessels to be interconnected.

The interconnecting of blood vessels and other tubular body elements is presently done by hand positioning and sewing or suturing of end portions of the blood vessels. This hand positioning and sewing of blood vessels is a time-consuming process which is particularly onerous when a body organ, such as a kidney or heart, is transplanted. Accordingly, it is an object of this invention to provide a new and improved apparatus for facilitating the interconnection of blood vessels and similar tubular body elements.

Another object of this invention is to provide a clamp assembly which applies suction to severed blood vessels in such a manner as to hold them in a generally cylindrical shape and to tend to flare the ends of the blood vessels outwardly so that the ends can be pressed together and sutured.

Another object of this invention is to provide a clamp assembly which applies suction to empty end portions of blood vessels to hold them in a shape generally similar to their normal shape and to position the ends of the blood vessels in engagement to thereby facilitate their interconnection.

Another object of this invention is to provide a compact sewing machine for suturing blood vessels held by a clamp assembly constructed in accordance with the foregoing paragraph.

These and other objects and features of the invention will become more apparent upon a consideration of the following description taken into connection with the accompanying drawings wherein:

FIG. 1 is a schematic plan illustration of a clamp assembly constructed in accordance with the present invention, the clamp assembly being shown in engagement with end portions of blood vessels to be interconnected;

FIG. 2 is a schematic illustration, taken on an enlarged scale along the line 2–2 of FIG. 1, illustrating the relationship of a pair of sleeves of the clamp assembly to the end portions of the blood vessels;

FIG. 3 is a schematic sectional illustration, taken on an enlarged scale at the position of the line 3–3 of FIG. 1, depicting one of the sleeves of FIG. 2 in an open condition in which the sleeve is adapted to be positioned relative to the end portion of a blood vessel before engaging the blood vessel, the sleeve being shown in dashed lines in a closed condition in which the sleeve engages the blood vessels;

FIG. 4 is a schematic sectional illustration of the sleeve of FIG. 3 in the closed condition with a pair of inserts for sue in engaging relatively small blood vessels; and

FIG. 5 is a schematic illustration on an enlarged scale, of a compact sewing machine for suturing or sewing end portions of blood vessels held by the clamp assembly of FIG. 1.

The present invention provides a clamp assembly which holds end portions of empty blood vessels in a generally cylindrical shape by applying suction to the blood vessels. This suction is applied in such a manner as to tend to flare the ends of the blood vessels outwardly. The flared ends of the blood vessels are positioned in abutting engagement by the clamp assembly to facilitate interconnecting the blood vessels by sewing or suturing the flared ends. This sewing or suturing is advantageously performed with a compact, automatic sewing machine.

Although a clamp assembly **10**, constructed in accordance with the present invention, can be used to facilitate the interconnection of many different types of tubular body elements, the clamp assembly is illustrated in FIG. **1** in association with the end portions of a pair of blood vessels **12** and **14**. The blood vessels **12** and **14** are connected while they are held by positioning assemblies **16** and **18** with the ends **20** and **22** of the blood vessels flared outwardly and positioned in abutting engagement (see FIG. **2**). The outwardly flaring ends **20** and **22** extend beyond the positioning assemblies **16** and **18** and can be readily stitched or sutured, as indicated schematically at **24** in FIG. **2**, from either or both sides.

Of course, the flow of blood through the blood vessels **12** and **14** is stopped, by suitable clamps, before the blood vessels are interconnected. The walls **32** and **34** of the empty blood vessels then tend to collapse or assume a noncylindrical configuration. When the blood vessels are so collapsed, it is difficult to position their ends in matching, uniform engagement for stitching or suturing. To eliminate this difficulty, the positioning assemblies **16** and **18** include cylindrical sleeves **36** and **38** which hold the end portions of the blood vessels **12** and **14** in a cylindrical configuration similar to their normal shape.

In order to hold the end portions of the blood vessels in their normal shape, the sleeves **36** and **38** include cylindrical inner and outer walls **42** and **44** which are interconnected by annular end walls **48** to form vacuum or suction manifolds **52** (see FIG. **2**). The inner walls **42** of the sleeves have a generally cylindrical configuration and define a plurality of passages or apertures **56** which connect the manifolds **52** in fluid communication with the interior of the sleeves. The manifolds **52** are connected by a conduit arrangement **60** (FIG. **1**) to a vacuum pump or low pressure source **62**. Operation of the vacuum pump **62** provides a vacuum or low pressure in the manifolds **52** to thereby apply suction to the outer surfaces of the blood vessel walls **32** and **34** to draw or suck the walls of the blood vessels into engagement with the interior walls **42** of the sleeves **36** and **38**. The walls **32** and **34** of the blood vessels **12** and **14** are then held in a generally cylindrical shape similar to the shape which they normally have when blood is flowing through the blood vessels. In addition, this suction holds the blood vessels against axial movement relative to the positioning assemblies **16** and **18**.

The outwardly flaring ends **20** and **22** of the blood vessels **12** and **14** facilitate positioning and stitching the blood vessels while they are held by the clamp assembly **10**. This outward flaring of the ends **20** and **22** is promoted by the application of suction to the ends through passages or apertures **66** in the walls **48**. Thus, when the positioning assembly **16** circumscribes the blood vessel **12**, the end **20** of the blood vessel **12** is drawn or flared outwardly by suction applied to the blood vessel through the apertures **66** in the end wall **48**. Although only two apertures **66** have been shown in the end wall **48**, it should be understood that the end wall **48** has a generally annular configuration and that there are a series of apertures in the end wall so as to apply suction to the end of the blood vessel **12** in many different areas about the flared end **20**. The sleeve **38** of the positioning assembly **18** promotes a flaring of the end **22** of the blood vessel **14** in much the same manner as previously described in connection with the blood vessel **12**.

To facilitate gripping or engaging the blood vessel with the positioning assemblies **16** and **18**, the sleeves **36** and **38** are movable from an open position, shown in solid lines for the sleeve **36** and FIG. **3**, to a closed position shown in dashed lines in FIG. **3** and solid lines in FIG. **4**. To this end the sleeve **36** includes a first or upper section **70** and a second or lower section **74** which are pivotally interconnected at one end by a hinge assembly **78**. The hinge assembly **78** is supported on one tubular arm **80** of the conduit arrangement **60** and enables the sections **70** and **74** to be pivoted to the open position shown in FIG. **3** in which a relatively large opening or mouth **84** is formed between rubber end portions **86** and **88** of the sections **70** and **74**. The large opening **84** enables the sections to be readily located on opposite sides of a blood vessel. When so located, sections **70** and **74** are moved to the closed position shown in dash lines in FIG. **3** by operating an actuator handle or lever **94** which is pivotally connected to the arm **80** (see FIG. **1**). In the closed position, the rubber end portions **86** and **88** of the sections **70** and **74** are brought into sealing engagement so that the sleeve **36** extends around or circumscribes the blood vessel **12**.

Once the sleeve **36** has been positioned around the blood vessel **12**, the vacuum pump **62** is started and air is drawn through the passages **56** into the manifold **52**. The air then flows through a flexible conduit **96** to a passage **98** in the arm **80** and then to flexible tubing **100** which is connected to the

vacuum pump **62**. This flow of air and the suction applied to the blood vessel **12** is controlled by means of a suitable valve **104** mounted on the arm **80**. As was previously explained, the inward flow of air or suction draws the wall **32** of the blood vessel **12** outwardly into engagement with the interior wall **42** of the sleeve **36** to give the blood vessel **12** a generally cylindrical shape. Also, an inward flow of air through the passage **66** and the end wall **48** tends to pull or bend the end of the blood vessel back into an outwardly flaring position.

The sleeve **38** is generally similar in construction to the sleeve **36** and includes a pair of sections which are pivotally mounted on a second arm **108** of the conduit arrangement **60** by a suitable hinge assembly **109** (FIG. **1**). The sections of the sleeve **38** are pivotal between an open condition shown in FIG. **3** for the sleeve **36**, and a closed condition by operation of an actuator lever or handle **110** corresponding to the actuator lever or handle **94**. The flow of air and the suction applied by the sleeve **38** to the blood vessel **14** is controlled by means of a valve **112** mounted on the arm **108**.

To enable the sleeves **36** and **38** to be positioned in engagement with the end portions of the blood vessels **12** and **14** when they are separated, the arms **80** and **108** are pivotally interconnected at **114**. A spring **116** engages end portions **118** and **120** of the arms **80** and **108** and resiliently presses these end portions of the arms toward each other to space the sleeves **36** and **38** apart to thereby enable the separate end portions of the blood vessels **12** and **14** to be engaged by the clamp assembly **10**. Once the blood vessels **12** and **14** have been engaged in the manner previously explained, the arms **80** and **108** are manually grasped and squeezed toward each other against the influence of the spring **116** to pivot the arms about the connection **114** to the position shown in FIG. **1**. The ends **20** and **22** of the blood vessels are then located in abutting engagement. A suitable latch or clamp **122** is pivotally mounted at **124** on the arm **80** and engages the arm **108** to hold the arms in the position shown in solid lines in FIG. **1** against the urging of the resilient spring **116**. An adjustment screw **126** is mounted on the clamp **122** to enable the relative position of the sleeves **36** and **38** to be adjusted. A suitable aperture is provided in the spring **116** to enable the flexible tubing **100** to pass through the spring.

It is anticipated that the clamp assembly **10** will be used to facilitate the interconnection of blood vessels of different diameters. Accordingly arcuate spacer plates **130** and **132** (FIG. **4**) are provided for use with sleeves **36** and **38** to enable the effective diameter of the interior of the sleeves to be varied in accordance with the size of the blood vessels. The spacer plates **130** and **132** are mounted on the sections **70** and **74** and have passages or apertures **136** which are aligned with corresponding apertures or passages **56** in the sleeves **36** and **38** to connect the interior of the sleeves in fluid communication with the suction manifolds **52**.

Once the ends **20** and **22** of the blood vessels have been positioned as shown in FIGS. **1** and **2** by the clamp assembly **10**, the abutting ends of the blood vessels are stitched or sutured, as is indicated schematically at **24** in FIG. **2**, to interconnect the blood vessels. It is contemplated that this stitching or suturing will be done either manually or by means of a suitable sewing device. The outwardly flaring ends **20** and **22** are held by the clamp assembly **10** so as to be easily accessible to facilitate manual or machine sewing from either or both sides. A machine **144** which is adapted for sewing the ends **20** and **22** of the blood vessels **12** and **14** is illustrated in FIG. **5**. However, it should be understood that many different type of machines or devices can be used in conjunction with the clamp assembly **10** to sew blood vessels and other tubular body elements together. For example, a manually operated sewing machine similar to that disclosed in U.S. Pat. No. 2,928,363 could be used.

The sewing machine **144** is relatively compact and is electrically operable to enable the stitches **24** to be quickly sewn with a minimum of effort. To this end the sewing machine **144** includes solenoid **148** which energizable to move a needle **150** through the ends **20** and **22** of the blood vessels, that is to the left as viewed in FIG. **5**. A rack **154** is moved by the solenoid **148** with the needle **150** to drive a spur gear **156** connected to a hook **158**. The hook **158** operates in a known manner to engage thread **160** extending through an eye of the needle **150** to form a stitch on the reverse stroke of the solenoid. The needle **150** and stitches **24** are positioned relative to the ends **20** and **22** of the blood vessels **12** and **14** by engagement of an end portion **161** of the sewing machine **144** with the sleeves **36** and **38**. The thread **160** is advantageously supplied to the needle **150** from a spool **162** mounted on a casing **164** of the sewing machine **144**. The solenoid **148** is energized by pressing an actuator button **170** connected to leads **174** and **176** from a suitable source of power.

In view of the foregoing description, it can be seen that the clamp assembly **10** facilitates the interconnection of blood vessels and similar tubular elements of the body by applying suction to them to hold them in their normal, generally cylindrical shape with the ends of the blood vessels flaring outwardly. These outwardly flaring ends are positioned in an abutting engagement so that they can be readily interconnected by either manual sewing or by means of a sewing machine, similar to the sewing machine **144** of FIG. **5**. The suction is transmitted to the sleeves **36** and **38** through hollow tubular arms **80** and **108** which also function as a handle to locate the sleeves in a desired relationship relative to the blood vessels when the sleeves are in the open condition illustrated in FIG. **3**. Once the blood vessels have been engaged by the sleeves **36** and **38** and brought together against the influence of the spring **116**, the outwardly flaring ends **20** and **22** are held in engagement and are easily accessible for sewing or suturing.

I claim:

1. A clamp assembly for positioning blood vessels to be interconnected, said clamp assembly comprising first positioning means for engaging one end portion of a blood vessel, said first positioning means including first suction means adapted to apply suction to said one end portion of a blood vessel to thereby hold said one end portion of a blood vessel in a predetermined shape, second positioning means for engaging another end portion of a blood vessel, said second positioning means including second suction means adapted to apply suction to said other end portion of a blood vessel to thereby hold said other end portion to a blood vessel in a predetermined shape generally similar to the shape of said one end portion of a blood vessel, said first and second suction means each including means for applying suction to said end portions in a direction parallel to the longitudinal axis of the blood vessel so that the ends of said end portions flare outwardly in a direction substantially perpendicular to the longitudinal axis of the blood vessel, and support means for supporting said first and second positioning means for relative movement therebetween and locating said first and second positioning means in a relationship relative to each other in which said one end portion of a blood vessel and said other end portion of a blood vessel are adjacently located, said means for locating said first and second positioning means being adapted to retain the flared end portions in abutting engagement disposed substantially perpendicular to the longitudinal axis of the blood vessel to facilitate interconnecting said end portions.

2. A clamp assembly as set forth in claim **1** further including first valve means for controlling the amount of suction applied to said one end portion of a blood vessel by said first suction means and second valve means for controlling the amount of suction applied to said other end portion of a blood vessel by said second suction means to thereby enable the amount of suction applied to each of said end portions to be independently regulated.

3. A clamp assembly as set forth in claim **1** wherein said first and second positioning means each include a sleeve having a generally cylindrical inner wall and an outer wall spaced therefrom to form a manifold having a generally circular cross-sectional configuration with a plurality of passages

formed in said inner wall and extending substantially perpendicular to the longitudinal axis of the blood vessel between said manifold and an interior portion of said sleeve, said manifold being operable to apply suction to an outer surface of an end portion of a blood vessel located in said sleeve to hold a substantial portion of the end portion of the blood vessel in a generally cylindrical shape while said means for applying suction to said end portion in a direction parallel to the longitudinal axis of the blood vessel holds the end of said end portion flared outwardly in a direction substantially perpendicular to the longitudinal axis of the blood vessel.

4. A clamp assembly as defined in claim **3** further including means cooperable with said generally cylindrical inner wall to reduce the cross-sectional area defined by said interior portion of said sleeve and in which a blood vessel is adapted to be held to thereby enable said clamp assembly to be utilized with blood vessels of various diameters.

5. A clamp assembly as set forth in claim **3** wherein said sleeve includes first and second interconnected sections, said sections being relatively movable between an open condition in which ends of said sections are spaced apart to enable the end portion of a blood vessel to be readily positioned between said sections and a closed condition in which the ends of said sections are positioned in engagement to circumscribe the end portion of a blood vessel.

6. A clamp assembly as set forth in claim **5** further including hinge means for pivotally interconnecting said sections and actuator means for selectively operating said sections between said open and closed conditions.

7. A clamp assembly as set forth in claim **6** further including said means mounted on the ends of said sections for sealing a joint between said sections when said sections are in said open condition.

8. A clamp assembly as set forth in claim **1** wherein said means for supporting and locating said first and second positioning means includes fluid conduit means connected at one end to said first positioning means and at another end to said second positioning means, said fluid conduit means being adapted to be connected to a source of low pressure to thereby enable said first and second suction means to apply suction to the end portions of blood vessels.

9. A clamp assembly as set forth in claim **8** wherein said ends of said fluid conduit means are resiliently interconnected and tend to assume a first position, said means for locating said first and second positioning means further including latch means for holding said ends of said fluid conduit means in a predetermined relationship with each other against the influence of said resilient interconnection to thereby retain said one end portion of a blood vessel in engagement with another end portion of a blood vessel.

10. A clamp assembly for positioning blood vessels to be interconnected, said clamp assembly comprising first positioning means for engaging one end portion of the blood vessel and applying suction thereto to thereby hold said one end portion of a blood vessel in a predetermined shape, second positioning means for engaging another end portion of a blood vessel and applying suction thereto to thereby hold said other end portion of a blood vessel in a predetermined shape generally similar to the shape of said one end portion of the blood vessel, and means for locating said first and second positioning means in a relationship relative to each other in which said one end portion of the blood vessel and said other end portion of a blood vessel are adjacent to thereby facilitate interconnecting said end portions, said first positioning means including means for applying suction to said one end portion of the blood vessel in such a manner as to tend to flare said one end portion outwardly, said second positioning means including means for applying suction to said other end portion of a blood vessel in such a manner as to tend to flare said other end portion outwardly, said means for locating said first and second positioning means being adapted to retain the flared end portions in abutting engagement, said first and second positioning means each including a sleeve having a generally cylindrical inner wall and an outer wall spaced therefrom to form a manifold having a generally circular cross-sectional configuration with a plurality of passages formed in said inner wall and extending between said manifold and an interior portion of said sleeve, said manifold being adapted to be connected to a source of low pressure to thereby apply suction to an outer surface of an end portion of a blood vessel located in said sleeve to hold the end portion of the blood vessel in a generally cylindrical shape.

11. A clamp assembly for positioning blood vessels to be interconnected, said clamp assembly comprising first positioning means for engaging one end portion of a blood vessel and applying suction thereto to thereby hold said one end portion of a blood vessel in a predetermined shape, second positioning means for engaging another end portion of a blood vessel and applying suction thereto to thereby hold said other end portion of a blood vessel in a predetermined shape generally similar to the shape of said one end portion of a blood vessel, and means for locating said first and second positioning means in a relationship relative to each other in which said one end portion of a blood vessel and said other end portion of a blood vessel are adjacent to thereby facilitate interconnecting said end portions, said first and second positioning means each including a sleeve having a generally cylindrical inner wall and an outer wall spaced therefrom to form a manifold having a generally circular cross-sectional configuration with a plurality of passages formed in said inner wall and extending between said manifold and an interior portion of said sleeve, said manifold being adapted to be connected to a source of low pressure to thereby apply suction to an outer surface of an end portion of a blood vessel located in said sleeve to hold the end portion of the blood vessel in a generally cylindrical shape, said sleeve having an end wall interconnecting said inner and outer walls, said end wall having a plurality of passages therein connected in fluid communication with said manifold for applying suction to the end portion of a blood vessel in such a manner as to tend to flare the end portion of a blood vessel outwardly.