June 13, 1944. C. K. HUTHSING 2,351,430

NOZZLE CONSTRUCTION

Filed Dec. 28, 1942

Fig. 1.

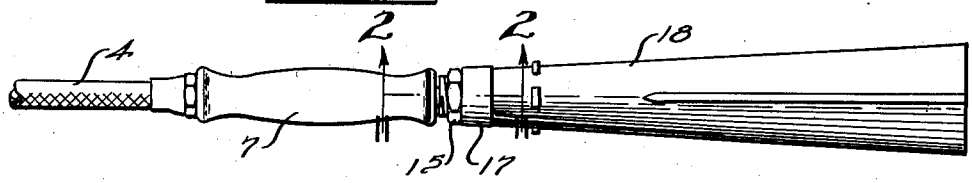

Fig. 2.

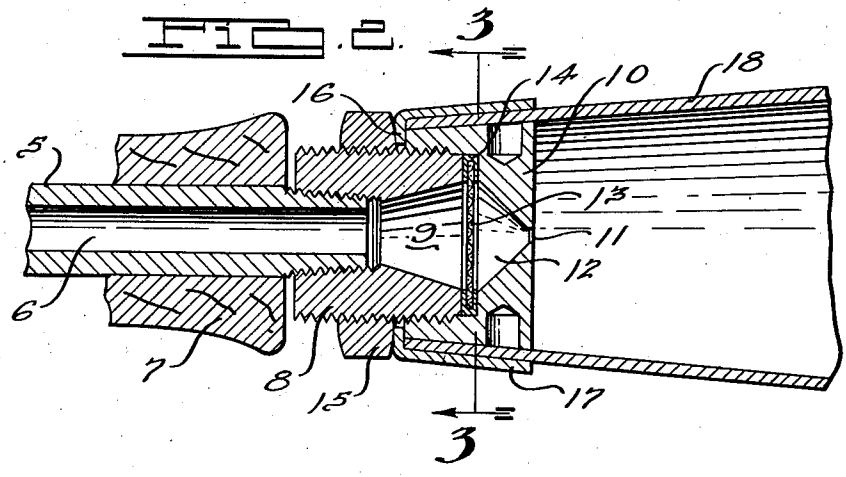

Fig. 3.

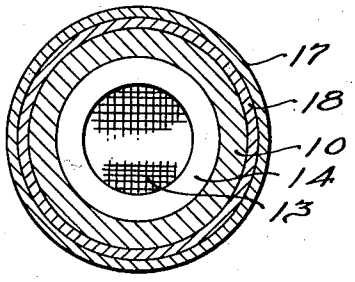

INVENTOR
Charles K. Huthsing.
BY
Harness, Dickey & Pierce.
ATTORNEYS.

Patented June 13, 1944 2,351,430

UNITED STATES PATENT OFFICE

2,351,430

NOZZLE CONSTRUCTION

Charles K. Huthsing, Grosse Pointe Farms, Mich.

Application December 28, 1942, Serial No. 470,325

5 Claims. (Cl. 169—11)

This invention relates to a construction of discharge nozzle for fire extinguishers which dispense carbon dioxide or the like.

The main objects of this invention are to provide a discharge nozzle for dispensing fluids, such as carbon dioxide gas, at high pressures and which will not freeze up, thereby permitting the full and complete discharge of the gas from its container; and to provide a discharge nozzle which is of simple construction and economical to manufacture.

An illustrative embodiment of this invention is shown in the accompanying drawing in which;

Figure 1 is a view in elevation of the discharge nozzle, handle and horn used in conjunction therewith;

Fig. 2 is an enlarged sectional view taken on the line 2—2 of Fig. 1, looking in the direction indicated by the arrows; and

Fig. 3 is a sectional view taken on the line 3—3 of Fig. 2, looking in the direction indicated by the arrows.

Heretofore it has been the general impression in the trade and among designing engineers of carbon dioxide fire extinguishers that it is necessary to insulate the metal or material adjacent the discharge orifice from the stream of carbon dioxide gas as it issues from that orifice, in order to prevent a freezing up of the nozzle which would stop its complete discharge. Extremely low temperatures are encountered when discharging carbon dioxide gas through an orifice under high pressure and one of the desirable characteristics of a successful fire extinguisher of this character is that a discharge nozzle be constructed so as not to freeze up when discharging at temperatures such as —40° F.

In one of the most widely used fire extinguishers now on the market, the freezing up of the discharge orifice is intended to be prevented by extending the material or metal surrounding the discharge orifice in the form of a frusto-cone so that radial expansion of the gas as it leaves the orifice does not sweep against the axial face of the nozzle. Such construction is supposed to provide an insulating layer of air between the axial face of the nozzle and the gas as it flows axially by expansion upon issuance from the orifice.

As a result of extensive experimentation it has been definitely demonstrated that none of the existing prior art nozzles are free from the objection of freezing up and thereby retarding or stopping the flow of gas. When discharge takes place under certain frigid conditions which are now frequently met with, such as in the flying of airplanes at altitudes of from 30,000 to 45,000 ft., it has been found that a pencil or cone of ice and snow forms inside of the discharge nozzle, built up back of the strainer or on the wire mesh, which is usually provided inside of the nozzle and through which the gas must pass before issuing from the discharge orifice. This pencil of ice and snow tends to shut off or partially shut off the flow of gas when the container pressure has been reduced to a relatively low point and does interfere with the complete discharge of the gas from the container.

In the present construction, the nozzle, directly back of the discharge orifice, is provided with a chamber in which a certain amount of expansion of the gas takes place and which provides room for the mounting of a wire mesh screen of relatively large area. The provision of this chamber not only permits some expansion of the gas therein, but also lessens the velocity and creates turbulence and although the precise functioning of this construction of nozzle is not definitely known, it has been conclusively proved by a large number of experiments, under various frigid conditions, that the present nozzle will not freeze up or stop the discharge of the gas even when the pressure in the container has been reduced to a relatively low point as at the time when the container has about emptied itself of its charge and the temperature has reached the lowest point.

In other words, the present nozzle will permit the free and complete discharge of all of the gas from a CO_2 container without the formation of any ice or snow within the nozzle under the same conditions that existing nozzles now on the market will freeze up and have pencils or cones of snow and ice formed within the nozzle.

In the construction shown in the drawing the usual flexible high pressure discharge hose 4 is connected to a short length of metal pipe or nipple 5 having substantially the same diameter of interior bore 6 as has the hose 4. A handle 7, of wood or some similar insulating material, is snugly fitted over the nipple 5 and is adapted to be grasped by the hand of the user for directing the apparatus when in use.

The end of the pipe nipple 5, opposite to that which is attached to the hose 4, is exteriorly threaded to receive one end of an interiorly threaded coupling member 8. The other end of the coupling member 8 is provided with a frusto-conical bore 9, the walls of which diverge outwardly from the end of the nipple 5 and thereby provide an expansion and turbulence chamber.

The coupling member 8 is exteriorly threaded to receive a nozzle body member 10 of circular cross-section, which is provided with an axially positioned discharge orifice 11 and a frusto-conical bore 12, the walls of which diverge inwardly from the orifice 11, and which has a maximum diameter substantially equal to the maximum diameter of the frusto-conical shaped chamber 9. The coupling member 8 and the body member 10 are hereafter sometimes referred to collectively as the discharge nozzle.

A circular wire mesh screen 13, having a gasket 14 of U-shaped cross-section, spun over its peripheral edge is interposed between the chambers 9 and 12. The peripheral edge, which is embraced by the gasket 14, is arranged in position so as to be clamped between complementary annular faces of the nozzle body 10 and coupling 8, so as to seal the joint between the two parts and at the same time hold the screen stretched snugly across the expansion and turbulence chamber formed by the frusto-conical bores 9 and 12.

The threaded exterior of the coupling member 8 is also provided with a nut 15, threaded thereon, which abuts against and clamps an inturned radial flange 16 of a metal ferrule 17. The ferrule 17 surrounds the small end of a tapered horn 18, through which the carbon dioxide gas is discharged and directed toward the fire or flame to be extinguished. The end of the horn is embraced between the ferrule 17, which surrounds the outer side thereof and the exterior wall of the nozzle body member 10, which is tapered to fit the inner surface of the horn. The flange 16 of the ferrule abuts against the radial face of the threaded portion of the nozzle member 10 and is held snugly thereagainst by the nut 15.

In the operation of this discharge nozzle, the valve on the CO_2 container is opened admitting gas through the flexible hose 4 to the bore 6 of the pipe nipple 5 and thence into the expansion and turbulence chamber formed by the bores 9 and 12, the gas passing through the wire mesh screen 13, which is of relatively larger diameter than the diameter of the bore 6.

While it is not fully and definitely understood just what action takes place within this expansion and turbulence chamber, nevertheless, it has been conclusively demonstrated by experimentation that a container filled with CO_2 gas at pressures of approximately 900 lbs. per square inch, may be fully and completely emptied through this discharge nozzle without formation of any pencil or cone of ice or snow being formed on or adjacent to the screen 13, when discharged under conditions which would cause the formation of such a pencil of ice and snow in the nozzles of the existing commercial carbon dioxide fire extinguishers.

I claim:

1. A discharge nozzle for discharging carbon-dioxide fluid at high pressure, comprising a nozzle body having an inlet at one side and a single discharge orifice at the other side of smaller dimension than the inlet, and a chamber therebetween, the chamber being composed of two frusto-conical sections, one leading from the inlet with its small end toward said inlet and the other leading toward said orifice with its small end toward said orifice and a screen transversely positioned between said sections.

2. A discharge nozzle for discharging carbon-dioxide fluid at high pressure, comprising a nozzle body having an inlet at one side and a single discharge orifice at the other side of smaller dimension than the inlet, and a chamber therebetween, the chamber having a continuously increasing cross section from the inlet toward a mid-portion, and then a continuously decreasing cross section toward the orifice, and a screen positioned transversely of said chamber at said mid-portion.

3. A discharge nozzle for discharging carbon-dioxide fluid at high pressure, comprising a nozzle body having an inlet at one side and a single orifice at the other side of smaller dimension than the inlet, the body being formed in two separable sections, one section having a frusto-conical chamber with its small end toward said inlet and the other section having a frusto-conical chamber with its small end toward said orifice, a screen transversely positioned between said sections, and coupling means uniting said sections.

4. A discharge nozzle for discharging carbon dioxide fluid at high pressure, comprising a nozzle body having an inlet at one side and a single discharge orifice at the other side of smaller dimension than the inlet, and a chamber therebetween of materially greater cross section than the inlet, and a screen positioned transversely across said chamber whereby a substantial portion of the screen may be closed by solidified carbon dioxide without impeding the flow from the inlet to the outlet.

5. A discharge nozzle for the discharge of fluid at high pressure comprising a nozzle body member having a discharge orifice and a frusto-conical shaped chamber positioned with its smaller end communicating with said discharge orifice, said body member having an annular, interiorly threaded, skirt portion, an annular seat formed in said body portion at the inner end of said skirt portion and extending radially from the larger diameter end of said frusto-conical shaped chamber, a disc shaped screen adapted to be received on said seat, a gasket of U-shape cross-section embracing the marginal edge of said screen, an exteriorly threaded coupling member shaped and adapted to be screwed into said skirt portion and having an inner end adapted to engage said gasket for supporting said screen and sealing the joint between said members, said coupling member having an interiorly threaded inlet opening and having a frusto-conical shaped chamber in axial alignment with said opening with the walls thereof diverging toward said screen, the larger diameter of said coupling member chamber being substantially the same as the larger diameter of said body member chamber, the exterior surface of said nozzle body member being frusto-conical to receive and conform to the shape of the interior surface of a tapered discharge horn adapted to be mounted thereon.

CHARLES K. HUTHSING.