June 30, 1959 J. C. NYGARD 2,892,958

CORRUGATED WAVEGUIDE

Original Filed March 15, 1955

FIG. 1

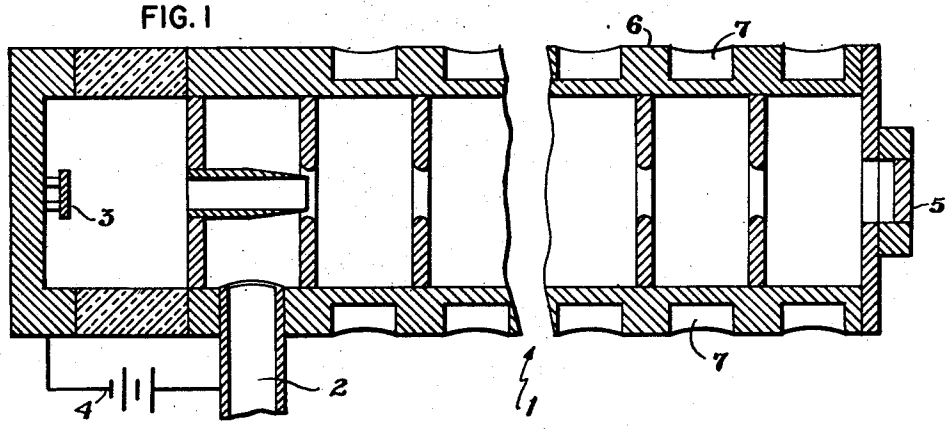

FIG. 2

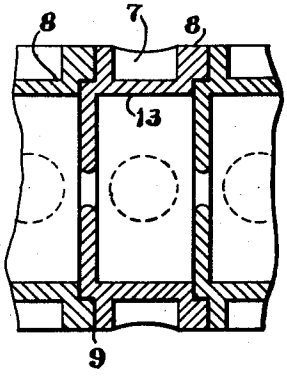

FIG. 3

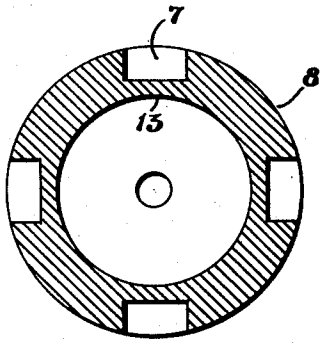

FIG. 4

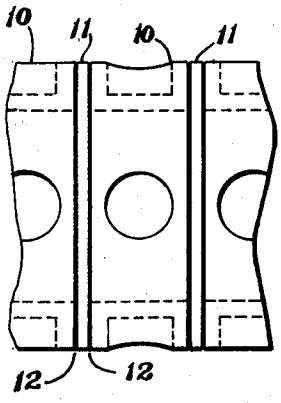

FIG. 5

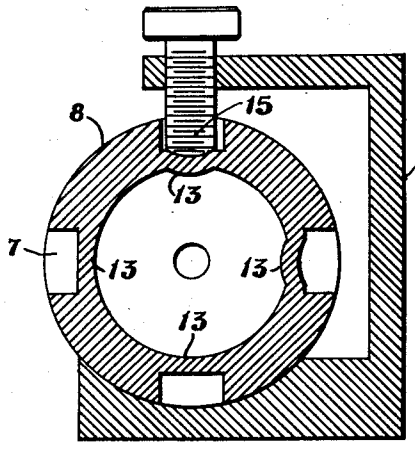

United States Patent Office 2,892,958 Patented June 30, 1959

2,892,958

CORRUGATED WAVEGUIDE

John C. Nygard, Lexington, Mass., assignor to High Voltage Engineering Corporation, Cambridge, Mass., a corporation of Massachusetts

Continuation of application Serial No. 494,309, March 15, 1955. This application July 13, 1956, Serial No. 597,723

1 Claim. (Cl. 315—5.42)

The application is a continuation of my co-pending application, Serial Number 494,309, filed March 15, 1955 for Resonant Cavity and Method of Tuning the Same, now abandoned.

This invention relates to microwave linear accelerators, and in particular to a corrugated or iris-loaded waveguide for a traveling-wave electron linear accelerator, which corrugated waveguide is especially adapted for adjustment of the phase velocity of the traveling wave therein.

In a traveling-wave electron linear accelerator, electrons are accelerated by means of an electromagnetic wave which travels along the length of a corrugated or iris-loaded waveguide. The wave is caused to take such a form and to have such a phase velocity that the electrons to be accelerated are always in phase with the wave and always in an accelerating electric field throughout the length of the guide. It is therefore evident that accurate adjustment of the phase velocity of the wave is of paramount importance in microwave linear accelerators. In general, the electrons travel at very nearly the velocity of light for most of the length of the guide, so that the electrons gain energy with a negligible increase in velocity. Hence the phase velocity of the wave, in general, should be approximately equal to the velocity of light in vacuo, designated herein by the symbol *c*, throughout the length of the guide.

The usual accelerating waveguide is circular in cross-section, and the phase velocity of the wave produced therein is slowed down to the desired value of *c* by providing apertured discs at regular intervals along the guide.

A particularly critical dimension is the inside diameter of the tubular portion of the waveguide since the phase velocity of the traveling wave depends upon this dimension. Other characteristics of the traveling wave are not appreciably affected by the slight variations in this dimension with which the invention is concerned. However, the effect of even a slight error in phase velocity of the wave is to reduce the efficiency of the conversion of R-F power into electron-beam power.

As a result, it has been necessary to machine the inner surface of the tubular portion of the waveguide to very close tolerances, and the precautions which must be taken in order to achieve this result are elaborate and costly. Thus, in the construction of the linear accelerator described in the report entitled, "A High Energy Linear Electron Accelerator," by Richard B. Neal (Microwave Laboratory Report No. 185, February 1953, Stanford University), the corrugated waveguide is made up of units which are made by shrinking a series of apertured discs into a length of copper tubing. The critical dimension hereinbefore referred to is the inner diameter of the copper tubing. Copper tubing having an inner diameter of 3 3/16 inches is bored in five successive cuts to successive inside diameters of 3.206 inches, 3.226 inches, 3.240 inches, and 3.246 inches, the entire boring operation requiring about five hours per unit. The tubing is then honed in three steps. First, the inside diameter is honed

with a coarse stone, using kerosene to .0006 inch under the final diameter of 3.247 inches. Then, a medium stone and oil are used to hone the tube to .00025 inch under the final diameter. Finally, a fine stone and kerosene are used to hone the tube to a diameter of .00005 inch to .0001 inch under the nominal diameter of 3.247 inches. The complete honing procedure requires about 3½ hours. (See pages 33–35 of the Stanford report hereinbefore referred to.)

One object of my invention is to avoid the necessity for machining the inside diameter of the waveguide to such close tolerances.

In accordance with my invention, one or more sockets are bored in the outer circumference of the corrugated waveguide to a depth less than the thickness of the wall of the corrugated waveguide, so as to provide one or more relatively thin areas in the waveguide wall. After the corrugated waveguide has been machined to moderately close tolerances, the phase velocity of the traveling wave therein may be adjusted, in accordance with the invention, by inserting a tool into one or more of the sockets so as to deform the corresponding thin areas in the wall of the corrugated waveguide. In this manner the cavity properties are adjustable over a range after the cavity has been machined, so that the machining need be done only to moderate tolerances, thereby saving much time and expense in the manufacture of the corrugated waveguide.

The invention may best be understood from the following detailed description, with reference to the accompanying drawings, in which:

Fig. 1 is a longitudinal, central section, with an intermediate part broken away, taken through the corrugated waveguide, embodying my invention, of a microwave linear accelerator, and wherein said waveguide is constructed by shrinking a series of apertured discs into a length of copper tubing;

Fig. 2 is a cross-sectional view of a portion of a waveguide similar to that of Fig. 1, except that the waveguide of Fig. 2 is made up of a series of cups;

Fig. 3 is a cross-sectional view along the line 3—3 of Fig. 2;

Fig. 4 is a side elevation of a portion of a waveguide similar to that of Fig. 2, except that the waveguide of Fig. 4 is made up of a series of cylinders alternating with a series of apertured discs; and

Fig. 5 is a cross-sectional view similar to that of Fig. 3 and shows how the phase velocity of the traveling wave may be adjusted in accordance with my invention.

Referring to the drawings, and first to Fig. 1 thereof, therein are shown such portions of a representative microwave linear accelerator as are necessary to an understanding of my invention. R-F power is fed into a corrugated waveguide **1** from a suitable power source (not shown) through a transmission line **2**, the apparatus being designed to produce an electromagnetic wave in the corrugated waveguide **1** which has an axial electric field and which travels from left to right with a phase velocity *c*. Electrons emitted at a cathode **3** are accelerated by means of a voltage source **4** and injected into the waveguide **1** with a velocity nearly equal to *c*. Electrons arriving in the waveguide **1** in phase with the wave are accelerated to high energy and then utilized in the desired manner. In the apparatus of Fig. 1, the high-energy electrons strike a target **5** of a high-atomic numbered metal, such as lead, so as to produce X-rays.

The waveguide **1** is manufactured in the manner hereinbefore described with reference to the Stanford report, except that the tubing **6** need be machined to only moderate tolerances. By way of example, the inner surface of the tubing may be machined to a tolerance of about ±.005 inch, instead of the close tolerance of ±.00001

inch formerly required. A series of groups of sockets **7** are bored in the outer surface of the tubing **6** at spaced intervals along the waveguide **1**, each group containing a suitable number, such as four, of sockets **7**. The sockets **7** are bored to a depth such that the thin area of the tubing **6** which is thus produced is still thick enough to support the vacuum which exists within the waveguide **1**. For example, assuming that the input R-F power has a 10 cm. wavelength, the tubing **6** may be composed of oxygen-free high-conductivity copper having an inside diameter of about 3 inches and a wall thickness of about ½ inch, and the depth of each socket **7** might be about ⅜ inch.

Alternatively, the corrugated waveguide **1** may be made up of a series of cups **8**, as shown in Fig. 2. The cups **8** may be made from copper strip by cold pressing, each cup **8** being then machined to the form shown in Fig. 2. The cups **8** are soldered together, as at **9**, and the sockets **7** may be bored therein in a manner similar to that employed for boring the sockets **7** in the tubing **6** of Fig. 1.

The sockets **7** are shown perhaps more clearly in Fig. 3. While Fig. 3 is a cross-section view along the line **3—3** of Fig. 2, a cross-sectional view taken transversely across the waveguide **1** of Fig. 1 and centrally through the sockets **7** would be practically identical in appearance to Fig. 3.

As a still further alternative, the corrugated waveguide **1** may be made up of a series of cylinders **10** alternating with a series of apertured discs **11** to which the cylinders are soldered as at **12**. Still other constructions of corrugated waveguides are possible, and my invention is not limited to the types of corrugated waveguides specifically shown herein.

In any event, the inner surfaces of the corrugated waveguide are machined to moderate tolerances, such as ±.005 inch, the final adjustment being then made by deforming the thin areas **13** which lie at the bottom of the sockets **7**. By slightly deforming the thin areas **13**, the phase velocity of the traveling wave is adjusted over a range, while the resistive losses and other characteristics of the corrugated waveguide are not appreciably affected, since only a negligible increase in surface area (and hence only a negligible increase in electrical resistance) results from the deformation.

In general, it will be simpler to deform the thin areas **13** by pressing them inward with a suitable tool, as shown in Fig. 5, rather than by pressing them outward. Referring to said Fig. 5, one of the cups **8** of Fig. 2 is held in a vise **14** which has a bolt **15** to engage one of the sockets **7**. Tightening the bolt **15** deforms the thin area **13** as shown in Fig. 5, wherein the bolt **15** is deforming one thin area **13** and wherein one of the other three thin areas **13** has already been deformed.

The effect of the deformation shown in Fig. 5 is to increase the phase velocity of the electron-accelerating wave traveling therethrough; and, since the thin areas **13** retain their deformation, it is obvious that they cannot be restored to their original state. Hence, the cup **8** or other resonant cavity must be machined to an inside diameter greater than the final inside diameter, and the final adjustment with the vise **14** and bolt **15**, or other tool, must be very carefully made so as not to produce excessive deformation.

Of course, if the thin areas **13** are deformed by pressing them outward, the effect of the deformation would be to decrease the phase velocity of the electron-accelerating wave traveling therethrough; and the cup **8** or other resonant cavity would have to be machined to an inside diameter less than the final inside diameter.

Having thus described a corrugated waveguide embodying my invention, together with the method of tuning the same in accordance with my invention, it is to be understood that although specific terms are employed, they are used in a generic and descriptive sense, and not for the purposes of limitation, the scope of the invention being set forth in the following claim.

I claim:

A microwave electron linear accelerator comprising in combination: a corrugated waveguide, means for injecting electrons into said corrugated waveguide along the axis thereof, and means for exciting a traveling electromagnetic wave in said corrugated waveguide, said corrugated waveguide comprising a tubular member, a plurality of axial apertured disks which divide the space within the tubular member into a plurality of partitioned spaces, the portion of said tubular member corresponding to each partitioned space having a restricted area which is substantially thinner than the remaining area of said portion and which is deformable, whereby the volume of each partitioned space is adjustable to provide variation in the phase relationship of said wave to said electrons.

References Cited in the file of this patent

UNITED STATES PATENTS

2,367,295	Llewellyn	Jan. 16, 1945
2,403,782	Blumlein	July 9, 1946
2,408,235	Spencer	Sept. 24, 1946
2,606,302	Learned	Aug. 5, 1952
2,653,270	Kompfner	Sept. 22, 1953
2,653,271	Woodyard	Sept. 22, 1953
2,810,855	Miller et al.	Oct. 22, 1957
2,813,996	Chodorow	Nov. 19, 1957
2,825,841	Convert	Mar. 4, 1958