June 20, 1950 C. J. COOK 2,512,417

BRACKET FOR BASKETBALL GOALS

Filed Aug. 1, 1949

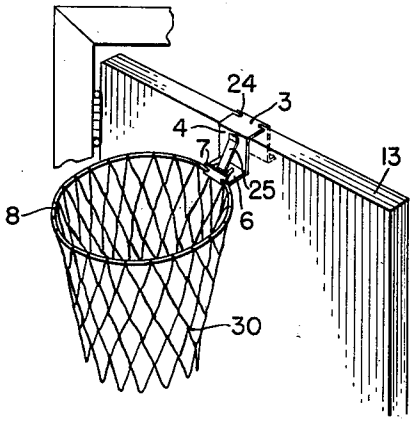


FIG. 1

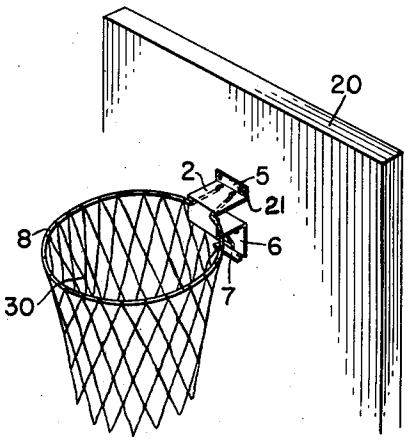


FIG. 2

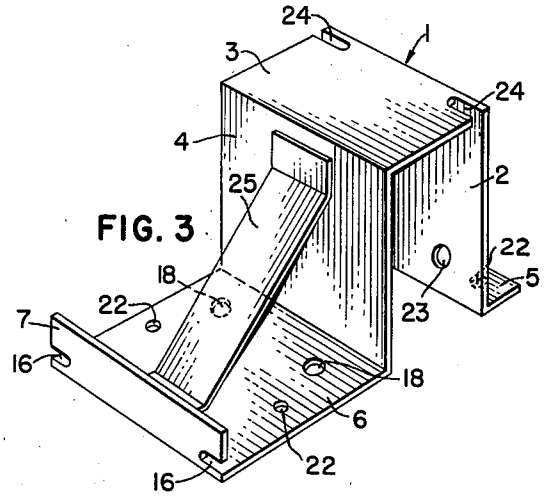


FIG. 3

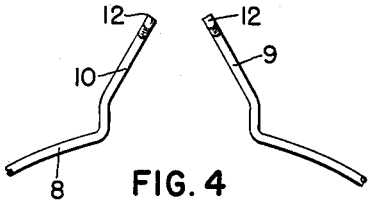


FIG. 4

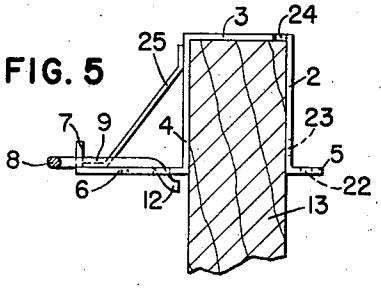


FIG. 5

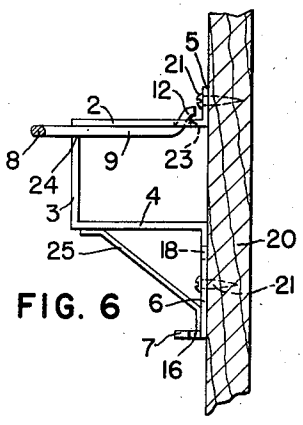


FIG. 6

INVENTOR.
CHARLES J. COOK

BY

Gordon C. Mack

ATTORNEY

Patented June 20, 1950

2,512,417

# UNITED STATES PATENT OFFICE

2,512,417

## BRACKET FOR BASKETBALL GOALS

Charles J. Cook, East Greenville, Pa., assignor to R. I. Polite, doing business as Dexter-Wayne Company, Lansdale, Pa.

Application August 1, 1949, Serial No. 107,949

2 Claims. (Cl. 248—315)

1

This invention relates to a mounting bracket for a basketball goal.

There are two basic designs for the mounting brackets for basketball goals which are now in use. The most common design of bracket is adapted to be permanently fastened against a backboard. The other is provided with means for clipping it over the top edge of a door or the like. If not screwed to the door, the goal installation is only temporary and may be easily removed when not in use. The goal of this invention includes a bracket which may be installed in either of the above two ways.

In making a permanent installation of the bracket of this invention, it is securely fastened against a backboard. It is provided with a channel which may be clipped over the top edge of a door for a temporary installation. With the latter installation the wall above the door frame may serve as a rebound surface. In the goal of this invention, the hoop is detachable from the bracket. It will be supported by the bracket in a horizontal plane regardless of the position in which the bracket is installed.

This goal is easily and inexpensively manufactured. It consists only of the hoop and bracket, and the net which is supported by the hoop. It is preferably of a light-weight construction and is intended to be used by boys around a playground or in a home. For home use the removable installation is desirable since the goal may be supported by clipping it over a garage door, for example, and then removing it after the game is finished.

The goal will be further described with reference to the drawings, in which—

Fig. 1 is a perspective view of the goal when clipped over the top of a door;

Fig. 2 is a perspective view of the goal when rigidly fastened against a backboard;

Fig. 3 is a perspective view of the novel mounting bracket;

Fig. 4 is a detail of a plan view of the end portions of the hoop which are engaged with the mounting bracket;

Fig. 5 is an enlarged side elevation of the assembly of Fig. 1; and

Fig. 6 is an enlarged side elevation of a portion of the assembly of Fig. 2.

Bracket 1 is best shown in Fig. 3. It is formed of a narrow plate of thin gauge sheet metal which may be easily stamped or bent to shape. The shaping operation forms a channel in the plate which extends laterally across it and is closer to one end than the other. The walls of this channel are joined at right angles to one another and

2

they are designated as bracket sections 2, 3, and 4 respectively. Sections 5 and 6 lie in the same plane and are substantially perpendicular to sections 2 and 4 of the channel, respectively. Section 6 is longer than section 5. The outer end of section 6 is bent at right angles to form the narrow flange 7.

The hoop 8 of the goal may be formed by bending a stiff wire to shape. The end portions 9 and 10 of the wire forming the hoop 8 are bent outwardly from the hoop in the plane of the circular portion as shown in Fig. 4. They are bent toward one another so that when placed flat against a surface of the bracket they will resist twisting of the hoop when hit from above or below. At the outermost end of each, a hook 12 is formed by offsetting each end portion 9 and 10 a distance about equal to the thickness of the wire and the metal of the bracket, leaving the outermost ends of the hooks 12 parallel to the plane of the balance of the hoop.

The ends of the hoop are engageable with different sections of the brackets depending on the position in which the bracket is installed. The hoop is preferably made of steel with sufficient resiliency to allow end portions 9 and 10 to be sprung into supporting means on the bracket 1 and be rigidly supported thereby. The hoop is rigid enough, however, to retain its circular shape while the goal is in use.

Sections 2, 3, and 4 of bracket 1 form a channel which is adapted to be clipped over the edge of a door 13 in the manner shown in Figs. 1 and 5. Bracket 1 is easily installed in this position and the goal will be rigidly held thereby. Section 6 protrudes outwardly from door 13 when the bracket 1 is so installed and is adapted to supply the support for hoop 8. There is an indentation 16 in each edge of flange 7, and the bottom edge of each indentation is preferably flush with the top surface of section 6. This holds the end portions 9 and 10 of the hoop against this section and adds rigidity to the hoop, preventing it from twisting when struck from above or below. There are also two holes 18 through section 6 near the line where it joins with section 4. To engage hoop 8 with the bracket when in the position shown in Figs 1 and 5, the hooks 12 are inserted into holes 18 and portions 9 and 10 of hoop 8 are sprung into indentations 16 in the edges of flange 7. It is noted that in this assembly (Fig. 5) the end portions 9 and 10 lie flush against the top surface of section 6 and the hooks 12 are directed downwardly. There is enough tension on the end portions 9 and 10 to press them

tightly enough into the indentations 16 to prevent lateral shifting of the hoop when hit by balls. Placing the wires in indentations 16 prevents any vertical swinging of the hoop.

The goal may be mounted as a permanent installation by fastening the bracket 1 to a backboard 20 in the manner shown in Figs. 2 and 6. Here, sections 5 and 6 of the bracket 1 are fastened flat against backboard 20 by screws 21 fastened in holes 22 at opposite ends of section 5 and in section 6. Section 6 extends downwardly in this installation and the channeled portion consisting of sections 2, 3 and 4 of bracket 1 protrudes outwardly to serve as support for hoop 8. The hoop is engaged with the channeled portion similarly to the manner in which it was engaged with sections 6. The hooks 12 are inserted into holes 23 in section 2, and the portions 9 and 10 are then sprung into indentations 24 which are cut into the edges of section 3, with the upper edge flush with the inner surface of section 2 to hold the arms 9 and 10 flat against the under surface of section 2 so that they will resist twisting. The grip of the hoop against the opposite sides of section 3 prevents lateral movement, and indentations 24 hold the portions 9 and 10 of the hoop and prevent the hoop from swinging vertically. Fig. 6 shows that in this assembly, hooks 12 are directed upwardly through holes 23 and the end portions 9 and 10 are held flat against the inner surface of section 2.

In a preferred form of the invention the mounting bracket is made of relatively light gauge sheet metal, and is stiffened by the brace 25 which is spot-welded to the outer surfaces of sections 4 and 6.

A net 30 is slipped around hoop 8 while it is disconnected from bracket 1.

What I claim is:

1. A mounting bracket for a basketball goal formed from a single piece of sheet metal which includes a narrow rear and wider front section joined by a channel which rises upwardly therefrom and is formed of a rear and front wall and top, the rear and front wall being parallel and the top being perpendicular to the rear and front walls and being joined thereto by sharp right angles, and a flange at the front edge of the front section, the undersurface of the front and rear sections being flat, holes in the rear and front sections for fastening the bracket to a support, two pairs of holes and two pairs of indentations to support a hoop in either of two positions, the first pair of holes being symmetrically located near the base of the rear wall of the channel with the first pair of indentations in the edges of the top of the channel near the rear wall, the second pair of holes being symmetrically located near the rear edge of the front section and the second pair of indentations being located in the edges of the flange, the spacings of the holes and indentations of the first pair being the same as those of the second pair.

2. The mounting bracket of claim 1 in which the rear edge of each of the first pair of indentations is flush with the front surface of the rear wall, the bottom edge of each of the second pair of indentations is flush with the upper surface of the front section, and the structure is stiffened by a brace the ends of which are fastened to the upper surface of the front section and the front face of the front wall.

CHARLES J. COOK.




REFERENCES CITED

The following references are of record in the file of this patent:

UNITED STATES PATENTS

| Number | Name | Date |
|---|---|---|
| 451,715 | Rockhill | May 5, 1891 |
| 809,441 | Hanks | Jan. 9, 1906 |
| 1,915,958 | Skirrow | June 27, 1933 |
| 1,930,673 | Consolazio | Oct. 17, 1933 |
| 2,085,206 | Holmdahl | June 29, 1937 |
| 2,225,329 | Barnes | Dec. 17, 1940 |