A. GOTTSCHALK.

FLUID PRESSURE DOOR OPERATING DEVICE.

APPLICATION FILED JULY 20, 1911.

1,134,608.

Patented Apr. 6, 1915.

4 SHEETS—SHEET 1.

-FIG. 1.-

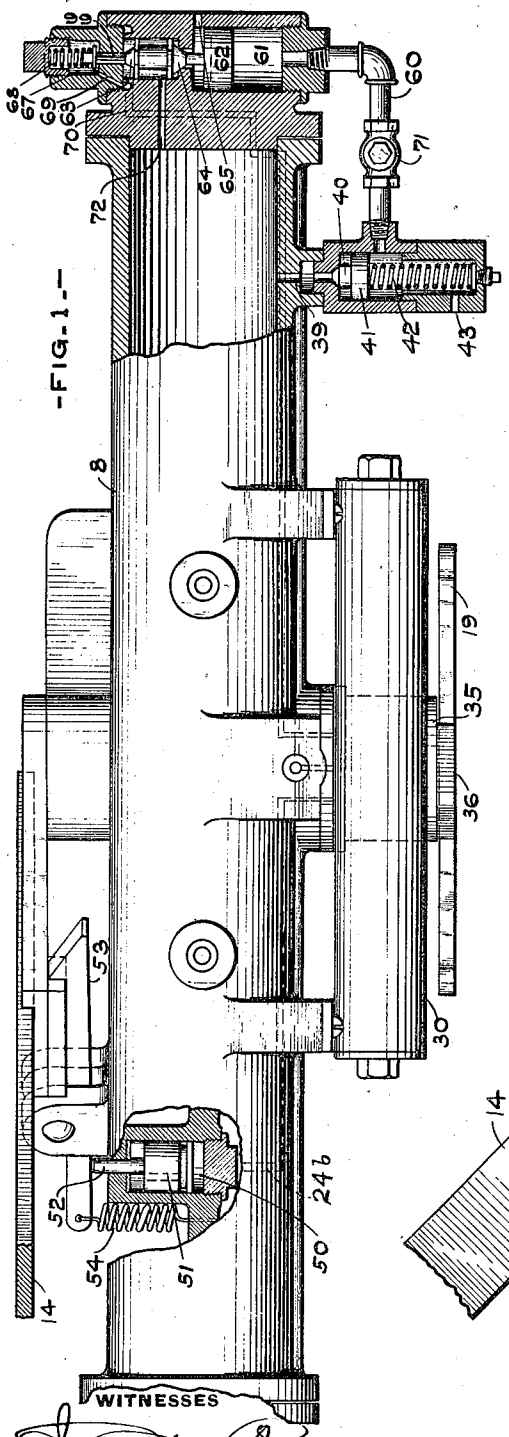

-FIG. 2.-

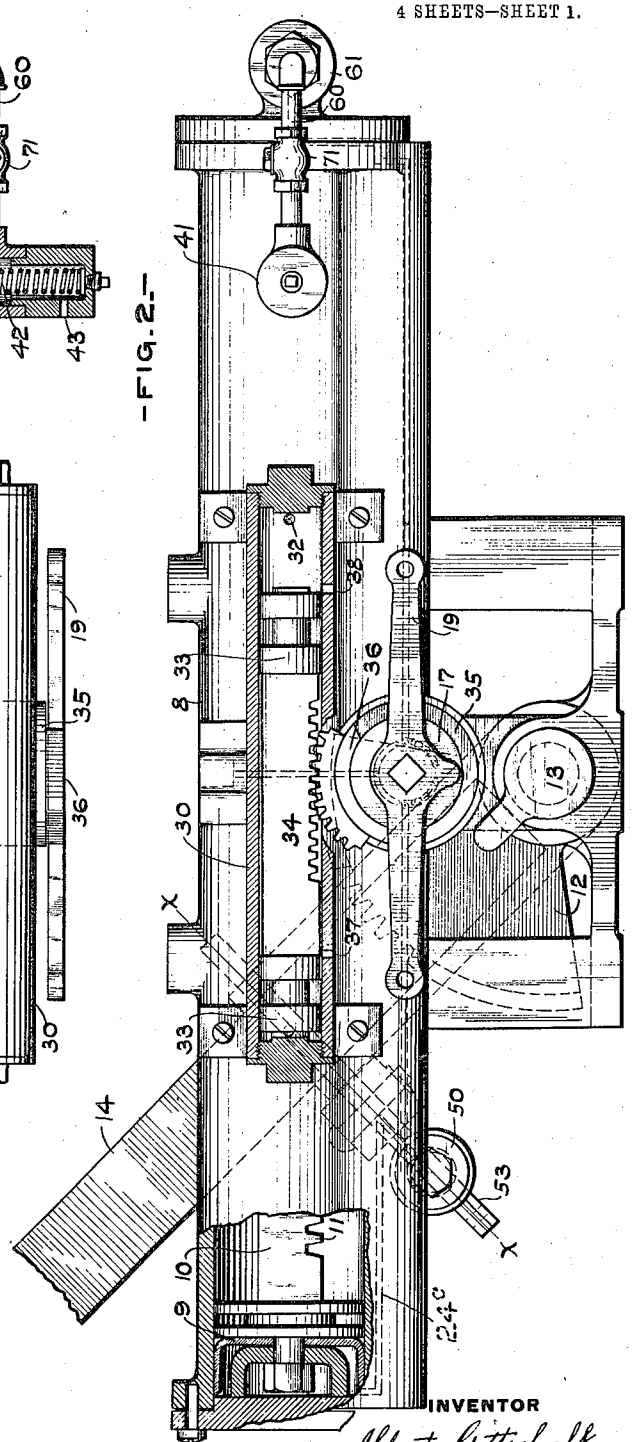

WITNESSES

A. S. Fowler.

INVENTOR

Albert Gottschalk

by Edward A. Wright

Atty.

A. GOTTSCHALK.

FLUID PRESSURE DOOR OPERATING DEVICE.

APPLICATION FILED JULY 20, 1911.

1,134,608. Patented Apr. 6, 1915.

4 SHEETS—SHEET 2.

-FIG. 3.-

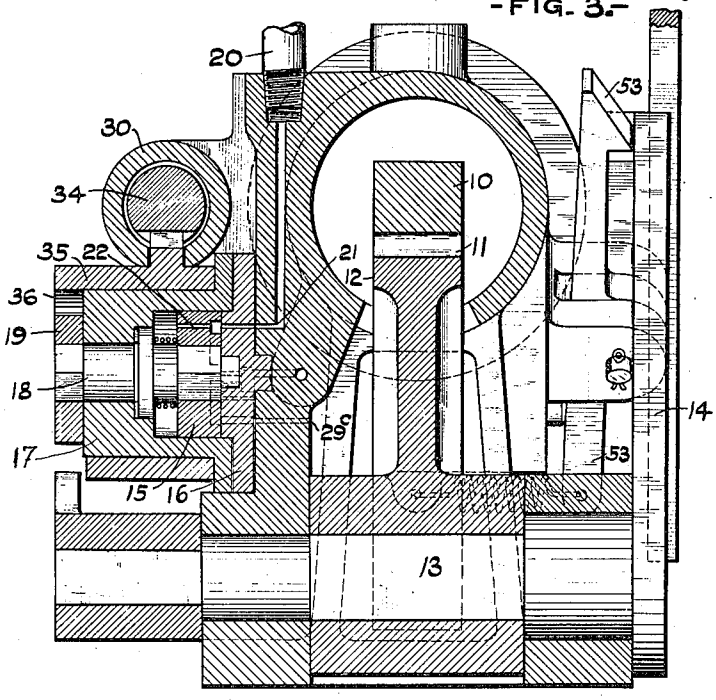

-FIG. 4.-

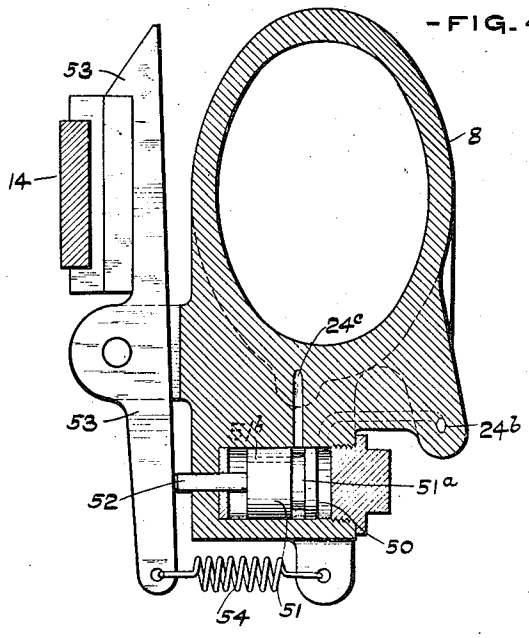

WITNESSES

J. Howdew Dell.

A. S. Fowler

INVENTOR

Albert Gottschalk

by Edward A. Wright

Atty.

A. GOTTSCHALK.

FLUID PRESSURE DOOR OPERATING DEVICE.

APPLICATION FILED JULY 20, 1911.

1,134,608.

Patented Apr. 6, 1915.

4 SHEETS—SHEET 3.

-FIG.10.-

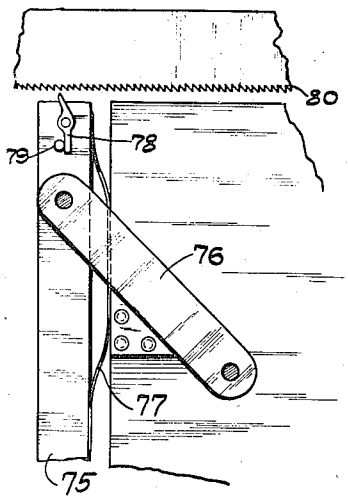

-FIG.9.-

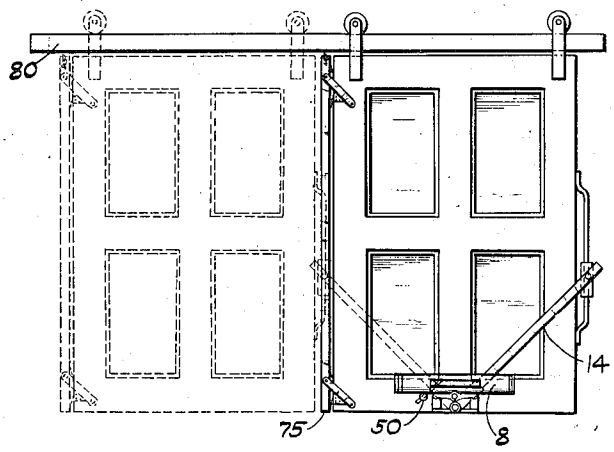

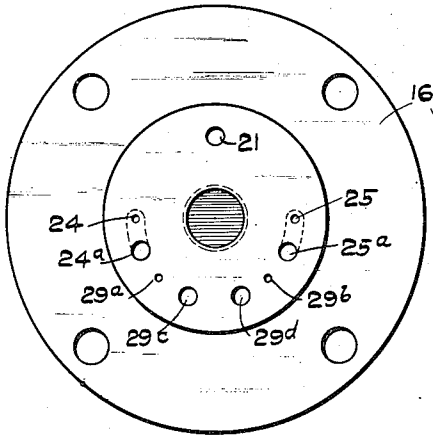

-FIG.5.-

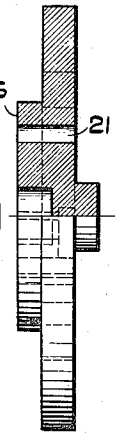

-FIG.6.-

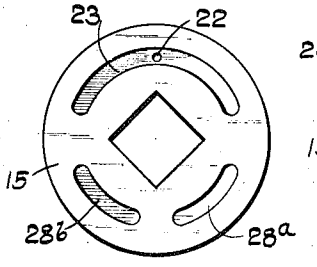

-FIG.7.-

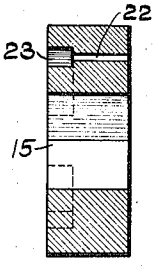

-FIG.8.-

WITNESSES

J. Howard Pell.

A. D. Fowler

INVENTOR

Albert Gottschalk

by Edward A. Wright

Atty.

A. GOTTSCHALK.

FLUID PRESSURE DOOR OPERATING DEVICE.

APPLICATION FILED JULY 20, 1911.

1,134,608.

Patented Apr. 6, 1915

4 SHEETS—SHEET 4.

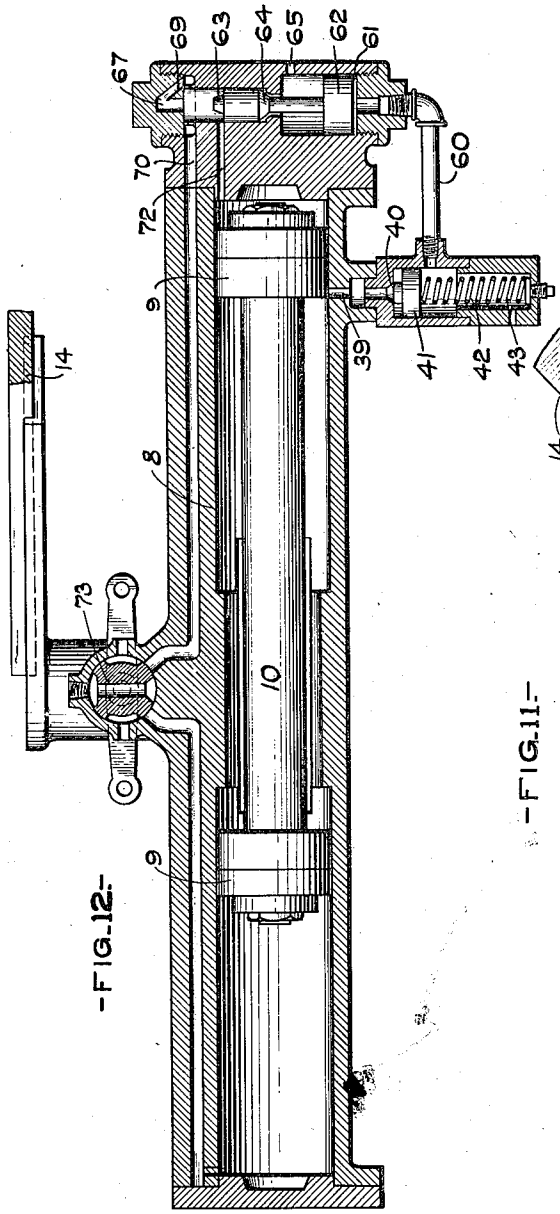

FIG. 12.

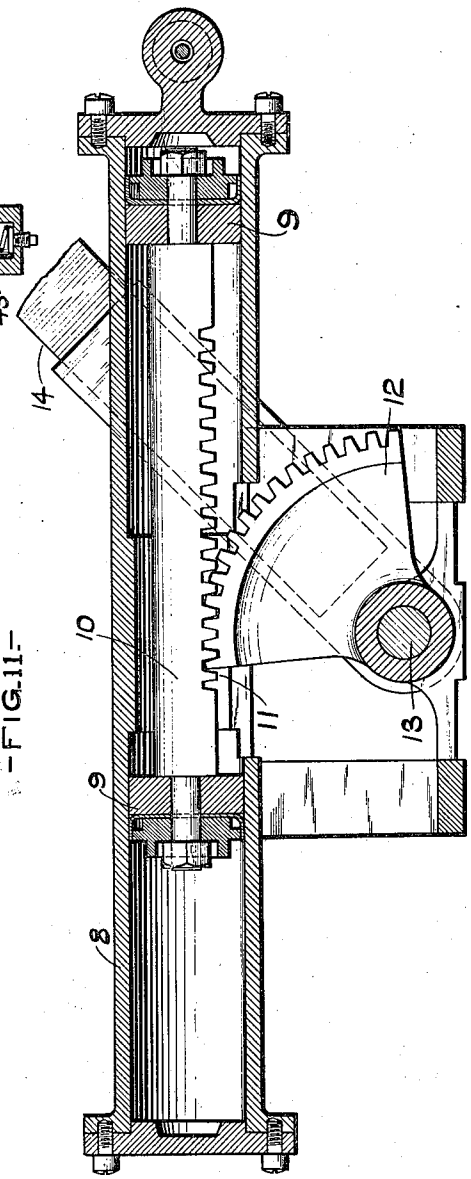

FIG. 11.

WITNESSES

Howard Bell.

A. S. Fowler.

INVENTOR

Albert Gottschalk

by Edward A. Wright

Atty

UNITED STATES PATENT OFFICE.

ALBERT GOTTSCHALK, OF NEW YORK, N. Y., ASSIGNOR TO NATIONAL PNEUMATIC COMPANY, OF CHICAGO, ILLINOIS, A CORPORATION OF WEST VIRGINIA.

FLUID-PRESSURE DOOR-OPERATING DEVICE.

1,134,608. Specification of Letters Patent. Patented Apr. 6, 1915.

Application filed July 20, 1911. Serial No. 639,611.

To all whom it may concern:

Be it known that I, ALBERT GOTTSCHALK, a citizen of the United States, residing at New York, in the county of New York and State of New York, have invented new and useful Improvements in Fluid-Pressure Door-Operating Devices, of which the following is a specification.

This invention relates to fluid pressure devices for operating doors of cars, elevators and the like, and is more particularly in the nature of an improvement on the apparatus shown and described in my prior pending applications Ser. No. 519,432, September 24, 1909, and Ser. No. 593,032, filed November 18, 1910.

As set forth in the earlier application above noted, when the door is arrested during its closing movement by striking a person or other obstruction in its path, the pressure which accumulates in the main cylinder operates to open a spring seated valve, and pass into a valve shifting cylinder to close the main valve and cut off the supply of fluid to the main cylinder, and open an exhaust to the atmosphere.

One of the objects of my present improvement is to provide means for this purpose separate from the main supply valve and so designed as to operate automatically to temporarily close and then again open the supply so that the door may be actuated to close as soon as the person or obstruction is removed and this without any special attention on the part of the guard or operator.

Where a fluid pressure latch device is employed for locking the door actuating lever in its closed position, as set forth in my second pending application it is sometimes difficult to release the latch automatically if there is a heavy pressure acting on the main piston to open the door, and another object of my present improvement is to provide means for releasing the latch before admitting fluid to the cylinder of the door actuating piston.

Still another object is to provide the valve mechanism with separate sets of ports, of different capacities, whereby the desired cushioning effect may be obtained and the door may be moved more rapidly in its opening movement than in its closing movement, and further that in the intermediate or lap position in which the admission ports are closed there may be a free exhaust from either or both ends of the cylinder to permit of a quick reversal or a manual movement of the door, and also provide an escape for all leakage which might accumulate pressure in the cylinder.

Still another object is to provide improved means attached to the door to positively check the movement when the door strikes a person or object during its closing movement. These and other objects will now more fully appear from the following description, and the novel features will be pointed out in the claims.

In the accompanying drawings: Figure 1 is a plan of a door operating device, portions being broken away, and showing certain features of my improvement in horizontal section; Fig. 2, a side elevation, with the valve shifting cylinder and a portion of the main cylinder indicated in vertical section; Fig. 3, a substantially central transverse vertical section; Fig. 4, a section taken susbtantially on an inclined plane indicated by line *x x* of Fig. 2; Fig. 5, a face view of the main valve seat; Fig. 6, a part elevation and part section of same; Fig. 7, a face view of the rotary valve; Fig. 8, a section of the same; Fig. 9, a view of a door with my improvement applied thereto; Fig. 10, a detail view of a corner of the door upon a larger scale, and showing my improved attachment; and, Figs. 11 and 12, a longitudinal section, and a horizontal section respectively, showing a slightly modified form of door operating device.

As set forth in my prior pending application above referred to, the device in general comprises a long cylinder with a double headed piston, the heads 9 being joined by a rod or bar 10 having rack teeth 11 adapted to engage the geared segment 12 on the rock shaft 13, and operate an arm 14 which may be connected to move the door in any desired manner.

A valve is employed for controlling the supply of fluid to the respective ends of the cylinder for opening and closing the door, and while any suitable or preferred form of valve may be used in any convenient location, I have illustrated a valve 15 of the rotary type located on a seat 16 which may be formed either separate from or integral with the cylinder casing and frame to which a cap section 17 covering the valve and chamber may be secured. On the valve stem 18

outside the casing is mounted a lever arm 19 to the ends of which may be attached pull rods or any suitable form of mechanical or electrical connections extending within the reach of the operator who is to control the operation of the door. A supply pipe 20 leading from a source of fluid pressure, such as a reservoir of compressed air communicates through port 21 in valve seat and port 22 in valve 15 with the valve chamber, the port 22, having an extension or cavity 23 in the face of the valve so that the compressed air or other fluid is admitted to the valve chamber in all the positions of the valve. Ports 24 and 25 may lead from the valve seat to the opposite ends of actuating cylinder 8 for admitting fluid under pressure to open and close the door.

When the valve is in its normal or lap position, with the handle or lever 19 horizontal, as indicated in Fig. 2, the supply of fluid to either end of the operating cylinder is cut off, the ports 24 and 25 being closed. The valve lever is oscillated in one direction for admitting fluid under pressure to the left end of cylinder 8 for moving the piston to open the door, and the lever is turned in the opposite direction from its normal or lap position for admitting fluid to the right end of the cylinder for closing the door.

In order that the valve may normally occupy its lap position with the supply to either end of the cylinder cut off when the door is in either its open or closed position, and thereby prevent leakage, I provide means controlled by the movement of the motor piston or door to either end of its stroke for automatically shifting the valve to lap position and thereby cut off the supply of fluid to the cylinder. Various forms of mechanism for this purpose may be devised, that shown herein comprising a valve shifting motor having cylinder 30 communicating by ports with the door actuating cylinder, and containing a double piston with opposite heads 33 connected by rack bar 34 which engages teeth on the oscillating sleeve 35 mounted on the valve casing and provided with a projection 36 adapted to engage the valve lever and shift the same to its horizontal position.

According to one of the features of my present improvement the valve seat 16 is provided with two sets of ports for each end of the cylinder, that is, 24 and 24^a, and 25 and 25^a, communicating with the respective ends of the cylinder, and ports 29^a, 29^b, 29^c and 29^d, leading to the atmosphere.

The ports 24^a and 25^a are larger than the respective admission ports 24 and 25, and the exhaust ports 29^c and 29^d are larger than exhaust ports 29^a and 29^b. Two cavities 28^a and 28^b, in the face of the rotary valve 15 coöperate with these exhaust ports and are so located that the large ports 24^a and 29^c, and 25^a and 29^d respectively, are connected in the normal lap position of the rotary valve. This permits the free escape of fluid from either or both ends of the cylinder in this position of the valve so as to allow a prompt reverse movement of the door whenever desired and to prevent the accumulation of pressure in the cylinder from leakage or any other cause. It also provides for a free manual movement of the door from its open position when the valve is in this position. When the valve is turned in either direction for admitting fluid to actuate the piston the restricted admission port 24 or 25 is opened and the correspondingly restricted exhaust port 29^b or 29^a is put in communication through cavity 28^b or 28^a with the port 25^a or 24^a from the other end of the cylinder respectively so that the proper rate of admission and the desired cushioning effect is obtained. In this manner, the exhaust may be restricted at one time for cushioning the movement of the door and be fully open at another time to allow a free movement thereof, and provide an escape for all leakage. The inlet port 25 and exhaust port 29^a, which are open in the position of the valve for closing the door may also be of a smaller capacity than the admission and exhaust ports for the other end of the cylinder, whereby the door may be moved more rapidly in its opening movement than in its closing movement.

For locking the mechanism in the closed position of the door, the latch or locking lever 53 is pivoted upon the casing and is held by spring 54 in such position as to normally engage the operating arm 14, and lock the same in the closed position of the door, as shown in Fig. 2, the latch being released by the stem 52 of the plunger or piston 51 operating in cylinder 50, as described in my second co-pending application above referred to. According to my present improvement, the passage 24^b, from admission port 24 of the main valve seat leads first into cylinder 50 where the air pressure moves the piston 51 thereby releasing the latch and opening the passage 24^c, leading into the end of the main cylinder. In this manner the latch is released before the fluid enters the main cylinder and before any pressure is exerted on the main piston tending to open the door. As long as the pressure acting on piston 51 is sufficient to overcome the spring 54 the passages 24^b and 24^c are in free open communication with each other but when the pressure is diminished to such a point that the spring 54 returns the piston 51 and cuts off the port 24^c, any fluid under pressure remaining in the main cylinder may escape through a groove 51^a and port 51^b in piston 51. The main exhaust may, however, discharge through ports 37 and 38 controlled by the valve shift-

ing piston 33, as shown in my prior applications, if desired. When the admission port 24^c is controlled by the piston 50, the vent port 51^b should be of the proper restricted capacity to check the outflow from the cylinder during the closing movement of the piston, in order to provide for the proper cushioning effect.

According to another feature of my improvement, I provide means for automatically cutting off the supply of fluid to the cylinder and for promptly releasing the same to the atmosphere when the door and piston are arrested during the opening movement. Such means may comprise a cylinder 61 having piston 62 for operating valves 63 and 64, which control communication from the admission port of the main valve, passages 70, 69, and chamber 67 into chamber 63 and through port 72 into the main cylinder 8, also from said cylinder and chamber to the atmosphere through exhaust port 65. A spring 68 with stem 66, may be used, if desired, and normally tends to keep the admission valve 63 open and the exhaust valve 64 closed.

The pressure valve device adapted to be actuated by the pressure accumulating in the end of the cylinder when the door is arrested in its closing movement, is similar to that described in my prior application and comprises a valve 40, piston 41, and spring 42, connected to the cylinder by a port 39, but the pipe 60 leads to the cylinder 61 of piston 62 instead of to the valve shifting cylinder, as in said prior application. A check valve 71 may be located in the passage or pipe 60.

When the pressure on the main cylinder 8, accumulates to a sufficient point to open valve 40, the increased area presented by piston 41 causes same to immediately move out against the spring 42 and open the port leading to pipe 60 and cylinder 61 thereby forcing up piston 62 to close admission valve 63 and open exhaust valve 64. This serves to temporarily cut off the supply of fluid to the main cylinder and exhausts the same promptly to atmosphere. Then as soon as the pressure in cylinder 61 is sufficiently reduced by leakage past check valve 71 and out at port 43 or around piston 62, the spring 68, and the fluid pressure act to again open valve 63 and close valve 64. The fluid pressure also normally tends to hold this exhaust valve 64 closed. The time required for the pressure on piston 62 to leak down is determined by the volume of cylinder 61 and pipe 60, and by the rate of leakage, either or both of which may be varied as desired. When the valve 63 is thus again opened, the fluid pressure is again admitted to the main cylinder to close the door but if the door is still obstructed the operation of the valve device is repeated, and when the obstruction is removed the door is automatically closed by the fluid pressure as above described, and without any attention on the part of the guard or operator. It will be noticed that this improved valve device is entirely separate from the main distributing valve, and may be applied to various forms of door operating devices, as shown for instance in Figs. 11 and 12, in which it is applied to a simple form of motor having a hand operated valve 73, for opening and closing the admission and exhaust passages for the respective ends of the main cylinder. When the door is stopped during the closing movement, the increasing pressure opens valve 40 and actuates piston 62 to move the valves 63 and 64, as before described, to cut off the supply of fluid to the cylinder and open the exhaust therefrom. As the fluid is thus released promptly from the cylinder, the door may be readily pushed back to open position, if desired.

For the purpose of positively checking the door when the same strikes against a person or object, a yielding strip may be attached to the edge of the door, as indicated at 75, Figs. 9 and 10, the strip being movably attached to the door and arranged to be deflected by the pressure so as to bear against a stationary guide or bar, with sufficient frictional resistance to stop the movement of the door. Such stationary bar may be located near the top of the door, as indicated at 80, and, if desired, may be provided with teeth for engaging a pawl 78 pivoted on the strip 75. The strip may be supported by pivoted links 76, and normally held forward by means of a spring 77.

When the strip swings upward, upon striking against a person or object, the pawl engages the teeth of fixed bar 80 and immediately stops the movement of the door. The pawl may rest against a stop 79 to prevent turning in one direction, but is free to swing in the other direction so that the door may be readily pushed back toward the open position, as the fluid pressure is automatically cut off and exhausted to the atmosphere.

Having now described my invention, what I claim as new, and desire to secure by Letters Patent, is:

1. In a door operating apparatus, the combination with a fluid pressure motor for actuating the door and a main valve for controlling the supply of fluid to the motor, of a separate valve device operating automatically upon the arrest of the door during its closing movement, to cut off the supply of fluid to the motor.

2. In a door operating apparatus, the combination with a fluid pressure motor for actuating the door and a main valve for controlling the supply of fluid to the motor, of a separate valve device operating auto-

matically upon the arrest of the door during its closing movement, to cut off the supply of fluid to the motor, and exhaust the fluid therefrom.

3. In a door operating apparatus, the combination with a fluid pressure motor for actuating the door and a main valve for controlling the supply of fluid to the motor, of a separate valve device operated by the increasing pressure in the main cylinder when the door is arrested during its closing movement, to cut off the supply of fluid to the motor.

4. In a door operating apparatus, the combination with a fluid pressure motor for actuating the door, of a valve device operated by a predetermined degree of pressure in the main motor to temporarily close the supply to and open an exhaust from the said motor.

5. In a door operating apparatus, the combination with a fluid pressure motor for actuating the door, of a valve device operated by a predetermined degree of pressure in the motor to temporarily cut off the supply of fluid and then automatically open the supply.

6. In a door operating apparatus, the combination of a fluid pressure motor for actuating the door, a main valve for controlling the supply of fluid thereto, another valve for also controlling the supply of fluid, a piston for actuating the latter valve, and a pressure valve governed by the pressure in the main motor to control the pressure acting on said piston.

7. A car door having a yielding strip attached to the edge thereof and adapted to be deflected against a stationary part for checking the movement of the door.

8. In a car door device, the combination with the door, of a yielding strip pivotally connected to the front edge of said door, and a stationary bar adapted to be engaged by the strip when the same strikes against a person or object during the closing movement of the door.

9. In a car door device, the combination with the door, of a yielding strip pivotally connected to the front edge of said door, a pawl mounted on said strip, and a stationary rack bar adapted to be engaged by said pawl.

10. In a car door device, the combination with a door having a yielding strip attached to the edge thereof, and adapted to be deflected against a stationary part for checking the movement of the door, and a motor for actuating the same, of means operated by the pressure of the motor fluid to cut off the supply of fluid to the motor.

ALBERT GOTTSCHALK.

Witnesses:
A. S. FOWLER,
JAMES M. HAGAR.