Nov. 11, 1924. 1,515,471

A. L. FOLEY

LOCOMOTIVE WHISTLE AND MOUNTING

Filed Dec. 10, 1923

FIG. 1

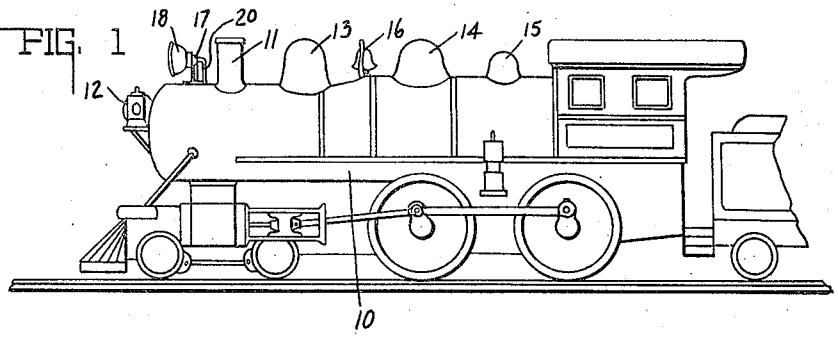

FIG. 2

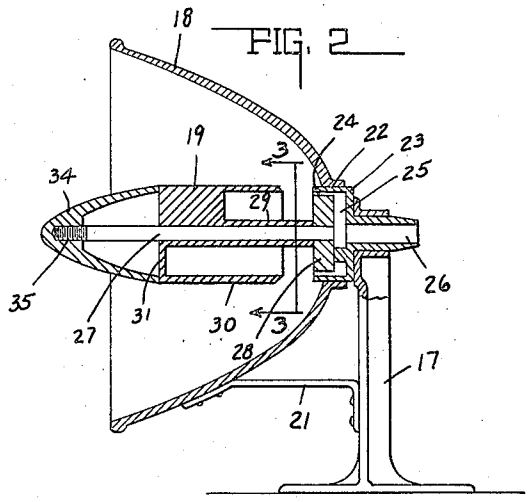

FIG. 3

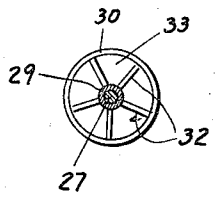

FIG. 4

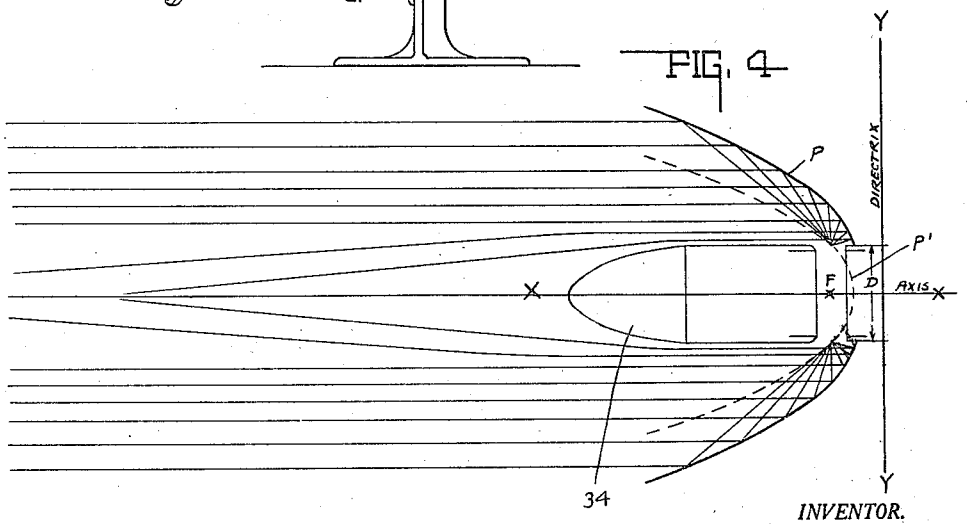

INVENTOR.
ARTHUR L. FOLEY.

BY Foster & Foster

ATTORNEYS.

Patented Nov. 11, 1924. 1,515,471

UNITED STATES PATENT OFFICE.

ARTHUR L. FOLEY, OF BLOOMINGTON, INDIANA.

LOCOMOTIVE WHISTLE AND MOUNTING.

Application filed December 10, 1923. Serial No. 679,843.

To all whom it may concern:

Be it known that I, ARTHUR L. FOLEY, a citizen of the United States, and a resident of Bloomington, county of Monroe, and State of Indiana, have invented a certain new and useful Locomotive Whistle and Mounting; and I do hereby declare that the following is a full, clear, and exact description thereof, reference being had to the accompanying drawings, in which like numerals refer to like parts.

This invention chiefly relates to locomotive whistles and mountings therefor.

The chief object of the invention is to mount a whistle upon a locomotive or interurban car in such a manner that the total sound produced thereby will be increased and discharged in a path substantially forwardly of the locomotive with a minimum of lateral dispersion and with a maximum discharge of the total sound produced.

The foregoing object is accomplished in three ways: First, mounting the whistle forwardly of all interfering obstructions upon the locomotive so that the sound produced by the whistle and directed forwardly will not be reflected, blanketed, dispersed or absorbed, but all will be substantially effective. A second method of increasing the efficiency of the whistle is by positioning the same upon an axis parallel to the longitudinal axis of the locomotive, so that the sound produced thereby will be discharged along said longitudinal axis. A third method of accomplishing the foregoing object is to provide a reflector and resonator which is associated with the whistle in such a way that substantially all of the sound produced by the whistle will be discharged forwardly, thereby forming a cylinder of sound rays.

A minor feature of the invention consists in providing the whistle with a conoidal tip whereby the sound discharged in cylindrical formation does not rush into the central void caused by the whistle, but will flow into the same gradually.

The full nature of the invention will be understood from the accompanying drawings and the following description and claims:

In the drawings, Fig. 1 is a side elevational view of a standard locomotive equipped with the invention. Fig. 2 is an enlarged central sectional view of the invention. Fig. 3 is a transverse sectional view taken on the line 3—3 of Fig. 2 and in the direction of the arrows. Fig. 4 is a diagram of the theoretical sound ray path secured from one feature of the invention.

In the drawings 10 indicates a locomotive within is mounted a steam producing mechanism and the same includes the stack 11, headlight 12, sand dome 13, steam dome 14, safety valve 15, and bell 16, all of which is standard construction. Heretofore locomotive whistles have always been positioned behind the stack and usually intermediate or to one side of some of the foregoing obstructions upon the top of the locomotive. In the present invention a bracket indicated generally by the numeral 17 is positioned forwardly of the stack 11 and supports a sound resonator and reflector 18 as well as a whistle 19 supplied by a conduit 20 connected with the source of steam generation within the locomotive 10.

Heretofore the whistle has invariably been positioned behind the stack and other of the foregoing obstructions; and this positioning of the whistle behind the steam generator results in the sound being reflected angularly of the track instead of down the track where it is most needed. Not only do the smoke stack, steam dome and other obstructions act as lateral reflectors and deflectors of the sound, but the hot gases, in front of the whistle, discharged by the stack and the heated air arising from the locomotive in front act as a dispersive lens. Said gases and heated air in addition thereto act as a blanket which tends to absorb and refract the rays of sound so that the intensity of the whistle sound in front of the locomotive is actually much less than it is at right angles to the track. Actual experiments have demonstrated that the sound of a locomotive whistle when positioned as previously described was twice as intense at the side of the locomotive where it is ordinarily not needed and where it is generally a nuisance, as the same sound was in front of the locomotive where warning signals are essential.

In the drawings the bracket 17, see Fig. 2, is suitably secured upon the locomotive and a lateral support 21 forms a support for a combination resonator and reflector 18. This resonator and reflector may be of any desired shape. Herein the same is illustrated as of a preferred shape, the exact construction of which is illustrated in Fig. 4 and will be described more specifically hereinafter. The reflector is provided with a

central opening 22, and into said central opening there projects a whistle base 23 having a circular channel 24 at its forward and outer peripheral edge. The annular channel 24 thus formed communicates with the chamber 25, in turn communicating with a pipe 26 connected to the conduit 20 supplied with steam from the source of steam generation within the locomotive. A stem 27 is mounted axially of the reflector 18 and carries the closure 28. Positioned upon said closure is a sleeve 29 surrounded by a shell 30, closed at its forward end as at 31. Herein, as shown in Fig. 3, a plurality of radial walls 32 are provided forming chambers 33 within said shell and about said sleeve 29. These chambers may be of various depths as shown clearly in Fig. 2, and form a whistle of the chime type. It will, of course, be apparent that the radial walls 32 may be omitted and a single chamber 33 provided forming a single (tone) whistle.

The steam jet issuing from the annular channel 24 discharges against the peripheral edge 30 and is thrown into vibration, the chambers 33 being resonators, which by resonance, increase the sound intensity and determine its pitch or pitches. Herein a nut 34 having a conoidal exterior is provided with a threaded portion 35 adapted to receive the threaded end of the stem 27 and thus secure the whistle construction together and in place. The conoidal nut 34, as will be explained hereinafter, likewise has a useful purpose in addition to that of securing the whistle forming chamber upon the stem 27.

The reflector 18 in addition to functioning as a resonator, reflecting the sound discharged from the whistle, also secures maximum sound production, since the reflector carries along with it a body of air, thus equalizing the air pressure on all sides of the whistle and permitting all portions of the whistle to function, which is not the case when a whistle is mounted with its axis other than parallel to the longitudinal axis of the locomotive and is moved through the air at high speeds.

As shown in Fig. 4, F denotes the focus of a parabola having a curve p' and a directrix Y—Y and an axis X—X. A circular area defined by the dimension D defines the circular area of the whistle, and about said whistle there is described a curved surface generated by the parabolic curve p' to form the resultant curve surface p. Thus, instead of a point focus at F, there is secured a circular or peripheral focus in a plane passing through the point source F, and thus the rays discharged from the whistle will be substantially all projected laterally and parallel from the combination reflector and resonator in a substantially cylindrical body.

The object of the conoidal nut 34 is to minimize the disturbance that would be produced in the cylindrical bundle of sound rays, by preventing the sudden bending or diffraction of those rays in passing the forward end of the whistle.

It has been experimentally determined that with the above reflector, the above axial positioning of the whistle, the conoidal nut and the mounting of the entire construction aforesaid ahead of all obstructions such as a stack and the like, the intensity of the whistle sound in front of the locomotive was greatly magnified and the intensity for the same steam consumption was six times as great ahead as when the same whistle was normally positioned and unprovided with a resonator and reflector.

While the invention has been described in great detail in the foregoing specifications, the same is to be considered as illustrative and not restrictive in character. The various modifications thereof such as brackets and the like and other parts are all considered to be within the purview of this invention, as well as all others which will readily suggest themselves to those skilled in the art, reference being had to the appended claims.

The invention claimed is:

1. The combination of a locomotive or the like including a source of fluid pressure and appurtenances thereabove, a fluid pressure operable whistle positioned upon said locomotive forwardly of all appurtenances thereon, and forwardly and above the source of fluid pressure and sounded thereby, and a resonating paraboloid-like reflector surrounding said whistle for projecting substantially all of the sound rays forwardly from the locomotive.

2. The combination of a locomotive or the like including a source of fluid pressure and appurtenances thereabove, a fluid pressure operable whistle having a peripheral source of sound positioned upon said locomotive forwardly of all appurtenances thereon and forwardly and above the source of fluid pressure and sounded thereby, and with its axis parallel to the locomotive longitudinal axis, and a resonating paraboloid-like reflector surrounding the whistle, whereby the peripheral source of sound is in substantial coincidence with the focus of the reflector for projecting substantially all of the sound rays forwardly from the locomotive.

3. The combination of a curved sound director, a peripheral source of sound positioned axially thereof, and a conoidal construction positioned axially of the reflector.

4. The combination of a peripheral source of sound, a curved sound director having a surface generated by a parabola revolved about said peripheral source of sound for

directing all of the sound rays forwardly, and a conoidal construction positioned in alignment with the source of sound.

5. The combination of a sound director having a paraboloid-like surface with a circular focus, and a whistle having a circular fluid jet positioned on the axis of the reflector and with the jet and reflector focus in substantial coincidence.

6. The combination of a peripheral source of sound, a curved resonating sound director of sufficient length having a surface generated by a parabola revolved about said peripheral source of sound for directing the sound rays forwardly and of such size and length whereby resonance of the sound source pitch is secured and the total intensity of the sound is increased.

7. The combination of a sound director having a paraboloid-like surface with a circular focus, and a whistle having a circular and longitudinally discharging fluid jet positioned on the axis of the reflector and with the jet and reflector focus in substantial coincidence.

In witness whereof, I have hereunto affixed my signature.

ARTHUR L. FOLEY.