Oct. 9, 1956 I. GEBEL 2,766,373

PUSH BUTTON OPERATED MECHANISM

Filed Feb. 4, 1954

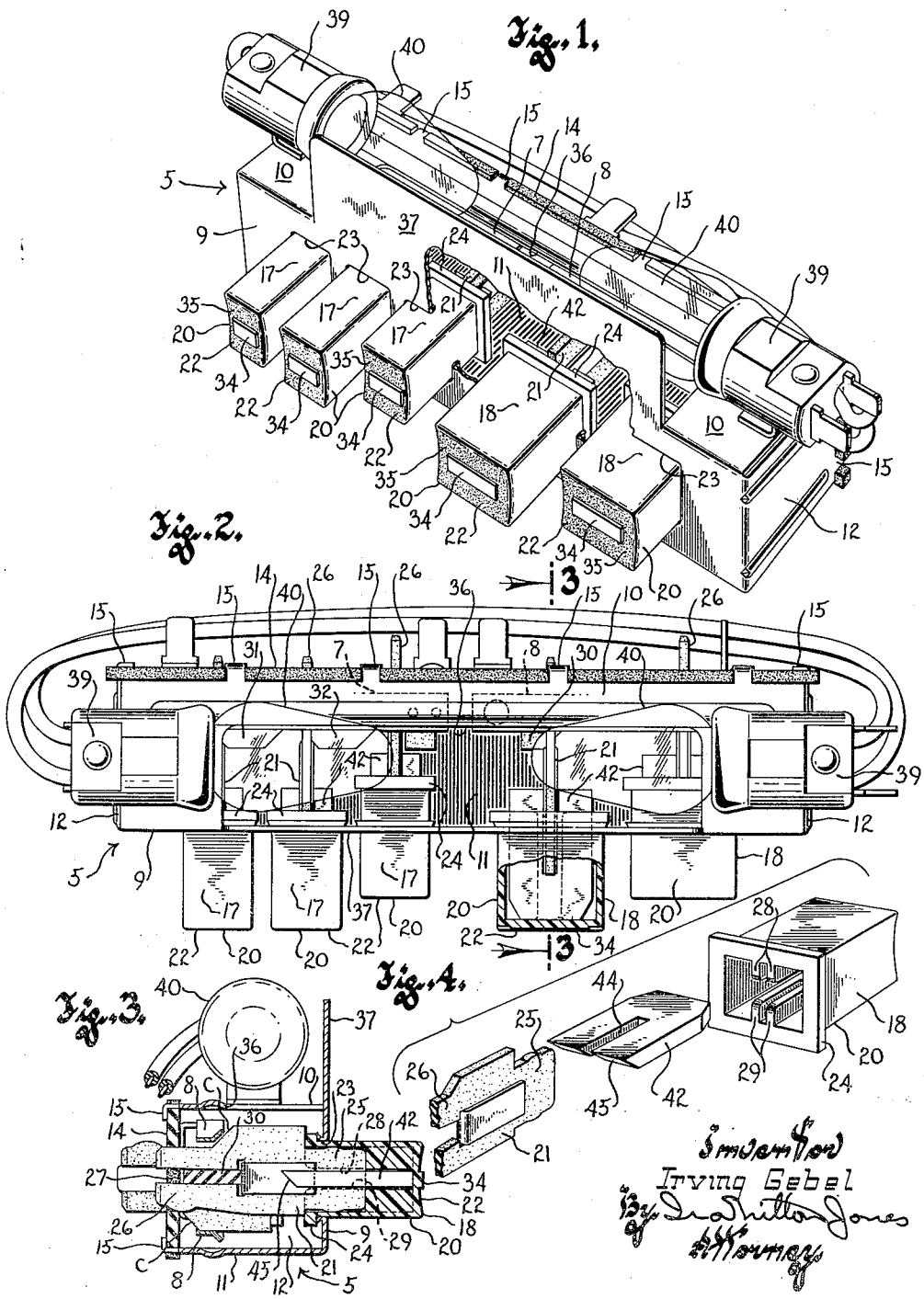

Inventor
Irving Gebel
By Ira Hilton Jones
Attorney

United States Patent Office 2,766,373 Patented Oct. 9, 1956

2,766,373

PUSH BUTTON OPERATED MECHANISM

Irving Gebel, Oak Park, Ill., assignor, by mesne assignments, to Controls Company of America, Schiller Park, Ill., a corporation of Delaware

Application February 4, 1954, Serial No. 408,196

8 Claims. (Cl. 240—2)

This invention relates to push button operated mechanisms generally, and has more particular reference to push button electric switches for controlling one or more groups of electrical circuits.

The mechanism for push button operated switches of this type is usually contained within an elongated compact box-like housing, and the push buttons project through the front wall of the housing in spaced relationship to one another along the length of the housing and are constrained to back and forth motion along a path normal to the front wall of the housing.

In general, it is the purpose of this invention to provide simple and inexpensive means for illuminating transparent wall portions on the fronts of the push buttons, from a source of light remote from the push buttons. The purpose of illuminating such transparent wall portions on the fronts of the buttons, of course, is to render printing or other distinguishing indicia which may be imprinted on these transparent wall portions more clearly visible than would otherwise be possible.

More specifically, it is an object of this invention to provide a push button operated switch of the character described wherein a light reflective member is mounted in each push button in register with a transparent wall portion on the front of the button, so that light entering the housing through an aperture in one side wall thereof and impinging projecting portions of the light reflective members at the rear of the buttons will be directed forwardly onto the transparent wall portions on the fronts of the push buttons.

From the foregoing stated objects it will be seen that it is also a purpose of this invention to provide a push button operated switch in which illumination of transparent wall portions on the fronts of the push buttons is accomplished without the necessity of providing a separate light source for each push button, and without the need for enlargement of the switch housing to accommodate the source of light.

With the above and other objects in view, which will appear as the description proceeds, this invention resides in the novel construction, combination and arrangement of parts substantially as hereinafter described and more particularly defined by the appended claims, it being understood that such changes in the precise embodiment of the herein disclosed invention may be made as come within the scope of the claims.

The accompanying drawing illustrates one complete example of the physical embodiment of the invention constructed according to the best mode so far devised for the practical application of the principles thereof, and in which:

Figure 1 is a perspective view of the push button switch of this invention, portions thereof being broken away to better illustrate details of construction;

Figure 2 is a plan view of the switch shown in Figure 1, a front end portion of one of the push buttons being broken away and shown in section;

Figure 3 is a cross sectional view taken through Figure 2 along the plane of the line 3—3; and

Figure 4 is an exploded perspective view of one of the push button actuators, with the parts thereof separated but shown in the order of their assembly with the push button.

Referring now more particularly to the accompanying drawing it will be seen that the push button switch of this invention comprises an elongated box-like housing 5 containing the mechanism to be actuated, in this case two pairs of flexible switch arms 7 and 8. The housing 5 may be considered as having a substantially U-shaped cross section (see Figure 3) with the front wall 9 thereof constituting the bight of the U and the legs 10 and 11 providing opposing side walls defining the top and bottom, respectively, of the housing.

Flaps 12 bent rearwardly from the extremities of the front wall 9 provide end walls for the housing, and the back thereof is provided by an insulating plate 14 which abuts the rear edges of the side and end walls and is secured in position closing the back of the housing by tangs 15 projecting from the edges of the side and end walls through notches in the periphery of the insulating plate and bent over upon its rear face, as seen best in Figure 3.

The particular switch illustrated has a three circuit section including upper and lower flexible switch arms 7 controlled by three actuators 17; and a two circuit section including upper and lower flexible switch arms 8 controlled by two actuators 18. The two sections of the switch, of course, are independent of one another.

Each of the actuators comprises an elongated hollow push button 20 and an actuating stem 21 carried by the button and projecting rearwardly therefrom. The push buttons are preferably, though not necessarily, of rectangular cross section as illustrated, and are open at the rear. Each has a front wall 22 against which pressure may be applied to depress the actuator for operation of its section of the switch.

Each of the buttons is slidably received in a rectangular hole 23 in the front wall 9 of the housing, and it will be appreciated that the actuators are spaced from one another along the length of the housing. In addition each of the buttons has an externally flanged rear end, indicated by the numeral 24, to prevent forward displacement of the button from its hole in the front wall of the housing.

The actuating stem of each button is a flat substantially thin piece of insulating material having a reduced forward end portion 25 which is anchored frictionally inside the rear portion of the button, and a bifurcated rear portion 26 which projects through a slot 27 in the back wall 14 of the housing. Hence the slots 27 and the holes 23 in the front wall of the housing cooperate to mount the actuators on the housing and to constrain the same to back and forth reciprocatory motion along paths normal to the front wall 9.

Pairs of upper and lower ribs 28 and 29, respectively, on each button, projecting part-way toward one another from the inner surfaces of the button, define channels in which the opposite edge portions of the reduced front end 25 of its actuating stem is received. These channels hold the actuating stem centered with respect to the longitudinal axis of the button, with the opposite faces of the stem in planes normal to both the front wall 9 and top 10 of the housing.

The rear end portions of the actuating stems of the actuators 18 extend edgewise between the upper and lower switch arms 8, as seen in Figure 3, and these arms are actuated to their circuit closing positions, in consequence of depression of the push buttons, by cams C on one side

edge of each actuating stem, formed integrally therewith. Similar cams (not shown) on the side edges of the stems of the actuators **17** impart the required circuit closing motion to the switch arms **7** or other mechanism to be actuated by depression of the buttons.

As is more or less conventional in push button selector switches of the type herein illustrated, interlock mechanism is provided for each section of the switch to prevent simultaneous depression of more than one actuator and to effect return of a depressed push button upon depression of another button. The interlock mechanism for the two circuit section of the switch controlled by the two actuators **18** may comprise a single slide **30** received lengthwise between the bifurcations of the actuating stems **21** of these two actuators. The interlock mechanism for the three circuit section of the switch controlled by the three actuators **17** may comprise a pair of such slides **31** and **32**, likewise received between the bifurcations on the rear end portions of the actuating stems of the actuators **17**. It is to be understood, of course, that both the interlock mechanism and the specific switch mechanism to be actuated constitute no part of the invention.

In order to effect illumination of the push buttons **20**, the buttons are preferably made of a transparent plastic material of any desired color. For the purposes of this invention, however, it is important only that a relatively small wall portion **34** on the front of each button be transparent. The portions of the front wall surrounding the transparent portions **34** may be painted or otherwise rendered opaque as indicated at **35**. It is immaterial whether the sides of the push buttons are transparent or opaque. Suitable lettering or other indicia (not shown) is preferably provided on the transparent wall portions **34** of the different buttons to distinguish them from one another.

According to this invention, light from a source thereof externally of the housing is caused to illuminate the transparent wall portions **34** on the fronts of the buttons. For this purpose an elongated aperture **36** is provided in the top of the housing, in this case by striking up a flap **37** from the top of the housing into the plane of the front wall **9** thereof. The aperture **36** is of such length and is so located in the top of the housing that the ends of the aperture will extend at least as far as the actuating stems of the endmost push buttons.

The relatively short remaining portions of the top wall are employed to mount sockets **39** at the opposite ends of the housing, with their threaded openings facing one another. A small light bulb **40** is threaded into each socket as indicated in Figures 1 and 2 so that the bulbs face one another and overlie the aperture **36** directly behind the upstanding flap **37** on the front wall. When these bulbs are energized, light from the source provided thereby enters the interior of the housing through the aperture **36** and illuminates the areas directly behind the push buttons.

It is one of the features of this invention that although the light source is at the exterior of the housing, above and behind the push buttons, light rays from said source are directed forwardly into the interior of each push button and concentrated upon the transparent wall portions **34** at their front ends to illuminate the same and enhance the visibility of identifying lettering or other indicia thereon.

For this purpose each push button is provided with an internal light reflective member **42** consisting of an elongated relatively flat piece of clear plastic material having its forward end abutting the inner surface of the front wall of the button in registry with the transparent wall portion **34** thereof, and having its rear end portion bifurcated as at **44** to embrace the actuating stem on the button. As seen best in Figures 2 and 3, the bifurcated end portion **44** of each light reflective member projects slightly from the rear of its push button, and its rear

extremity has an inclined surface 45 thereon formed by beveling the bottom rear edges of the bifurcations at an angle of approximately 45°. Consequently light from the overhead source which impinges the beveled rear extremities of the bifurcations is bent and directed forwardly along the entire length of each light reflective member and is concentrated upon the transparent wall portion 34 of its button to substantially brightly illuminate any indicia thereon.

It will be appreciated that each light reflective member 42 is held in proper position inside its push button by the actuating stem of the button, and specifically by the engagement of the front extremity of the stem with the bottom of the slot between the bifurcations of the light reflective member. The interengagement between the actuating stems and the bifurcated end portions of the light reflective members also assures that the latter will be held with their opposite flat faces perpendicular to the opposite faces of the stems, and substantially parallel to the apertured top 10 of the housing. It will be observed that each light reflective member is held centered with respect to its button by the reception of the light reflective member between the edges of the pairs of upper and lower ribs **28** and **29** in the button.

Though it is preferable that light rays from the source impinge the beveled end of each bifurcation, adequate illumination of the transparent wall portion on the front of the button will be achieved in the event only one of the bifurcations is impinged by light from the source.

From the foregoing description together with the accompanying drawing, it will be readily apparent to those skilled in the art that this invention provides an exceptionally convenient way of effecting illumination of the front end portions of the push buttons for a device having mechanism controlled by the push buttons, and that the component parts of the push button actuators themselves cooperate with one another to form an exceptionally compact and inexpensive unitary assembly which requires no rivets, screws or other securing devices to maintain the parts assembled.

What I claim as my invention is:

1. A device of the type comprising a box-like housing having front and side walls, an actuator mounted on the housing for back and forth motion in a hole in the front wall of the housing, and a hollow handle on the actuator having its open rear end inside the housing and its front end exposed at the front of the housing, characterized by the provision of: a transparent wall portion on the front of said handle; an aperture in a side wall of the housing which adjoins said front wall thereof, said aperture being adjacent to the actuator; a light source mounted on the exterior of the housing adjacent to said aperture so that light from said source may enter the housing through said aperture; a light reflective member having one portion at all times projecting into the interior of the housing beyond the rear of said handle and in a position to be impinged by light rays from said source, and having another portion extending forwardly through said hole in the front wall of the housing and loosely received in the interior of said hollow handle, in line with said transparent wall portion thereof, for directing light rays entering the housing from said light source forwardly into the handle and for concentrating such reflected light onto the transparent wall portion of the handle, said light reflecting member having a rearwardly facing shoulder thereon spaced forwardly of the open rear of the handle; and an actuating stem carried by the handle and engaged with said shoulder to preclude displacement of the light reflective member out of the open rear of the handle.

2. An electric switch of the type comprising switch mechanism contained within a box-like housing having joining front and side walls, an actuator for said switch mechanism received in a hole in the front wall of the housing and constrained to back and forth motion along

a path substantially normal to said front wall, and a hollow push button on said actuator having its open rear end inside the housing and having its front exposed at the front of the housing, the front of said push button being at all times spaced a substantial distance forwardly of said front wall, characterized by the provision of: a transparent wall portion on the front of said push button; an aperture in a side wall of the housing which adjoins said front wall thereof, and alongside said actuator; a light source mounted on the exterior of the housing and overlying said aperture therein so that light from said source may enter the housing rearwardly of the push button; and a light reflective member mounted inside said push button and extending from said transparent wall portion thereof rearwardly beyond the open rear end of the button and into the interior of the housing to have its rear portion in the path of light rays emanating from said source, for directing light forwardly onto said transparent wall portion of the push button.

3. An electric switch of the type comprising switch mechanism contained within an elongated box-like housing having joining front and side walls, and a plurality of actuators for said switch mechanism spaced from one another along the length of the housing and constrained to back and forth motion along paths substantially normal to said front wall, each of said actuators comprising an elongated hollow push button loosely received in a hole in the front wall of the housing and having a wall at its front at all times spaced a substantial distance forwardly of said front wall of the housing, the open inner end of each push button extending a short distance into the interior of the housing, characterized by the provision of: a transparent wall portion on the front of each push button; an aperture in a side wall of the housing which adjoins said front wall thereof, said aperture being elongated lengthwise of the housing and extending along the rear of all of the actuators; a light source mounted on the exterior of the housing directly adjacent to each end of said aperture so that light from each source thereof may enter the interior of the housing rearwardly of said push buttons; and an elongated substantially flat light reflective member mounted in the interior of each push button with the opposite faces of said member substantially parallel to said apertured side wall of the housing, the forward end of said light reflective member registering with and lying directly adjacent to the transparent wall portion on the front of its push button, and the rear ends of said members projecting rearwardly beyond the open rear ends of their respective push buttons to be at all times exposed at the interior of the housing and being beveled so as to cause light rays entering the housing through said aperture and impinging the beveled ends of the light reflective members to be directed forwardly along their length and concentrated on the transparent wall portions on the fronts of their respective buttons.

4. An electric switch of the type comprising switch mechanism contained within a box-like housing having front and side walls, and an actuator for said switch mechanism constrained to back and forth motion along a path substantially normal to said front wall and comprising a hollow push button loosely received in a hole in the front wall of the housing, the front of said push button being at all times spaced a substantial distance forwardly of said front wall and the inner end of said push button extending a short distance into the interior of the housing, characterized by the provision of: a transparent wall portion on the front of said push button; a substantially thin elongated actuating stem carried by said button, said stem projecting rearwardly from the inner end of the button and having opposite substantially flat faces normal to the front wall of the housing and to one adjoining side wall of the housing, said stem having means on one side edge thereof cooperable with the switch mechanism to be actuated; an aperture in said side wall of the housing alongside one edge of said stem; a light source mounted on said side wall of the housing at the exterior thereof, adjacent to the aperture in said side wall, so that light from said source may enter the housing at the rear of the push button; and an elongated light reflective member mounted inside said push button with its forward end in register with and disposed directly adjacent to said transparent wall portion on the front of the button, and its rear end projecting beyond the inner end of the button and bifurcated so as to embrace a portion of the stem rearwardly of the inner end of the push button, each projecting bifurcation being beveled so that light from said source which impinges either of said beveled bifurcations will be directed forwardly along the length of said light reflective member and conducted onto the transparent wall portion on the front of the push button to illuminate the same.

5. A push button actuator of the character described, comprising: an elongated hollow push button open at its rear and having a transparent wall portion at its front end; a substantially thin elongated actuating stem on said push button, extending rearwardly therefrom, the front portion of said stem extending into the interior of and being anchored in said push button, and the projecting rear portion of said stem being cooperable with mechanism to be actuated, said stem having its median plane disposed substantially on the longitudinal axis of the button; and an elongated light reflective member mounted inside the button with its forward end directly adjacent to and aligning with said transparent wall portion on the front of the button, and its rear end projecting slightly from the rear of the button and disposed alongside said stem and shaped to direct light rays that may impinge the same forwardly along the entire length of the member to cause illumination of said transparent wall portion on the front of the button.

6. The push button actuator set forth in claim 5 further characterized by the fact that the rear portion of said light reflective member is bifurcated and has its bifurcations embracing the actuating stem so that light which impinges the end of either of said bifurcations will be directed forwardly along the entire length of the light reflective member to effect illumination of said transparent wall portion on the front of the button.

7. The push button set forth in claim 6 further characterized by the provision of longitudinal ribs on the button projecting from opposite inner surfaces thereof and embracing the opposite side edges of the front portion of the actuating stem to hold the stem centered with respect to the axis of the button, said ribs projecting toward the light reflective member from opposite sides thereof to hold the same in endwise alignment with the transparent wall portion on the front of the button.

8. The push button actuator set forth in claim 5 further characterized by the provision of a cam surface on one side edge of said actuating stem, rearwardly of the push button, for imparting motion to mechanism to be actuated in consequence of motion of the push button actuator lengthwise of the push button.

References Cited in the file of this patent

UNITED STATES PATENTS

2,334,479	Creager	Nov. 16, 1943
2,437,555	Rees	Mar. 9, 1948
2,581,053	Thomas	Jan. 1, 1952
2,585,503	Schulze	Feb. 12, 1952
2,607,875	Sheidler	Aug. 19, 1952
2,627,685	Henry	Feb. 10, 1953