(12) INTERNATIONAL APPLICATION PUBLISHED UNDER THE PATENT COOPERATION TREATY (PCT)

(19) World Intellectual Property Organization
International Bureau

(43) International Publication Date
31 October 2013 (31.10.2013)

WIPO | PCT

(10) International Publication Number
WO 2013/160863 A2

(51) International Patent Classification:
B07B 1/10 (2006.01)

(21) International Application Number:
PCT/IB2013/053274

(22) International Filing Date:
25 April 2013 (25.04.2013)

(25) Filing Language: English

(26) Publication Language: English

(30) Priority Data:
2012/03046 25 April 2012 (25.04.2012) ZA

(71) Applicant: **DELKOR TECHNIK B.V.** [NL/NL]; Wilheminakade 91, NL-3072 Rotterdam (NL).

(71) Applicant *(for VC only)*: **KOTZE, Gavin, Salomon** [ZA/ZA]; 388 Diana Road, Lynnwood, 0081 Menlo Park (ZA).

(72) Inventors: **MINSON, David, Neil**; #401, 1717 Bayshore Drive, Vancouver, British Columbia V6G 3H3 (CA). **McELVENNY, Rhett, Charles**; Sylvania Heights, Sydney, New South Wales 2000 (AU).

(74) Agents: **MACKENZIE, Colin** et al.; Adams & Adams, PO Box 1014, 0001 Pretoria (ZA).

(81) Designated States *(unless otherwise indicated, for every kind of national protection available)*: AE, AG, AL, AM, AO, AT, AU, AZ, BA, BB, BG, BH, BN, BR, BW, BY, BZ, CA, CH, CL, CN, CO, CR, CU, CZ, DE, DK, DM, DO, DZ, EC, EE, EG, ES, FI, GB, GD, GE, GH, GM, GT, HN, HR, HU, ID, IL, IN, IS, JP, KE, KG, KM, KN, KP, KR, KZ, LA, LC, LK, LR, LS, LT, LU, LY, MA, MD, ME, MG, MK, MN, MW, MX, MY, MZ, NA, NG, NI, NO, NZ, OM, PA, PE, PG, PH, PL, PT, QA, RO, RS, RU, RW, SC, SD, SE, SG, SK, SL, SM, ST, SV, SY, TH, TJ, TM, TN, TR, TT, TZ, UA, UG, US, UZ, VC, VN, ZA, ZM, ZW.

(84) Designated States *(unless otherwise indicated, for every kind of regional protection available)*: ARIPO (BW, GH, GM, KE, LR, LS, MW, MZ, NA, RW, SD, SL, SZ, TZ, UG, ZM, ZW), Eurasian (AM, AZ, BY, KG, KZ, RU, TJ, TM), European (AL, AT, BE, BG, CH, CY, CZ, DE, DK, EE, ES, FI, FR, GB, GR, HR, HU, IE, IS, IT, LT, LU, LV, MC, MK, MT, NL, NO, PL, PT, RO, RS, SE, SI, SK, SM, TR), OAPI (BF, BJ, CF, CG, CI, CM, GA, GN, GQ, GW, ML, MR, NE, SN, TD, TG).

Declarations under Rule 4.17:

— *as to the identity of the inventor (Rule 4.17(i))*

— *of inventorship (Rule 4.17(iv))*

Published:

— *without international search report and to be republished upon receipt of that report (Rule 48.2(g))*

(54) Title: SEPARATION SYSTEM

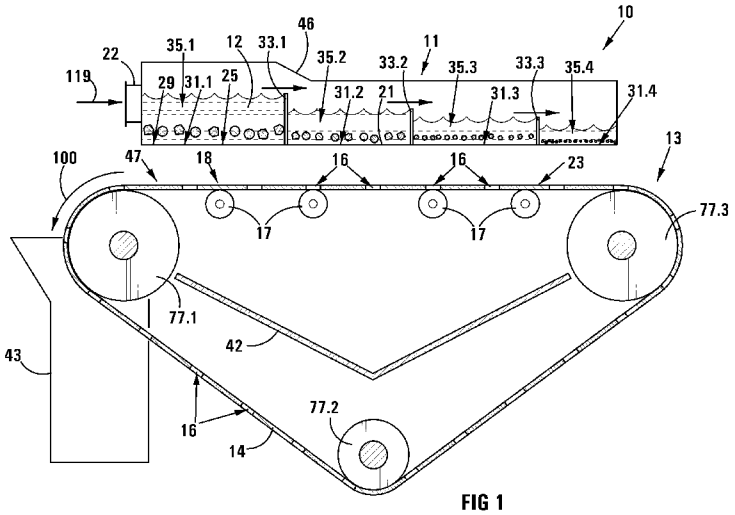

FIG 1

(57) Abstract: This invention relates to a separation system 10 for separating first solid particulate components from second solid particulate components having particle sizes which are smaller than that of the first solid components, wherein the first and second solid components are suspended in a liquid to form a mixture 12. The system 10 includes a first separating arrangement 11; and a second separating arrangement 13. The second separating arrangement 13 includes an endless screening belt/cloth 14 which is displaceable along a predetermined path and which defines a plurality of apertures 16 which apertures 16 are of a suitable size to permit the second solid components to pass therethrough and to impede the passage therethrough of the first solid components. The screening belt/cloth 14 has a separating region 18 and the first separating arrangement 11 is configured to receive the mixture 12, to at least partially separate the first solid components from the second solid components in the mixture 12 and to feed the at least partially separated mixture 12 onto the separating region 18.

WO 2013/160863 A2

TITLE: SEPARATION SYSTEM

FIELD OF INVENTION

THIS INVENTION relates to the separation of first solid particulate components from second solid particulate components having particle sizes which are generally smaller than that of the first solid components, where the first and second solid components are suspended in a liquid. More particularly, it relates to a separation system and method, as well as a method of modifying a separation system.

BACKGROUND OF INVENTION

The Inventors are aware of separation systems which separate first solid particulate components from second solid particulate components having particle sizes which are smaller than that of the first solid components, where the first and second solid components are suspended in a liquid (e.g. tramp material mixed with a finely ground ore which are suspended in water; hereinafter referred to as the mixture). One such system typically includes an endless screening belt which defines a plurality of apertures which apertures are of a suitable size to permit the second solid components to pass therethrough and to inhibit or impede the passage therethrough of the first solid components; a set of rollers around which the screening belt travels; and a drive unit which drives the screening belt around the set of rollers. The path of the belt is such that it includes a generally horizontal separating region onto which the mixture or slurry can be introduced for separation.

A chute or “underpan” is usually positioned below the separating region in order to collect the liquid and second solid components which pass through the apertures. An oversize chute is positioned at a discharge end of the separating region in order to collect the material that remains on the screening belt. In use, the mixture is introduced onto the horizontal separating region from the discharge end or from an end of the separating region opposite the discharge end.

Since the densities of the first and second solid components are usually greater than that of the liquid in which they are suspended, the components tend to sink down onto an operatively upper surface of the horizontal separating region. Some of the first solid components and larger second solid components may therefore end up clogging one or more of the apertures of the screening belt, thereby inhibiting the smaller second solid components, as well as the liquid, from passing through those apertures which, as a result, inhibits effective separation. The clogging may also result in some of the mixture eventually overflowing the sides of the screening belt in the horizontal separating region. This issue has been addressed in the past by installing overflow gutters that collect the overflow material and eventually channel it back to the feeding point where it is again discharged onto the separating region. This solution however causes spillage as well as general housekeeping or maintenance problems.

Another solution the Inventors are aware of is to curve sides of the belt upwards to prevent the accumulated mixture from overflowing, however this does not resolve the origins of the problem.

It is an object of this invention to provide means which the Inventors believe will at least alleviate at least some of the above identified problems.

SUMMARY OF INVENTION

In accordance with one aspect of the invention there is provided a separation system for separating first solid particulate components from second solid particulate components having particle sizes which are smaller than that of the first solid components, wherein the first and second solid components are suspended in a liquid to form a mixture or slurry, the system including:

a first separating arrangement; and

a second separating arrangement which includes an endless screening belt/cloth which is displaceable along a predetermined path and which defines a plurality of apertures which apertures are of a suitable size to permit the second solid components to pass therethrough and to impede the passage therethrough of the first solid components, the screening belt/cloth having a separating region and the first separating arrangement being configured to receive the mixture, to at least partially separate the

first solid components from the second solid components in the mixture and to feed the at least partially separated mixture onto the separating region of the endless screening belt/cloth.

The first separating arrangement therefore acts as an initial/first separation stage, while the second separating arrangement acts as a second or final separation stage.

The first separating arrangement may be configured to feed the at least partially separated first and second solid components onto the separating region at different positions. More particularly, the first separating arrangement may be configured to feed a first portion of the at least partially separated first solid components onto the separating region of the screening belt/cloth closer to a discharge end of the separating region than the remainder of the mixture.

More specifically, the first separating arrangement may be configured to separate the first solid components from the second solid components in a feed/distribution region which corresponds to the separating region of the screening belt/cloth. The first separating arrangement may include a feeding arrangement which defines the feed/distribution region, the feed/distribution region being located directly above the separating region. The feed/distribution region may generally cover substantially the whole separating region, when seen in top view. The feeding arrangement may include a discharge screen which defines the feed/distribution region, the discharge screen defining a plurality of apertures/openings which apertures/openings are of a suitable size to permit the first and second solid components to pass therethrough and onto the separating region of the second separating arrangement. The discharge screen defines a first end which corresponds to the discharge end of the separating region. The first separating arrangement may include a mixture supply means which is configured to feed mixture onto the discharge screen from the first end thereof. More specifically, the mixture supply means may be configured to feed mixture onto the discharge screen from the first end thereof in a direction which is substantially opposite a travel direction of the screening belt/cloth in the separating region, when seen in top view. When mixture is introduced onto the discharge screen, the larger first solid components tend to settle more quickly than the smaller second solid components. Therefore, by discharging the mixture onto the screen from the first end thereof, the larger first solid

components will tend to settle towards the discharge screen closer to the first end, and then be discharged through the apertures/openings of the discharge screen closer to the first end, than the smaller second solid components which will tend to flow/travel further along the discharge screen, away from the first end, before settling towards the discharge screen and, thereafter being discharged through the apertures/openings of the discharge screen further away from the first end.

The feed/distribution region defined by the discharge screen may be divided into at least two regions/zones, a first feed/distribution zone and a second feed/distribution zone, which are arranged in series and are spaced along a travel direction of the screening belt/cloth in the separating region, with the first feed/distribution zone being closer to the first end of the discharge screen (i.e. closer to the discharge end of the separating region) than the second feed/distribution zone. The feed/distribution zones of the discharge screen may be divided by a divider formation(s), e.g. weir(s), baffle(s), partition(s) or wall(s). The discharge screen, together with the divider formation(s), may define at least two separate sections into which mixture can be fed, a first section and a second section, which correspond to the first and second feed/distribution zones, respectively. The first separating arrangement may be configured to discharge mixture onto the discharge screen in the first feed/distribution zone, i.e. into the first section. In use, as the mixture is fed onto the discharge screen in the first feed/distribution zone, the level of mixture in the first section may rise. The divider formation(s) may be accordingly configured such that, when the level in the first section reaches or exceeds a certain level, an operatively upper portion of the mixture from the first section flows over the divider formation into the second section. As mixture is introduced onto the discharge screen, the larger first solid components will tend to settle more quickly towards the discharge screen and/or flow through the apertures/openings of the discharge screen in the first feed/distribution zone, than the smaller second solid components. An operatively upper portion of the mixture in the first section will therefore tend to include more of the smaller second solid components which will subsequently flow into the second section when the level of mixture in the first section reaches or exceeds a certain level. Preferably, the discharge screen may be divided into four (or more) feed/distribution regions/zones which are arranged in series and are spaced along the travel direction of the screening belt/cloth in the separating region and which are divided from one another by divider formations (as described above).

In an alternative embodiment, the first separating arrangement may include a distributor arrangement into which the mixture is fed, before discharging it onto the discharge screen. The distributor arrangement may be in the form of a cyclonic separator which includes: a body defining a cavity into which the mixture is introduced during use; a first outlet which leads from the cavity to the first feed/distribution zone for discharging larger particles (i.e. the first solid components); and a second outlet which leads from the cavity to the second feed/distribution zone for discharging smaller particles (i.e. the second solid components). Alternatively, the cyclonic separator may be configured to discharge the mixture directly onto the separating region of the screening belt/cloth, with the first outlet discharging the mixture onto the separating region closer to the discharge end thereof than the second outlet. The cyclonic separator may be horizontally or vertically mounted.

In an alternative embodiment, the first separating arrangement may include a guide onto which the mixture is introduced during use, the guide defining a plurality of apertures which apertures are of a suitable size to permit the second solid components to pass therethrough and to impede the passage therethrough of the first solid components, wherein the guide is configured, in use, to guide part of the mixture which does not pass through the apertures of the guide onto either the separating region directly, closer to the discharge end thereof, or onto the discharge screen, closer to the first end thereof, than that part of the mixture which does pass through the apertures of the guide. The guide may be positioned directly above the separating region and/or the discharge screen. The first separating arrangement may include a drive mechanism which is connected to, and configured to displace, the guide along the separating region and/or the discharge screen. The guide, or at least part thereof, may be curved to help guide that part of the mixture which, in use, does not pass through the apertures of the guide, along a curved path, wherein at least a portion of the apertures defined by the guide are located in the curved part of the guide. More specifically, the at least part of the guide which is curved may be in the form of a so-called “sieve bend”. Alternatively, the guide may define a flat/planar surface onto which the mixture is introduced. The first separating arrangement may include a controller which is in communication with, and configured to control, the drive mechanism.

In accordance with another aspect of the invention there is provided a method of separating first solid particulate components from second solid particulate components having particle sizes which are smaller than that of the first solid components, wherein the first and second solid components are suspended in a liquid to form a mixture or slurry, the method including:

at least partially separating the first solid components from the second solid components in the mixture; and thereafter,

feeding the at least partially separated mixture onto an endless screening belt/cloth which is displaceable along a predetermined path, the screening belt/cloth defining a plurality of apertures which apertures are of a suitable size to permit the second solid components to pass therethrough and to impede the passage therethrough of the first solid components, the mixture being fed onto the screening belt/cloth in a separating region.

The step of at least partially separating the first solid components from the second solid components in the mixture may include separating the first and second solid components in a feeding/discharge region which is positioned directly above, and corresponds to, the separating region of the screening belt/cloth.

The step of feeding the mixture onto the screening belt/cloth may include feeding the at least partially separated first solid components closer to a discharge end of the separating region than the at least partially separated second solid components.

In accordance with another aspect of the invention there is provided a method of modifying a separation system for separating first solid particulate components from second solid particulate components having particle sizes which are smaller than that of the first solid components, wherein the first and second solid components are suspended in a liquid to form a mixture or slurry, the system including an endless screening belt/cloth which is displaceable along a predetermined path, the screening belt/cloth defining a plurality of apertures which apertures are of a suitable size to permit the second solid components to pass therethrough and to impede the passage therethrough of the first solid components, the method including installing a separation arrangement which is configured to receive mixture; at least partially separate the first solid components from the second solid components in the mixture; and feed/discharge

the at least partially separated mixture thereafter onto a separating region of the endless screening belt/cloth.

The method therefore includes installing an initial separation, or pre-classification, stage for at least partially separating the first solid components from the second solid components in the mixture, before feeding/discharging the mixture onto the endless screening belt/cloth for a second stage of separation.

BRIEF DESCRIPTION OF THE DRAWINGS

The invention will now be described, by way of example, with reference to the accompanying diagrammatic drawings. In the drawings:

Figure 1 shows a schematic side view of a separation system in accordance with the invention;

Figure 2 shows a schematic side view of a separating region of a screening cloth of a first separating arrangement of the separation system of Figure 1, when a mixture is fed onto the screening cloth;

Figure 3 shows a schematic sectional top view of the separation system of Figure 1;

Figure 4 shows a schematic side view of another separation system in accordance with the invention;

Figure 5 shows a schematic side view of another separation system in accordance with the invention;

Figure 6 shows sectional side view of a guide of a first separating arrangement of the separation system of Figure 5;

Figure 7 shows a schematic sectional top view of another separation system in accordance with the invention; and

Figure 8 shows an enlarged, plan view of the screening cloth.

DETAILED DESCRIPTION OF PREFERRED EMBODIMENT

In Figure 1, reference numeral 10 refers generally to a separation system in accordance with the invention. The separation system 10 is specifically adapted for separating first solid particulate components from second solid particulate components

which are mixed in a liquid (hereinafter referred to as the mixture 12), where the particle sizes of the second solid components are smaller than that of the first solid components. The separation system 10 includes a first separating arrangement 11 and a second separating arrangement 13 which is positioned below the first separating arrangement 11.

The second separating arrangement 13 includes an endless screening cloth 14 (a screening belt can also be used) which defines a plurality of apertures 16 which apertures 16 are of a suitable size to permit the second solid components and liquid to pass therethrough and to inhibit or impede the passage therethrough of the first solid components. As shown in Figure 8, the screening cloth 14 is made from a plurality of 0.8mm polyester strands 91 which are woven together and which together define the apertures 16. However, for the sake of clearly illustrating the working of the invention, the apertures 16 illustrated in Figures 1, 2, 4 and 5 are spaced relatively far apart. The specific dimensions of the screening cloth 14, more specifically the apertures 16, as well as the thickness of the strands, may vary depending on the particular application. The screening cloth 14 is fitted around a set of rollers 77.1, 77.2, 77.3 and is driven along a predetermined path in a first travel direction (illustrated by arrow 100) by a drive unit of which the roller 77.1 forms part. The screening cloth 14 passes through a horizontal separating region 18 in which the mixture 12 is introduced onto the screening cloth 14 during use. The screening cloth 14 in the separating region 18 is supported by a series of rollers 17 which rollers are positioned below the separating region 18 and spaced along the travel direction 100 of the screening cloth 14.

An “underpan” 42 is positioned below the separating region 18 in order to collect the liquid and second solid components which pass through the apertures 16 in the screening cloth 14. The separation system 10 also includes a chute 43 which is positioned at a discharge end 47 of the separating region 18 in order to collect the first solid components. Alternatively, the chute 43 can be positioned underneath the entire screening cloth 14 (below the underpan 42).

In one embodiment shown in Figures 1 and 3, the first separating arrangement 11, which can also be referred to as the feed distribution box, includes a feeding arrangement 46 having a distribution panel or discharge screen 21. The distribution

panel 21 is located directly above, and corresponds to, the separating region 18 of the screening cloth 14. More specifically, the distribution panel 21 extends in a plane which is generally parallel to the plane in which the separating region 18 extends, and covers a substantial portion of the separating region, when seen in top view (see Figure 3). The distribution panel 21 defines a feed/distribution region 25 and a plurality of apertures 27 which are located in the feed/distribution region 25. The apertures 27 are of a suitable size to permit the first and second solid components to pass therethrough and onto the separating region 18. The distribution panel 21 defines a first end 29 which corresponds to the discharge end 47 of the separating region 18 and includes an a mixture supply means provided at the first end 29, the mixture supply means including an opening 22 through which mixture 12 can be fed onto the feed/distribution region 25 (see arrow 119).

The feed/distribution region 25 is divided into four (or more) zones, first, second, third and fourth feed/distribution zones 31.1, 31.2, 31.3, 31.4, which are spaced along the travel direction 100 of the screening cloth 14, when seen in top view, with the first feed/distribution zone 31.1 being the zone closest to the first end 29 of the distribution panel 21. The four feed/distribution zones 31.1, 31.2, 31.3, 31.4 of the distribution panel 21 are separated by a number of divider formations in the form of baffles/weirs 33.1, 33.2, 33.3. The distribution panel 21, together with the baffles 33.1, 33.2, 33.3 and sidewalls of the feeding arrangement 46, may define four separate sections, first, second third and fourth sections 35.1, 35.2, 35.3, 35.4, into which mixture can be fed which correspond to the first, second third and fourth feed/distribution zones 31.1, 31.2, 31.3, 31.4, respectively.

In use, mixture 12 is fed onto the first feed/distribution zone 31.1 of the distribution panel 21 (i.e. into the first section 35.1). As mixture 12 is fed into the first feed/distribution zone 31.1, the level of mixture 12 in the first section 35.1 starts to rise. At least for a certain period of time, the rate by which mixture 12 is fed onto the first feed/distribution zone 31.1 is higher than the discharge rate of mixture through the apertures 27, thereby resulting in the rise of mixture 12 level. This can be controlled by means of rubber bungs (or similar devices) which can be used to close off at least some of the apertures 27. When the level of mixture in the first section 35.1 exceeds the height of baffle 31.1, an upper portion of the mixture 12 flows from the first section 35.1

over the baffle 31.1 into the second section 35.2. As the feeding of mixture 12 onto the first feed/distribution zone 31.1 continues, some of the mixture 12 flows in a similar fashion over the baffles 33.2 and 33.3 into the third and fourth sections 35.3 and 35.4. The baffles 33.1, 33.2, 33.3 are laid out in a cascaded fashion with the height of the baffle 33.2 being less than that of the baffle 33.1 and the height of the baffle 33.3 being less than that of baffle 33.2.

When mixture 12 is introduced onto the distribution panel 21, the larger particles tend to settle more quickly than the smaller particles. By discharging the mixture 12 into the first feed/distribution zone 31.1, the larger first solid components will therefore tend to settle more quickly and be discharged through the apertures 27 provided in the first feed/distribution zone 31.1, than the smaller second solid components. An operatively upper portion of the mixture 12 in the first section 35.1 will therefore tend to include more smaller particles, i.e. more of the smaller second solid components, which will subsequently flow over the baffle 33.1 into the second section 35.2, when the level of mixture 12 in the first section 35.1 exceeds the height of the baffle 33.1. In a similar fashion, some of the smaller particles in the mixture 12 will flow into the third and fourth sections 35.3, 35.4 respectively.

In another embodiment shown in Figure 4, the first separating arrangement 11 includes a distributor arrangement 41 which is positioned directly above the feeding arrangement 46 into which the mixture 12 is fed, before it is discharged onto the distribution panel 21. In this embodiment, the feeding arrangement 46 includes only one baffle 33 for separating the distribution panel 21 into first and second feed/distribution zones 31.1, 31.2. The distributor arrangement 41 is in the form of a cyclonic separator and includes a body 50 defining a cavity 51 and an inlet conduit 49 via which the mixture 12 is introduced into the cavity 51 during use. An operatively lower portion of the body 50 tapers into a narrowed first outlet 52 leading from the cavity 51 to the first feed/distribution zone 31.1. The distributor arrangement 41 also includes an outlet conduit 53 which leads from an operatively upper portion of the cavity 51 to the second feed/distribution zone 31.2. The cyclonic separator is configured to provide a cyclonic action within the cavity 51 during use, which causes the larger first solid components to migrate to an inner wall of the body 50 defining the cavity 51 and down towards the first outlet 52. The cyclonic action creates a central vortex which causes the smaller second

solid components to be displaced upwardly, through the outlet conduit 53 and onto the second feed/distribution zone 31.2. Cyclonic separators are well known and will therefore not be discussed in greater detail.

In another embodiment shown in Figure 5, the first separating arrangement 11 includes a guide 80 onto which the mixture 12 is introduced during use; and a feed conduit 81 via which the mixture 12 is introduced onto the guide 80. In this embodiment, the guide 80 is fixed relative to the distribution panel 21. However, in a slightly altered embodiment the first separating arrangement 11 may also include a drive mechanism which is drivingly connected to the guide 80 and which is configured to displace the guide 80 along the distribution panel 21. The guide 80 defines a plurality of apertures 87 (see Figure 6) which apertures 87 are of a suitable size to permit the second solid components to pass therethrough and to impede the passage therethrough of the first solid components. The guide 80 includes a curved body 88 which defines a curved guide path (illustrated by arrow 111). In use, part of the mixture which does not pass though the apertures 87, is guided along the guide path 111 and discharged closer to the first end 29 of the distribution panel 21 than that part of the mixture which does pass through the apertures 87 of the guide 80. The curved body 88 of the guide 80 may be in the form of a so-called “sieve bend”.

In another embodiment shown in Figure 7, the first separating arrangement 11 does not have any baffles, distribution arrangements or guides. The mixture is fed directly onto the distribution panel 21 from the first end 29 thereof. As already mentioned, when mixture 12 is introduced onto the distribution panel 21, the larger first solid components tend to settle more quickly than the smaller second solid components. Therefore, by feeding the mixture 12 onto the distribution panel 21 from the first end 29, the larger first solid components will tend to settle closer to the first end 29 and be discharged through the apertures 27 onto the separating region 18 closer to the discharge end 47 thereof, than the smaller second solid components which will tend to flow/travel further along the distribution panel 21, away from the first end 29, before they settle and are discharged through the apertures 27 of the distribution panel 21 further away from the first end 29.

Without a first separating arrangement 11, i.e. when mixture 12 is fed directly onto the screening cloth 14 in the separating region 18, some of the first solid components in the mixture 12 will sink down onto an operatively upper surface 23 of the screening cloth 14 in the separating region 18 and may end up covering/clogging some of the apertures 16, thereby inhibiting the flow of liquid and the passage of second solid components through those apertures 16. The clogging may occur over substantially the whole separating region 18 and may as a result inhibit effective separation.

The provision of the separating arrangement 11 results in the distribution of the slurry or mixture 12 more or less evenly across the width of the screening cloth 14. In addition, by introducing an initial separation stage, by means of the first separation arrangement 11, the larger first solid components can be at least partially separated from the smaller second solid components before the mixture 12 is fed onto the screening cloth 14. By then feeding the at least partially separated larger first solid components onto the screening cloth 14, closer to the discharge end 47 of the separating region 18 of the screening cloth 14, the discharge of liquid and second solid components though the apertures 16 of the screening cloth 14 in the rest of the separating region 18 (further away from the discharge end 47) will be more effective, since the amount of large first solid components in the said rest of the separating region 18 will be lower, therefore reducing the amount of clogged apertures 16 in this region. The clogging of the apertures 16 is therefore limited, to a large extent, to a portion of the screening cloth 14 in the separation region 18 close to a discharge end thereof. Furthermore, the first solid components can also be discharged into the chute 43 more quickly (the amount of time which a substantial portion of the first solid components spend on the screening cloth 14 is reduced, as it is discharged close to the discharge end 47 of the separation region 18), thereby unclogging some of the apertures 16 which may be clogged by those larger first solid components.

The Inventors believe that the separation system 10 in accordance with the invention provides an effective solution to the problems identified in the background of the specification, thereby promoting efficient separation.

CLAIMS:

1. A separation system for separating first solid particulate components from second solid particulate components having particle sizes which are smaller than that of the first solid components, wherein the first and second solid components are suspended in a liquid to form a mixture or slurry, the system including:

a first separating arrangement; and

a second separating arrangement which includes an endless screening belt/cloth which is displaceable along a predetermined path and which defines a plurality of apertures which apertures are of a suitable size to permit the second solid components to pass therethrough and to impede the passage therethrough of the first solid components, the screening belt/cloth having a separating region and the first separating arrangement being configured to receive the mixture, to at least partially separate the first solid components from the second solid components in the mixture and to feed the at least partially separated mixture onto the separating region of the endless screening belt/cloth.

2. The system of claim 1, wherein the screening belt/cloth is a screening belt which defines the plurality of apertures.

3. The system of any of the preceding claims, wherein the first separating arrangement is configured to feed a first portion of the at least partially separated first solid components onto the separating region of the screening belt/cloth closer to a discharge end of the separating region than the remainder of the mixture.

4. The system of claim 3, wherein the first separating arrangement is configured to separate the first solid components from the second solid components in a feed/distribution region which corresponds to the separating region of the screening belt/cloth.

5. The system of claim 4, wherein the first separating arrangement includes a feeding arrangement which defines the feed/distribution region, the feed/distribution region being located directly above the separating region.

6. The system of claim 5, wherein the feed/distribution region covers substantially the whole separating region, when seen in top view.

7. The system of claim 5 or claim 6, wherein the feeding arrangement includes a discharge screen which defines the feed/distribution region, the discharge screen defining a plurality of apertures/openings which apertures/openings are of a suitable size to permit the first and second solid components to pass therethrough and onto the separating region of the second separating arrangement.

8. The system of claim 7, wherein the first separating arrangement includes a mixture supply means which is configured to feed mixture onto the discharge screen from a first end thereof, wherein the first end corresponds to the discharge end of the separating region.

9. The system of claim 8, wherein the mixture supply means is configured to feed mixture onto the discharge screen from the first end thereof in a direction which is substantially opposite a travel direction of the screening belt/cloth in the separating region, when seen in top view.

10. The system of claim 8 or claim 9, wherein the feed/distribution region defined by the discharge screen is divided into at least two zones, a first feed/distribution zone and a second feed/distribution zone, which are arranged in series and are spaced along a/the travel direction of the screening belt/cloth in the separating region, with the first feed/distribution zone being closer to the first end of the discharge screen than the second feed/distribution zone.

11. The system of claim 10, wherein the feed/distribution zones of the discharge screen are divided by a divider formation.

12. The system of claim 11, wherein the discharge screen, together with the divider formation, defines at least two separate sections into which mixture can be fed, a first section and a second section, which correspond to the first and second feed/distribution zones, respectively.

13. The system of claim 12, wherein the first separating arrangement is configured to discharge mixture onto the discharge screen in the first feed/distribution zone.

14. The system of claim 13, wherein the divider formation is configured such that, when the level in the first section reaches or exceeds a certain level, an operatively upper portion of the mixture from the first section flows over the divider formation into the second section.

15. The system of claim 10, wherein the discharge screen is divided into four feed/distribution regions/zones which are arranged in series and are spaced along the travel direction of the screening belt/cloth in the separating region and which are divided from one other by divider formations.

16. The system of claim 10, wherein the first separating arrangement includes a distributor arrangement into which the mixture is fed, before discharging it onto the discharge screen, wherein the distributor arrangement is in the form of a cyclonic separator which includes: a body defining a cavity into which the mixture is introduced during use; a first outlet which leads from the cavity to the first feed/distribution zone for discharging larger particles; and a second outlet which leads from the cavity to the second feed/distribution zone for discharging smaller particles

17. The system of claim 3, wherein the first separating arrangement includes a distributor arrangement into which the mixture is fed, wherein the distributor arrangement is in the form of a cyclonic separator which includes: a body defining a cavity into which the mixture is introduced during use; a first outlet which leads from the

cavity for discharging larger particles; and a second outlet which leads from the cavity for discharging smaller particles,

wherein the cyclonic separator is configured to discharge the mixture onto the separating region of the screening belt/cloth, with the first outlet discharging the mixture onto the separating region closer to the discharge end thereof than the second outlet.

18. The system of claim 16 or claim 17, wherein the cyclonic separator is vertically mounted.

19. The system of claim 3, wherein the first separating arrangement includes a guide onto which the mixture is introduced during use, the guide defining a plurality of apertures which apertures are of a suitable size to permit the second solid components to pass therethrough and to impede the passage therethrough of the first solid components, wherein the guide is configured, in use, to guide part of the mixture which does not pass through the apertures of the guide onto the separating region, closer to the discharge end thereof than that part of the mixture which does pass through the apertures of the guide.

20. The system of claim 19, wherein the guide is positioned directly above the separating region.

21. The system of claim 19 or claim 20, wherein the first separating arrangement includes a drive mechanism which is connected to, and configured to displace, the guide along the separating region.

22. The system of claim 7, wherein the first separating arrangement includes a guide onto which the mixture is introduced during use, the guide defining a plurality of apertures which apertures are of a suitable size to permit the second solid components to pass therethrough and to impede the passage therethrough of the first solid components, wherein the guide is configured, in use, to guide part of the mixture which does not pass through the apertures of the guide onto the discharge screen, closer to a first end thereof, than that part of the mixture which does pass through the apertures of

the guide, wherein the first end corresponds to the discharge end of the separating region.

23. The system of claim 22, wherein the guide is positioned directly above the discharge screen.

24. The system of claim 22 or claim 23, wherein the first separating arrangement includes a drive mechanism which is connected to, and configured to displace, the guide along the discharge screen.

25. The system of claim 21 or claim 24, wherein the first separating arrangement includes a controller which is in communication with, and configured to control, the drive mechanism.

26. The system of any of claims 19 to 25, wherein the guide, or at least part thereof, is curved to help guide that part of the mixture which, in use, does not pass through the apertures of the guide, along a curved path, wherein at least a portion of the apertures defined by the guide are located in the curved part of the guide.

27. The system of any of claims 19 to 25, wherein the guide defines a flat/planar surface onto which the mixture is introduced.

28. A method of separating first solid particulate components from second solid particulate components having particle sizes which are smaller than that of the first solid components, wherein the first and second solid components are suspended in a liquid to form a mixture or slurry, the method including:

at least partially separating the first solid components from the second solid components in the mixture; and thereafter,

feeding the at least partially separated mixture onto an endless screening belt/cloth which is displaceable along a predetermined path, the screening belt/cloth defining a plurality of apertures which apertures are of a suitable size to permit the

second solid components to pass therethrough and to impede the passage therethrough of the first solid components, the mixture being fed onto the screening belt/cloth in a separating region.

29. The method of claim 28, wherein the step of at least partially separating the first solid components from the second solid components in the mixture includes separating the first and second solid components in a discharge region which is positioned directly above, and corresponds to, the separating region of the screening belt/cloth.

30. The method of claim 19 or claim 29, wherein the step of feeding the mixture onto the screening belt/cloth includes feeding the at least partially separated first solid components closer to a discharge end of the separating region than the at least partially separated second solid components.

31. A method of modifying a separation system for separating first solid particulate components from second solid particulate components having particle sizes which are smaller than that of the first solid components, wherein the first and second solid components are suspended in a liquid to form a mixture or slurry, the system including an endless screening belt/cloth which is displaceable along a predetermined path, the screening belt/cloth defining a plurality of apertures which apertures are of a suitable size to permit the second solid components to pass therethrough and to impede the passage therethrough of the first solid components, the method including installing a separation arrangement which is configured to receive mixture; at least partially separate the first solid components from the second solid components in the mixture; and feed/discharge the at least partially separated mixture thereafter onto a separating region of the endless screening belt/cloth.

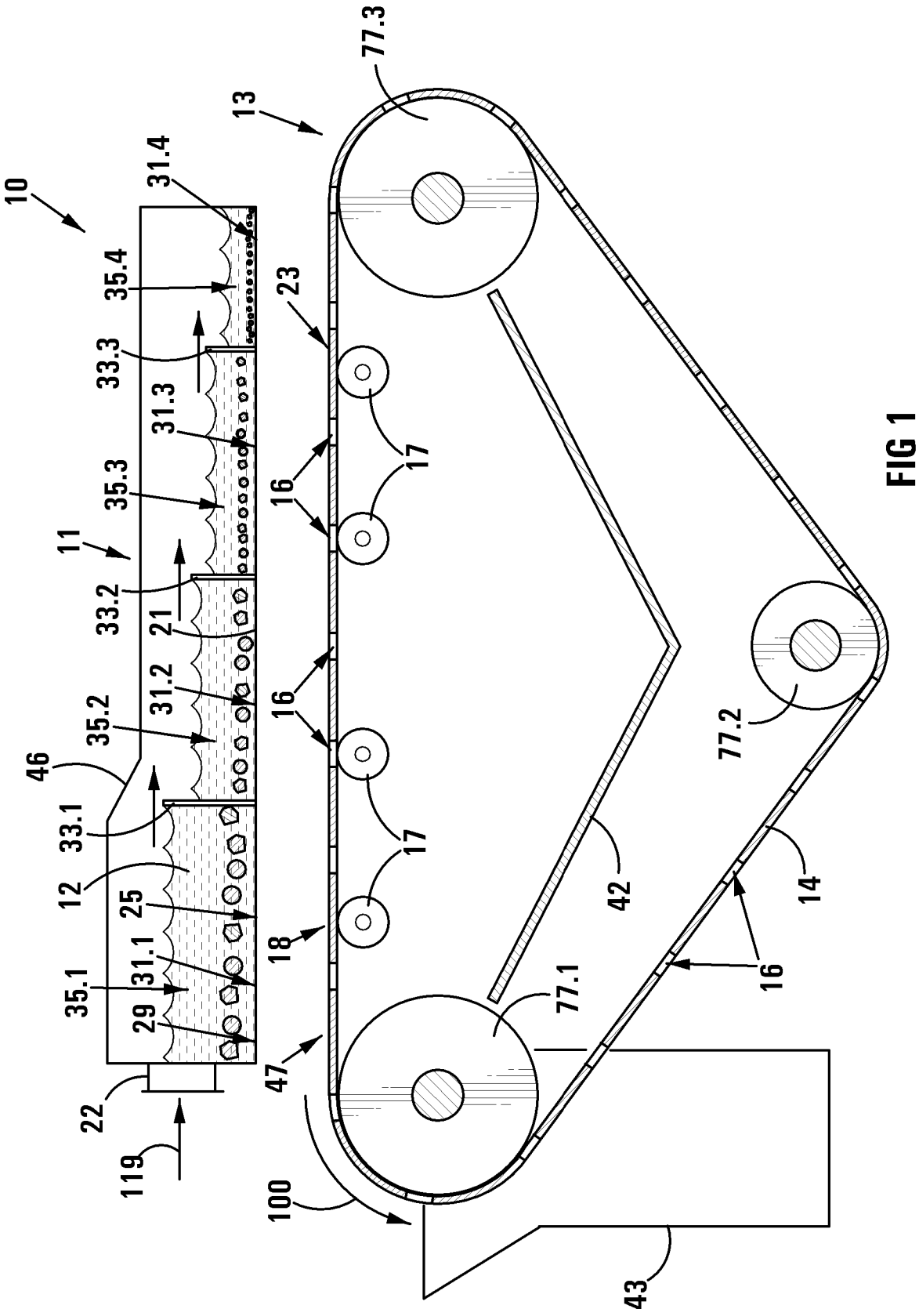
10
11
12
13
14
16
17
18
21
22
23
25
29
31.1
31.2
31.3
31.4
33.1
33.2
33.3
35.1
35.2
35.3
35.4
42
43
46
47
77.1
77.2
77.3
100
119

FIG 1

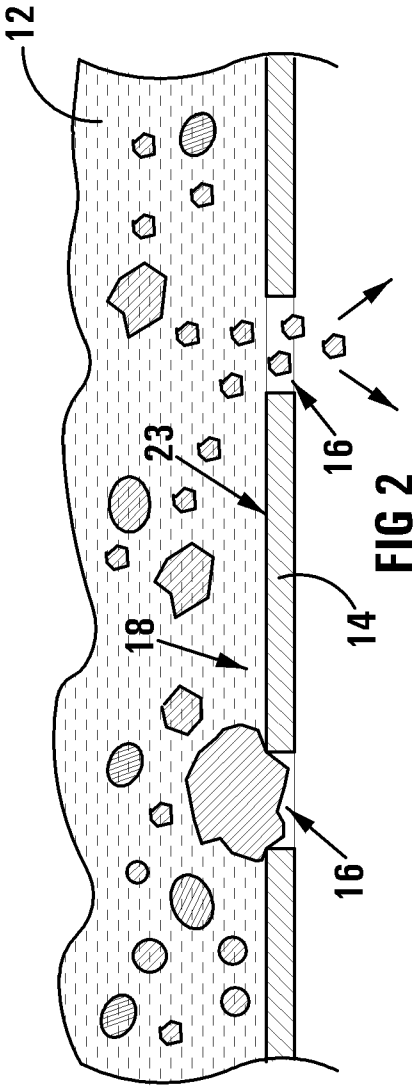
12
23
18
16
14
16

FIG 2

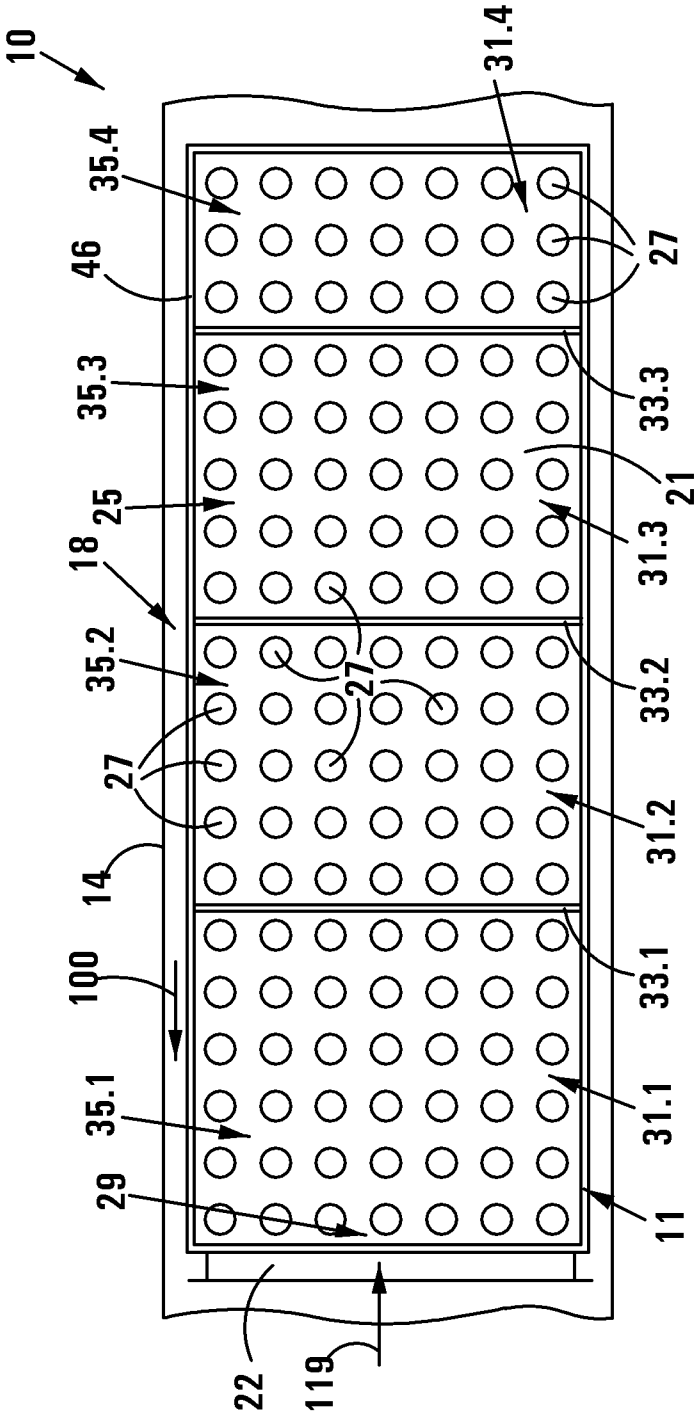
10
31.4
35.4
46
27
35.3
33.3
25
21
18
31.3
35.2
33.2
27
27
31.2
14
100
33.1
35.1
31.1
29
11
22
119

FIG 3

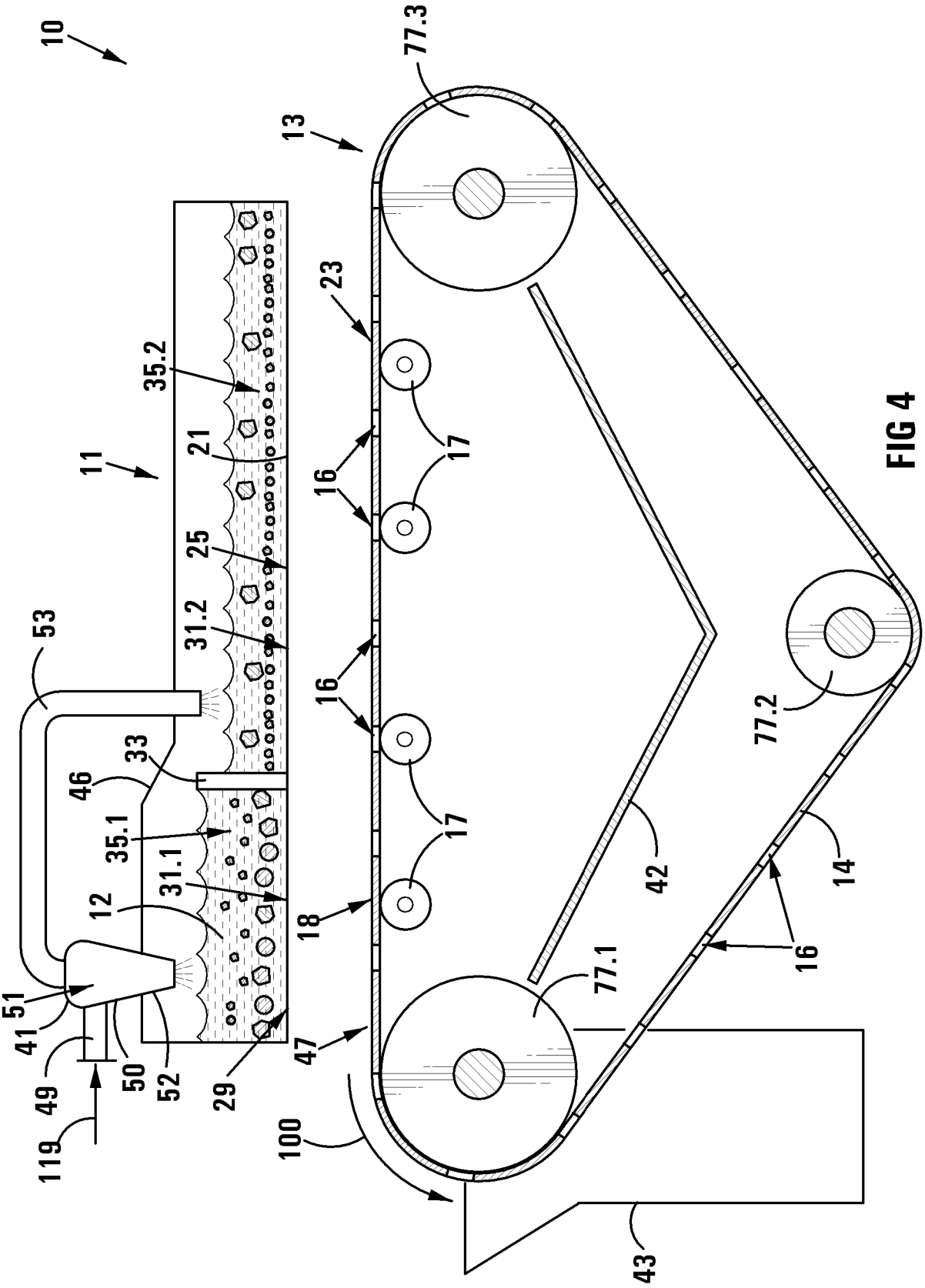
10
11
12
13
14
16
17
18
21
23
25
29
31.1
31.2
33
35.1
35.2
41
42
43
46
47
49
50
51
52
53
77.1
77.2
77.3
100
119

FIG 4

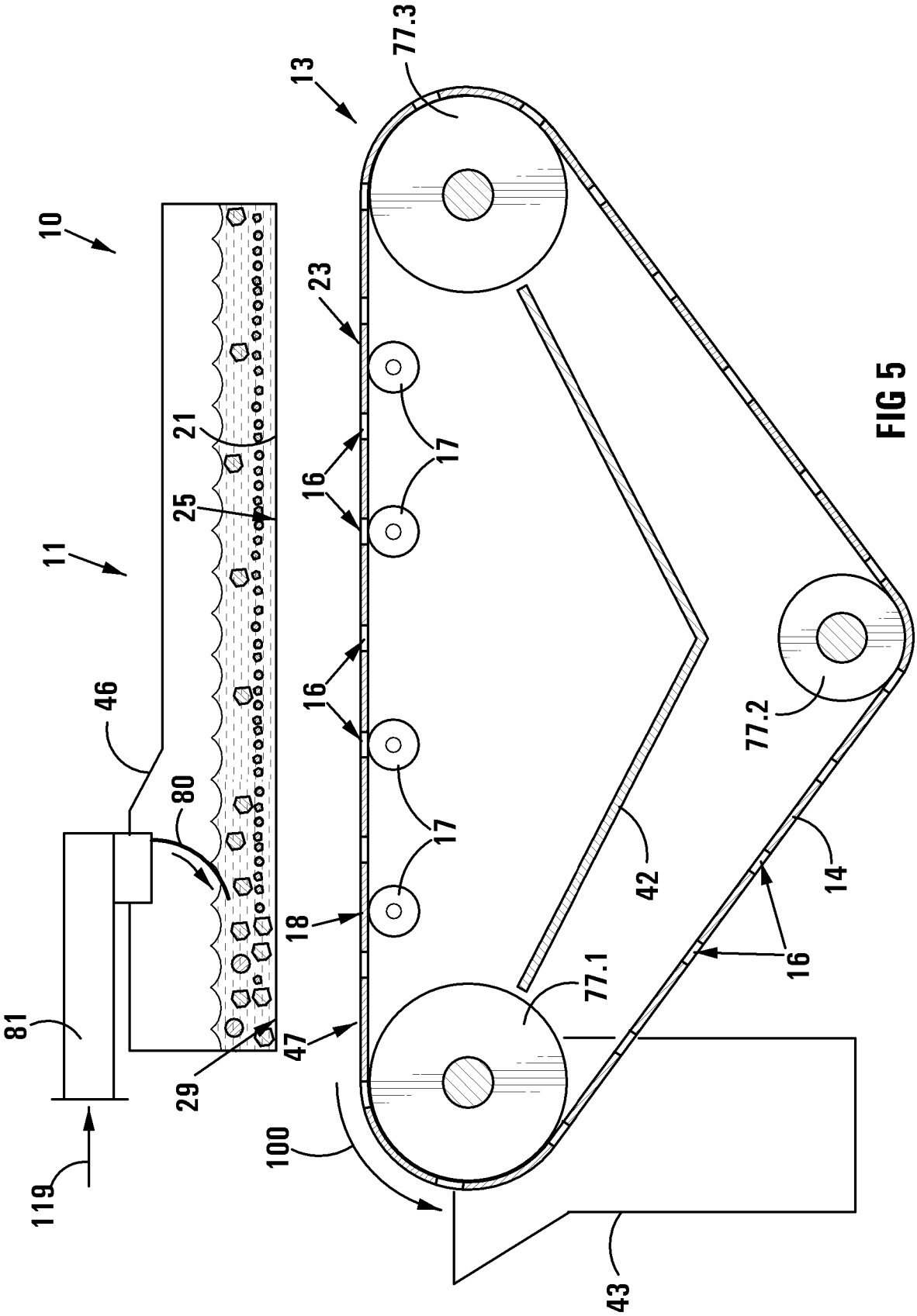

FIG 5

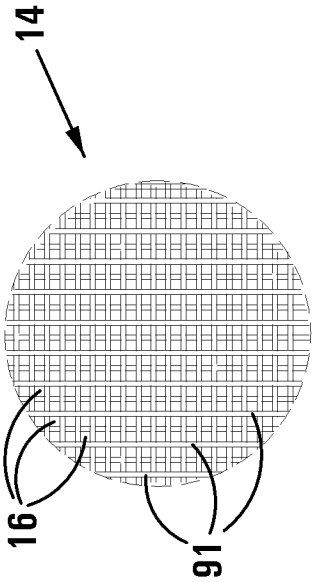

FIG 8

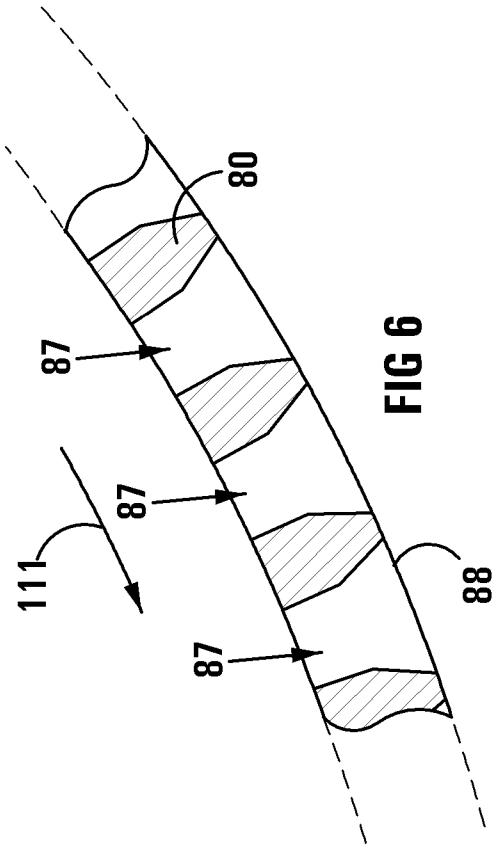

FIG 6

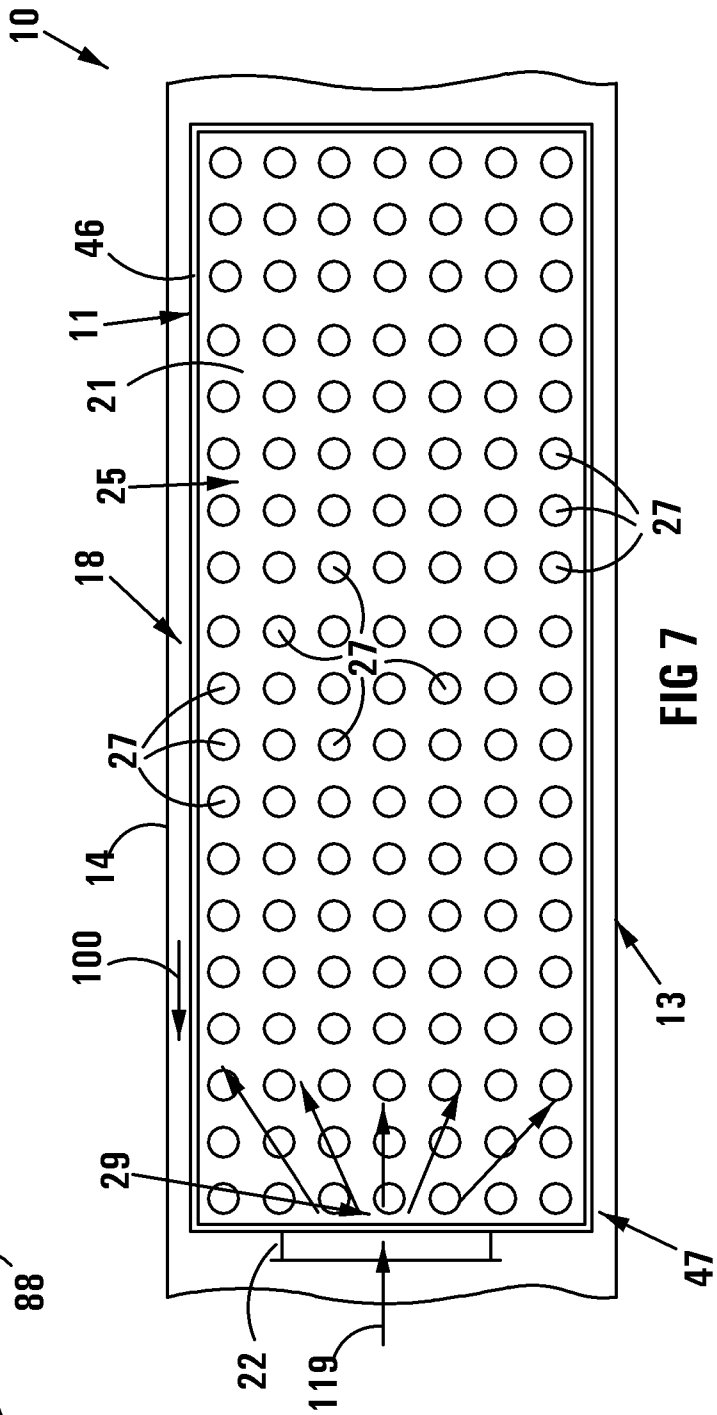

FIG 7