N. E. NASH.

HEAT REGULATING APPARATUS.

APPLICATION FILED NOV. 19, 1914.

1,189,613. Patented July 4, 1916.

2 SHEETS—SHEET 1.

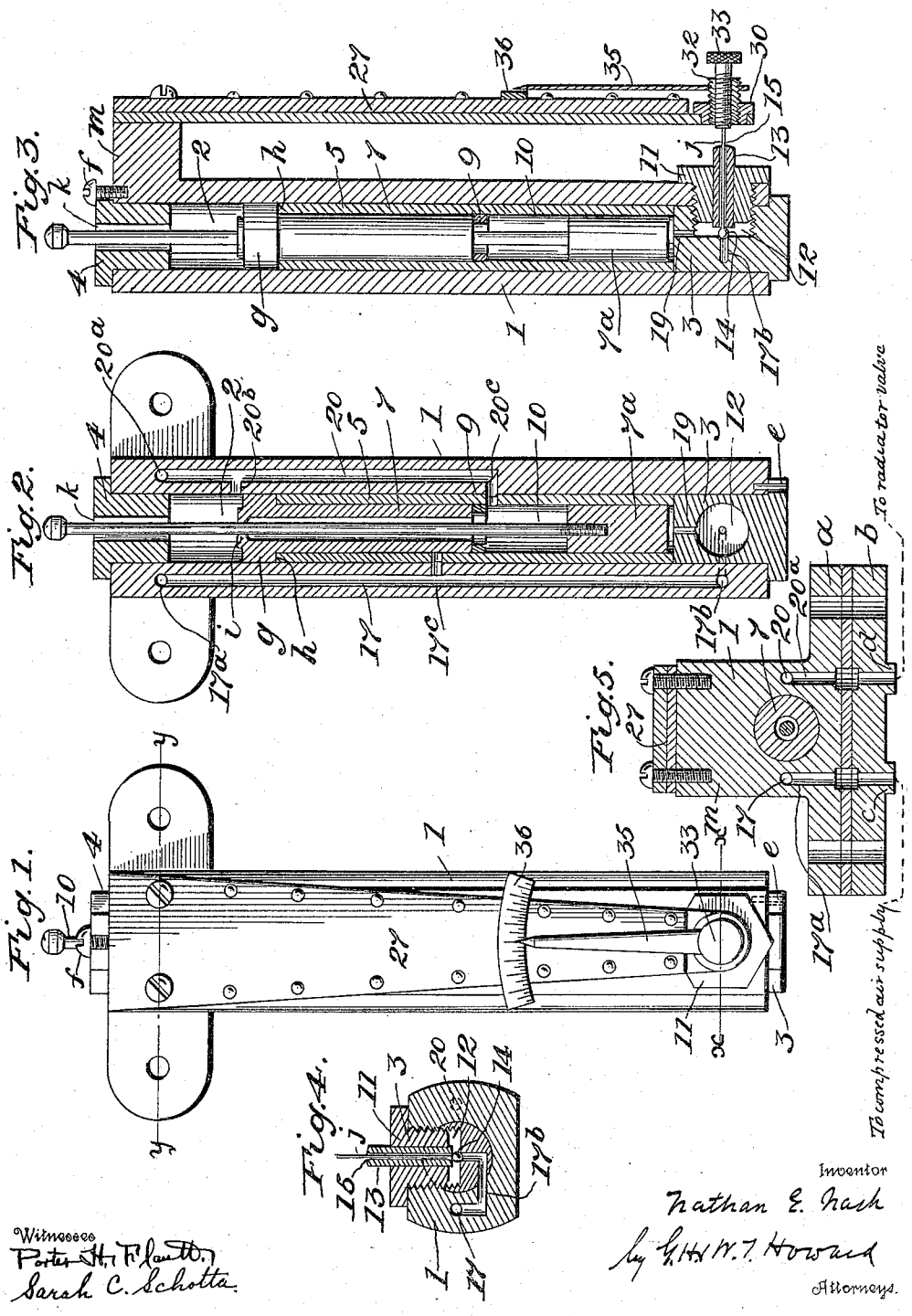

Witnesses
Porter H. Flautt
Sarah C. Schotta

Inventor
Nathan E. Nash
by G. H. & W. T. Howard
Attorneys.

THE NORRIS PETERS CO., PHOTO-LITHO. WASHINGTON, D. C.

N. E. NASH.

HEAT REGULATING APPARATUS.

APPLICATION FILED NOV. 19, 1914.

1,189,613.

Patented July 4, 1916.

2 SHEETS—SHEET 2.

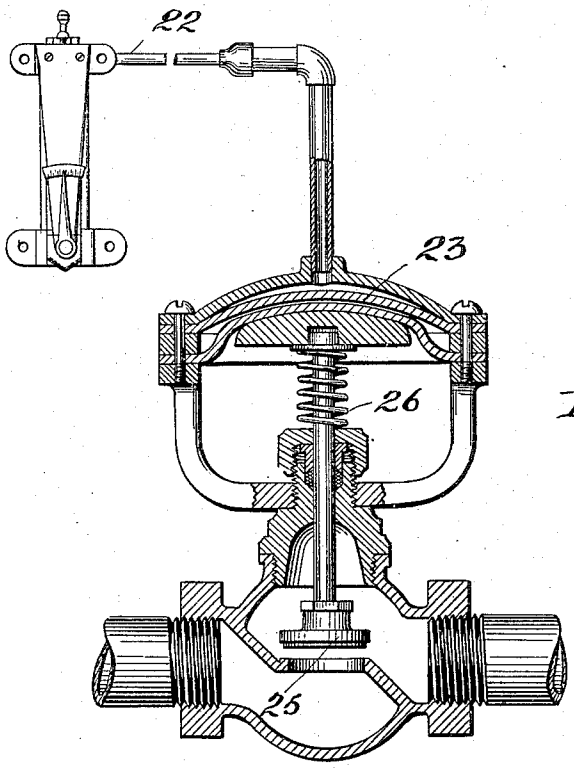

Fig. 6.

Witnesses
F. B. Wooden,
Sarah L. Schotta.

Inventor
Nathan E. Nash,
by G. H. & N. T. Howard,
Attorneys.

THE NORRIS PETERS CO., PHOTO-LITHO., WASHINGTON, D. C.

UNITED STATES PATENT OFFICE.

NATHAN E. NASH, OF TORONTO, ONTARIO, CANADA.

HEAT-REGULATING APPARATUS.

1,189,613. Specification of Letters Patent. Patented July 4, 1916.

Application filed November 19, 1914. Serial No. 873,065.

To all whom it may concern:

Be it known that I, NATHAN E. NASH, a citizen of the United States of America, and residing at Toronto, in the Province of Ontario, Dominion of Canada, have invented certain Improvements in Heat-Regulating Apparatus, of which the following is a specification.

This invention relates to certain improvements in the invention shown and described in Letters Patent No. 1,124,788, granted to me on the 12th day of January, 1915, for improvements in heat-regulating apparatus, to which reference should be made.

In the description of the said invention which follows, reference is made to the accompanying drawings, forming a part hereof, and in which:—

Figure 1 is an exterior face view of the improved heat-regulating apparatus, and Fig. 2 a sectional face view of the same. Fig. 3 is a central vertical section of Fig. 1, and Fig. 4 a section taken on the broken line *x* in Fig. 1. Fig. 5 is a section of Fig. 1 taken on the broken line *y*—*y*. Fig. 6 is a partly sectional view showing the heat regulating apparatus as applied to an ordinary radiator valve.

Referring now to the drawings, 1 is the shell of the apparatus which for convenience in its manufacture, is preferably constructed in two parts, *a* and *b* (see Fig. 5) secured together by bolts not shown, with a joint-forming gasket between them. The part *b* serves as a foundation for the part *a*, and is provided with the nozzles *c* and *d* for connection with certain pipes hereinafter referred to.

The shell 1 is bored to a uniform diameter from end to end, to produce the cylinder 2, and into its lower end is tightly forced the plug 3 which, to prevent its being turned independently of the shell, is fitted with the pin *e* shown only in Figs. 1 and 2.

In the upper end of the cylinder 2 is the centrally bored plug 4 which is held in place by the screw *f* shown only in Figs. 1 and 3.

5 is a bored sleeve driven tightly into the cylinder 2 with its lower end in contact with the plug 3.

7 is a vertically moving piston with its upper part *g* turned to fit the cylinder 2, and its lower and smaller part turned to fit the sleeve 5. The annular surface *h* of the piston is adapted when the piston is in its lowest position, to bear upon and form a joint with the upper end of the sleeve 5.

9 is a fixed ring which is driven tightly into the sleeve 5 to form a seat for the lower and smaller part of the piston 7 at the time that a tight joint is produced between the annular surface *h* of the piston and the upper end of the sleeve 5. By this construction two seats for the piston are produced, an arrangement which is necessary to the proper operation of the apparatus, as hereinafter described.

As it would be practically impossible to make the piston come in contact with both of the seats described, should machining only be depended upon, I effect that result by driving the ring 9 down by means of the piston until the annular surface *h* of the piston is properly seated on the upper end of the sleeve.

7ª is a second piston in the sleeve 5, situated a proper vertical distance below the first, and connected to it by means of the rod 10 which extends loosely through the major part of the first piston, and is soldered or otherwise tightly fastened to its upper end as at *i*.

The shell 1 and the plug 3 are transversely bored to a proper depth, and into the cavity thereby formed, is screwed the flanged plug 11, the inner end of which is removed a sufficient distance from the bottom of the cavity to produce the valve chamber 12.

13 is a small bored plug which is driven into the flanged screw plug 11, through which extends the stem *j* of the double faced valve 14; and the inner diameter of the driven plug 13 is considerably greater than the stem in order to produce the annular vent 15.

From the foregoing description it will be understood that the valve 14 has an upper and a lower seat, the former being at the end of the plug 13, and the latter at the bottom of the valve chamber 12 where it controls a passage leading thereto as hereinafter described, and the vertical movement of the valve in its motion from one seat to the other is accurately adjusted by driving down the plug 13 which being tight in the outer plug 11 offers sufficient resistance to keep it in place after its adjustment.

17 is a passage within, and extending longitudinally of the wall of the shell 1, with

a branch 17^a leading rearward and terminating at the nozzle c which is connected to the pipe 19 (shown only in Fig. 6) which is in communication with a source of supply of air under pressure. The passage 17 has also a second passage 17^b in communication with the valve chamber 12 as shown in Figs. 2, 3 and 4; and a third branch 17^c which extends to the interior of the sleeve 5 and is at times covered by the piston 7 as shown in Fig. 2.

19 is a duct which unites the valve chamber 12 with the interior of the sleeve at a point below the piston 7^a as shown in Figs. 2 and 3.

20 is another passage in the wall of the shell 1, situated diametrically opposite the passage 17, with a rearward branch 20^a leading to the nozzle d (shown in Fig. 5) to which is connected the pipe 22 in communication with the space above the diaphragm 23 (see Fig. 6) the depression of which closes the valve 25 which controls the admission of steam to a radiator, the said valve being opened when the air pressure on the diaphragm is reduced, by means of the compressed spring 26.

The radiator valve and its connections are shown only in Fig. 6 of the drawings, and as their construction is well known in the art, their further description is unnecessary.

The passage 20 has a second branch 20^b which, when the piston 7 is in the position shown in the drawings, is in communication with the interior of the cylinder 2, and with the outer air by means of the annular space k around the rod 10 in the plug 4; and a third branch 20^c in communication with the interior of the sleeve 5 at a point immediately below the ring 9, and between the pistons 7 and 7^a.

It will be understood that the piston 7 does not fit tightly in the cylinder 2 and the sleeve 5, but is sufficiently loose to admit of its fall by gravity; and that should its lower end not be seated on the ring 9 simultaneously with the seating of the part g on the upper end of the sleeve 5, air from the branch passage 17^c would leak around the piston and pass through the ring to the branch passage 20^c, thence through the passages 20 and 20^b to the cylinder 2 at a point above the piston, which is open to the atmosphere, and escape.

27 is a thermostatic blade secured by screws to a lug m on the shell 1. It is constructed as is usual in such devices, of two plates securely fastened together, the inner plate being of brass, and the outer plate of steel, or some other material having a less degree of extension than brass when both are heated to a common temperature.

In view of the construction of the blade as described, the blade if straight at a certain temperature, will curve inward should the temperature of the surrounding air be lowered; and curved outward if the temperature be raised; and the function of the said blade is to alternately depress and release the stem j of the valve 14 in any fluctuation in the temperature of the room in which the apparatus is situated.

The free end of the thermostatic blade 27 is provided with a fixed bushing 30 into which is screwed an externally threaded thimble 32 carrying a hand-operated adjusting screw 33 the lower end of which is adapted in certain circumstances hereinafter described, to rest on the end of the valve stem j or be elevated and removed from it.

35 is a pointer rigidly attached to the thimble 32 which is used in connection with a graduated sector 36 on the blade (see Figs. 1 and 3) to indicate a nice adjustment of the screw 33, with respect to the valve stem j.

Supposing the temperature of the room in which the apparatus is placed to be at the desired temperature of say, 70 degrees, the various parts of the apparatus will be in the positions shown in the drawings, and all communication between the source of supply of compressed air and the valve chamber 12 is cut off; and as the duct 19 is in communication with the outer air by way of the vent 15 there is nothing to prevent the connected pistons 7 and 7^a retaining their lowest position by the force of gravity.

At the same time the radiator valve 25 will be held open by the compressed spring 26 as the space above the diaphragm is open to the outer air by way of the pipe 22, the branch passage 20^a, the passage 20 the branch passage 20^b and the annular space k in the plug 4 around the rod 10.

Should the temperature of the room rise to say 71 degrees, the thermostatic blade will bend or curve outward carrying with it the end of the screw 33 which then leaves the stem j and its valve 14 will admit compressed air to the chamber 12 and close the vent 15. The compressed air will at the same time pass through the duct 19 and lift the connected pistons 7 and 7^a to their highest position thus uncovering the branch passage 17^c, and covering the branch passage 20^b. The compressed air will then enter the space between the two pistons and pass thence to branch 20^c, the passage 20 and the branch passage 21^a to the pipe 22 which terminates at the space above the diaphragm 23, and that device will be forced down in opposition to the compressed spring 26 and the radiator valve closed. The radiator will then cool, and upon the temperature in the room falling to 70 degrees, a reverse action of the apparatus will take place and the movable parts thereof be restored to their original positions as shown in the drawings and held thereat until the temperature falls

slightly below 70 degrees, when the operation above described will be repeated.

I claim as my invention:—

1. In a heat-regulating apparatus, a shell bored to produce a cylinder which at its upper end is open to the atmosphere and at its lower end in communication with a valve chamber which at times is open to the atmosphere, and comprising a bored sleeve with an inner annular valve seat, the wall of the said shell having a passage leading to a source of air under pressure and provided with branches one of which leads to the said valve chamber, and the other to the interior of the sleeve at a point between the said annular valve seat and the valve chamber, combined with a ring which is tight within the sleeve, and a piston situated within the cylinder, adapted at its upper end to rest on the annular valve seat and thereby close the sleeve, and at its lower end to rest on the ring, the double seating of the piston being effected simultaneously.

2. In a heat-regulating apparatus, a shell bored to produce a cylinder which at the upper end is open to the atmosphere, and at its lower end in communication with a valve chamber which at times is open to the atmosphere and comprising a bored sleeve with an inner annular valve seat, the wall of the said shell being provided with a passage leading to a source of air under pressure and provided with branches one of which leads to a valve chamber which at times is open to the atmosphere, and the other to the interior of the sleeve, combined with a ring which is tight within the sleeve, a piston within the cylinder adapted at its upper end to seat on the sleeve and close the same, and at its lower end to seat on the ring, the double seating of the piston being effected simultaneously, a second piston, which is also within the sleeve below and spaced from the first, and a rod which connects the two pistons.

3. In a heat-regulating apparatus, a shell bored to produce a cylinder which at its upper end is open to the atmosphere, and at its lower end in communication with a valve chamber which at times is open to the atmosphere, and comprising a bored sleeve with an inner annular valve seat, the wall of the shell being provided with a passage leading to a diaphragm which together with a spring controls the opening and closing of a radiator valve, the said passage having branches one of which leads to the said cylinder, the other to the interior of the sleeve, combined with a ring which is tight within the sleeve and a piston within the cylinder adapted at its upper end to rest on the sleeve and close the same, and at its lower end to rest on the ring, the double seating of the piston being effected simultaneously.

4. In a heat-regulating apparatus, a shell bored to produce a cylinder which at its upper end is open to the atmosphere, and at its lower end is in communication with a valve chamber which at times is open to the atmosphere, and comprising a bored sleeve, the wall of the shell being provided with a passage leading to a diaphragm which together with a spring controls the opening and closing of a radiator valve, the said passage having branches one of which leads to the said cylinder and the other to the interior of the sleeve, combined with a ring which is tight within the sleeve, a piston within the cylinder adapted at its upper end to rest on the sleeve and close the same, and at its lower end to rest on the ring, the double seating of the piston being effected simultaneously, a second piston which is within the sleeve and below and spaced from the first, and a rod which connects the two pistons.

5. In a heat-regulating apparatus, a shell bored to produce a cylinder which at its upper end is open to the atmosphere, and at its lower end in communication with a valve chamber which at times is open to the atmosphere, and comprising a bored sleeve with an inner annular valve seat, the wall of the said shell having a passage leading to a source of air under pressure and provided with branches one of which leads to the said valve chamber, and the other to the interior of the sleeve at a point between the said annular valve seat and the valve chamber combined with a ring which is tight within the sleeve, a piston situated within the cylinder, adapted at its upper end to rest on the valve seat and thereby close the sleeve, and at its lower end to rest on the ring, the double seating of the piston being effected simultaneously, and a thermostatic blade to control the opening and closing of a valve in the said valve chamber, substantially as, and for the purpose specified.

NATHAN E. NASH.

Witnesses:
J. F. LUCAS,
JAS. FINDLAY.

Copies of this patent may be obtained for five cents each, by addressing the "Commissioner of Patents, Washington, D. C."