United States Patent [19]

Ricke

[11] **3,893,197**

[45] **July 8, 1975**

[54] **HOSPITAL BED FOOTBOARD ASSEMBLY**

[76] Inventor: **Maurine E. Ricke,** 153 Smith Rd., Danville, Calif. 94526

[22] Filed: **Feb. 11, 1974**

[21] Appl. No.: **441,560**

[52] **U.S. Cl.** ..... **5/327 R;** 5/319

[51] **Int. Cl.** **A47c 21/00**

[58] **Field of Search** .... 5/317 R, 319, 327 R, 327 B; 297/423, 425, 429, 431, 433, 437

[56] **References Cited**

UNITED STATES PATENTS

1,067,733	7/1913	Hassel	5/319
1,404,448	1/1922	Kroupa	5/327 B
2,720,878	10/1955	Hickman	5/327 R
3,626,524	12/1971	Minton	5/327 R

Primary Examiner—Paul R. Gilliam
Assistant Examiner—Andrew M. Calvert
Attorney, Agent, or Firm—Harris Zimmerman

[57] **ABSTRACT**

A footboard assembly for use with a bed to provide support and positioning of the feet of a bedridden person including a pair of brackets adapted for mounting on opposite side rails of a bed frame, near the foot of the bed. Extending upwardly from the brackets are a pair of tubular vertical support arms, with a foot-supporting panel extending therebetween over the bed. Each bracket includes a C-channel member which receives the bed frame within its cavity. A bolt received through one of a plurality of holes in the web of the C-channel member clamps the bed rail between a portion of the bolt head and the web, with the shank of the bolt disposed adjacent the lower edge of the bed rail. The bolt head is cut chordally to fit flush with the inner surface of the flange of the C-channel member. The plurality of holes permits the assembly to be clamped to beds of varying rail configuration.

4 Claims, 7 Drawing Figures

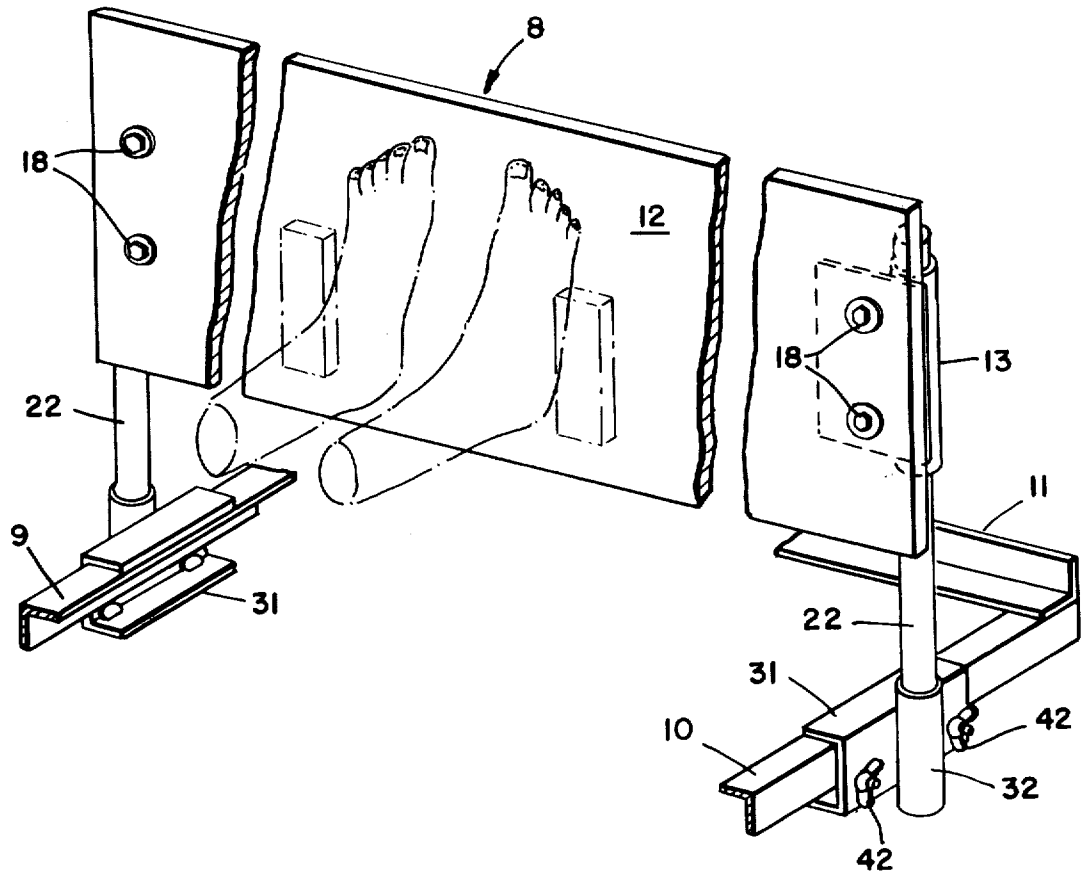

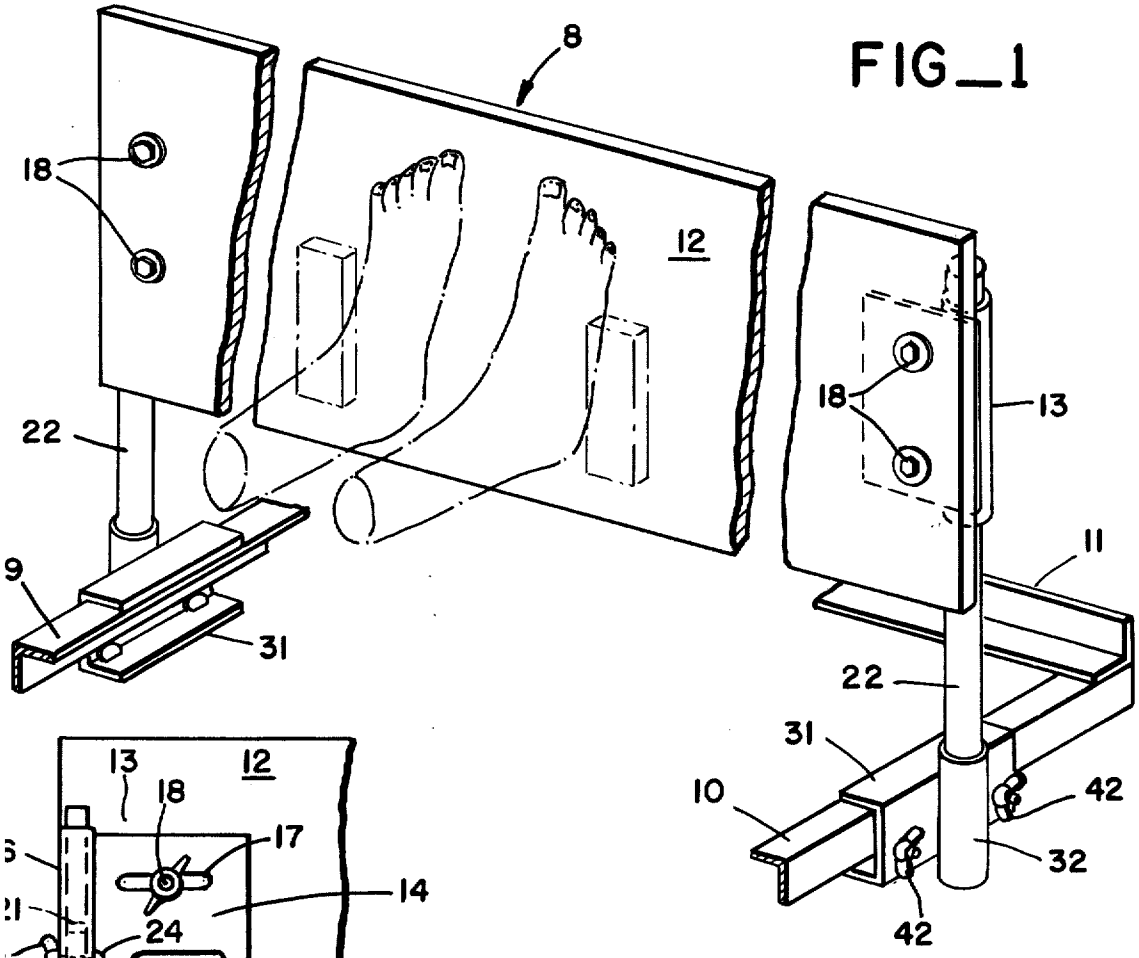

FIG_1

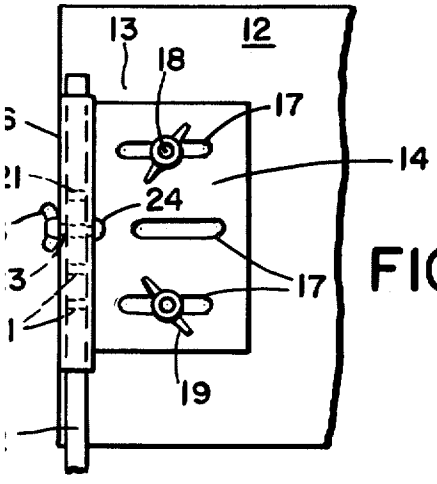

FIG_2

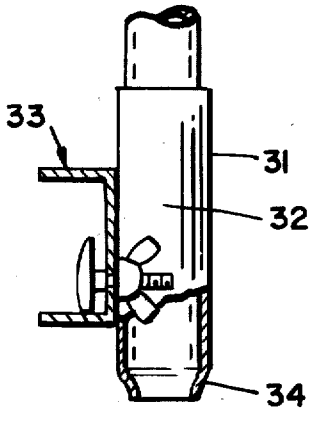

FIG_3

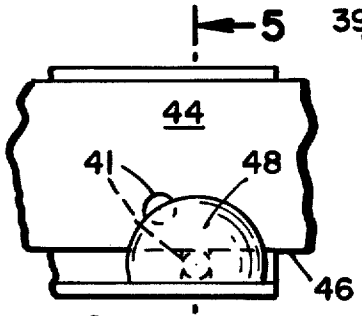

FIG_4

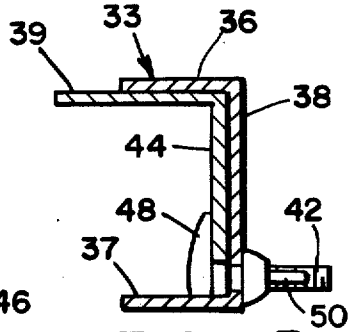

FIG_5

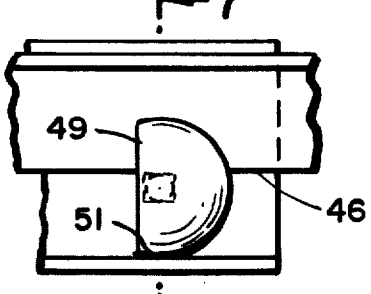

FIG_6

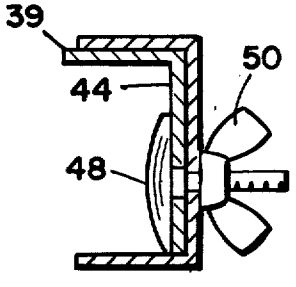

FIG_7

HOSPITAL BED FOOTBOARD ASSEMBLY

BACKGROUND OF THE INVENTION

For a person who must be confined to a bed for an extended period of time, a footboard assembly is often employed to provide necessary positioning and support of the legs of the bedridden person. The feet of a person lying in bed on her back will normally extend obliquely from the legs, as opposed to extending generally perpendicularly from the legs when she is standing. It has been found that when the foot remains relaxed in the obliquely extending position for long periods of time, as is the case for a bedridden patient, the muscles of both the legs and feet undergo a deleterious deterioration. To prevent this occurrence, devices have been designed for use with hospital beds which maintain the feet and legs in positions which allow the muscles to be suitably conditioned to make up for their lack of proper exercise.

In the prior art, these devices have taken the form of footrests supported on a bed and selectively movable between beds. These footrests have had in common the failure to accommodate hospital beds of differing configurations, constructions, and dimensions. The differences, such as the width of the frame and springs, the nature of the frame rails, the configuration of the safety rails, and the like, have accounted for the fact that many prior art footrests cannot be secured to various hospital beds with the rigidity required to provide stimulation to the legs and feet of the bedridden person. For example, some footrests are provided with clamping brackets which accommodate a variety of bed frame members, yet do not clamp effectively to any of them.

SUMMARY OF THE INVENTION

The present invention provides a footboard assembly which is quickly and securely fastened to beds of differing widths, and furthermore includes a novel bracket which accommodates and fastens the footboard assembly to various bed side rails commonly in use. The invention generally comprises a footboard extending across the foot of a bed and adjustably supported at the ends by bolts received in a pair of footboard brackets. The footboard brackets include tubular portions in which a pair of vertical supports are received and secured by bolts received in one of a plurality of vertically spaced holes in the vertical supports. The vertical supports are secured to a pair of bed rail brackets. Each rail bracket includes a lateral C-channel member which receives a portion of the bed rail between its flanges with the upper flange resting on the bedrail. A bolt passing through one of a plurality of holes in the web of the C-channel member clamps a portion of the bed rail between the channel web and the bolt head. The bolt is secured with a quickly removable wing nut, and the bolt head is trimmed chordally to fit flush with the lower flange of the C-channel member. The plurality of holes in the web permits the bolt to clamp to bed rails of various sizes and configurations.

THE DRAWING

FIG. 1 is a perspective view of the present invention installed on a bed.

FIG. 2 is a front elevation of a portion of the assembly shown in FIG. 1, showing the mounting means for securing the footboard to the vertical support.

FIG. 3 is a front elevation of a portion of the invention shown in FIG. 1, detailing the bed rail bracket.

FIG. 4 is a side elevation of a portion of a further embodiment of the bed rail bracket.

FIG. 5 is a cross-sectional elevation taken along line 5—5 of FIG. 4.

FIG. 6 is a side elevation of a portion of the bed rail bracket depicted in FIG. 3.

FIG. 7 is a cross-sectional elevation taken along line 7—7 of FIG. 6.

DESCRIPTION OF THE PREFERRED EMBODIMENT

As depicted in the drawing, there is shown in FIG. 1 a footboard assembly **8** mounted on spaced, longitudinal bed rail members **9** and **10** of a bed frame **11.** Although the footboard assembly will be described with reference to mounting on bed rails which comprise a channel member having a laterally extending portion and a vertically extending portion, it should be noted that the present invention is not limited in application to this type of bed side rail.

The footboard assembly **8** includes a footboard **12** extending laterally across the end of the bed frame **11** for supporting the feet and legs of a person in repose on the bed. As described in the foregoing, the footboard positions the feet to maintain desirable muscle tone in the feet and legs of a bedridden person. At either end the footboard is adjustably secured to a footboard bracket **13.** As shown in FIG. **2,** each bracket **13** comprises a plate **14** joined at one edge to a tubular member **16.** The plate **14** includes lateral slots **17** for receiving bolts **18** therethrough, the bolts extending through holes in the footboard and secured with wing nuts **19.**

The tubular member **16** includes a plurality of vertically spaced lateral holes **21** therethrough. Received within the tubular member **16** is a vertical support **22,** which comprises a vertically extending tube with a single lateral hole **23** through the upper extremity thereof. A bolt **24** extending through one of the holes **21** and hole **23** and secured with a wing nut **26** supports the end of the footboard. It may be appreciated that the appropriate hole **21** may be chosen so that the footboard is disposed at the optimum height above the bed frame and mattress. In this manner the assembly may be adjusted to the differing height configurations of various beds and to the comfort of the bedridden person. Furthermore, the slots **17** in conjunction with the bolts **18** permit the assembly to be adjusted in width to accommodate various bed width configurations.

A pair of vertical supports **22** are provided to engage brackets **13** and support both ends of the footboard. A pair of bed rail brackets **31** which clamp to the bed rails **9** and **10** are provided to rigidly retain the vertical supports **22.** As shown in FIG. **3,** each bed rail bracket comprises a vertically aligned tubular member **32** which is welded or otherwise joined to a laterally disposed C-channel member **33.** The tubular member **32** which receives the vertical support **22** includes an inwardly directed radial shoulder **34** at the lower end which establishes a seat for the lower end of the vertical support **22.**

The C-channel member **33** comprises upper and lower lateral flanges **36** and **37** joined by a vertical web **38** therebetween. When the footboard assembly is installed on a bed, the brackets **31** are disposed so that

the upper flange **36** bears on the lateral surface **39** of the bed rail. A plurality of holes **41** extending through the web **38** are provided, with bolts **42** extending through selected holes **41**.

It should be noted that commonly used bed frames are frequently fabricated of "angle iron" channel stock, which comprises the lateral portion **39** joined to a vertically extending portion **44**. However, the width of the portion **39** and the vertical dimension of the portion **44** varies from bed to bed, according to the particular channel stock used by the manufacturer of the bed. This may be readily apparent by referring to the channel stock depicted in FIGS. **4** and **5**, as compared with the channel stock shown in FIGS. **6** and **7**.

To accommodate the various channel stock which comprises the bed side rails, the holes **41** are positioned in the web so that each pair of holes is disposed adjacent to the lower edge **46** of one of the commonly used channel members when the upper flange **36** is resting on the lateral portion **36** of the channel. The bed rail bracket is thereby easily clamped to the bed side rail by passing a pair of bolts **42** through the appropriate pair of holes so that the bolt shanks are adjacent lower edge **46**. A wing nut **50** tightened onto each bolt causes the rail portion **44** to be clamped tightly between the bolt head **48** and the web **38**.

The bolt head **48**, which is of large diameter and rounded, is modified to further facilitate easy installation and removal of the footboard assembly. The head **48** is trimmed along chordal line **49**, so that the chordal side is adjacent and abuts the lower flange **37** when the bolt is disposed in the lowest hole. The bolt is prevented by the flange from rotating as the wing nut is tightened thereon. To provide the same effect when the bolt is disposed in other of the holes **41**, the bolt head may be trimmed along another chordal line **51** as shown in FIGS. **6** and **7**, and as many more chordal lines as are appropriate for the plurality of holes **41**.

Thus it may be appreciated that the brackets **31** clamp effectively to the side rails of a bed, and that they accommodate a variety of side rail configurations. Further, the brackets can be easily loosened and slid along the side rails to position the footboard assembly in the optimum position for therapeutic treatment of the feet and legs of the bedridden person. And, the present invention as described in the foregoing is easily adjustable both in width and in height above the bed frame.

I claim:

1. A foot support assembly for beds, comprising a pair of support brackets for mounting on opposite side rails of a bed frame, each support bracket including a channel member with an upper flange and a lower flange extending equally from a medial web and defining therebetween a cavity for receiving a side rail of the bed, a plurality of holes disposed in said web, at least one bolt received through one of said plurality of holes in said web and secured thereto for clamping the bed side rail between a portion of the head of said bolt and said web; each of said support brackets including a vertically disposed tubular member secured to said web; a pair of support arms each received in said tubular member and supported thereby, and a foot support member extending between said support arms and secured thereto.

2. The foot support assembly of claim **1**, wherein said head of said bolt comprises a generally circular member including a chordal surface for abutting one of said flanges of said support bracket in non-rotating fashion.

3. The foot support assembly of claim **2**, wherein said plurality of holes are varyingly spaced from said lower flange to accommodate differing bed side rails, and said bolt head includes a plurality of chordal surfaces, each adapted to abut one of said flanges with said bolt disposed in a selected one of said plurality of holes.

4. The foot support assembly of claim **2**, wherein each of said support arms includes a plurality of vertically spaced apertures through the upper extremity thereof, and said foot support member includes bolt means at each end thereof for engaging one of said apertures.

* * * * *