W. L. BLISS.

CARBON PILE SUPPORT.

APPLICATION FILED JUNE 5, 1916.

1,259,206. Patented Mar. 12, 1918.

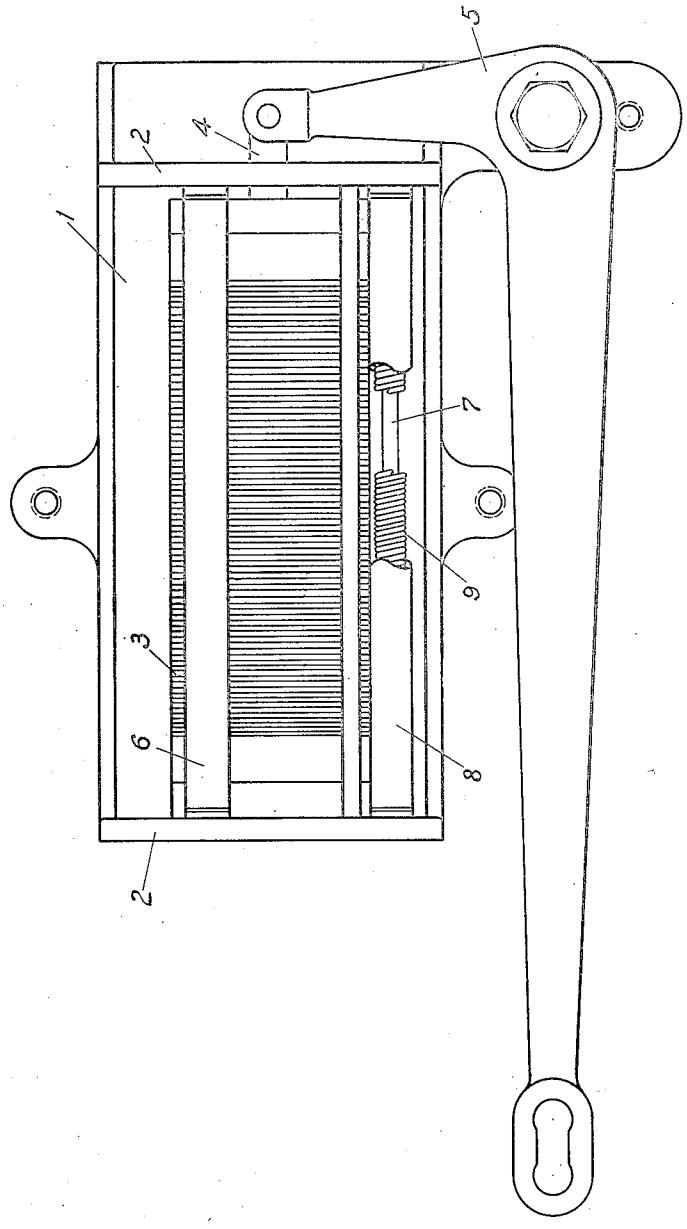

Inventor

William L. Bliss

Witnesses

David H. Tinkler

Ralph Munden

By Raymond H. Van Vest

Attorney

UNITED STATES PATENT OFFICE.

WILLIAM L. BLISS, OF NIAGARA FALLS, NEW YORK, ASSIGNOR TO U. S. LIGHT & HEAT CORPORATION, OF NIAGARA FALLS, NEW YORK, A CORPORATION OF NEW YORK.

CARBON-PILE SUPPORT.

1,259,206. Specification of Letters Patent. **Patented Mar. 12, 1918.**

Application filed June 5, 1916. Serial No. 101,814.

To all whom it may concern:

Be it known that I, WILLIAM L. BLISS, a citizen of the United States, residing at Niagara Falls, in the county of Niagara and State of New York, have invented new and useful Improvements in Carbon-Pile Supports, of which the following is a specification.

The present invention relates to carbon pile supports.

In the carbon piles used in electric regulators, it is common to provide a series of superposed carbon disks arranged in a column and supported by longitudinal supporting bars. The present invention relates to such supporting bars.

An object of the present invention is to provide a member which will provide sufficient rigidity, will offer a minimum of resistance to movement of the carbon disks and will accommodate itself to changes in temperature.

A further object is to provide a support which is simple in construction and cheap to manufacture.

Further objects will be apparent as the description proceeds.

The one figure of the drawing shows the present invention applied to a carbon pile regulator.

The numeral 1 indicates a base portion on opposite ends of which are bracket members 2. The carbon pile 3 has its resistance increased or decreased, according to the pressure exerted upon one end thereof by the thrust pin 4, which is pivotally mounted on the bell crank lever 5.

The supporting member, which constitutes the subject-matter of the present invention, is indicated by the numeral 6. A plurality of said members 6 are provided around the periphery of the carbon pile to keep the disks in alinement. Each of the supports 6 is made up as follows. An iron rod 7 is supported at each end by bracket members 2. Surrounding each iron rod 7 is a glass tube 8, having an inside diameter greater than the outside diameter of the rod 7. Located between said rod and said glass tube is a helically wound wire bushing 9 which snugly fits both of said members.

By using the helically wound wire bushing 9, all the irregularities in diameter of the rod and the glass tube are compensated for, the wire bushing having sufficient flexibility to conform to said irregularities. Furthermore, as the iron rod 7 and the glass tube 8 tend to expand in different degrees under the temperatures often encountered in electric regulators, the flexible bushing will give slightly to permit such expansion without breakage.

One embodiment of the present invention has been described in detail. Various modifications may occur to those skilled in the art. It is desired to cover in this case all such modifications as fall within the scope of the invention as defined by the appended claims.

Having described my invention, what I claim as new and desire to secure by Letters Patent of the United States is:

1. In a supporting member, in combination, a rod, a helically wound wire bushing on said rod, and a tube on said bushing.

2. In a supporting member, in combination, a supporting rod, a tube surrounding same, and a bushing of flexible material between said rod and said tube.

3. In a supporting member, in combination, a supporting rod, a tube surrounding same, and a wire bushing between said rod and said tube.

In witness whereof, I have hereunto subscribed my name.

WILLIAM L. BLISS.