June 18, 1940. O. MAXIMILIAN 2,204,763

ENVELOPE OPENER

Filed Sept. 22, 1938

Fig. 1.

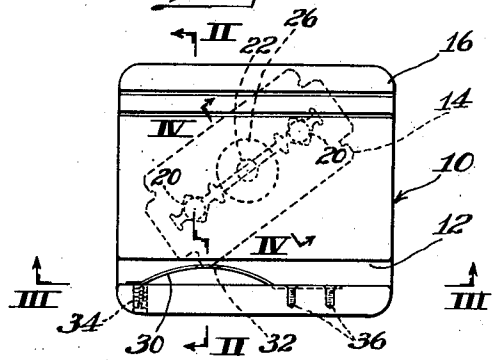

Fig. 2.

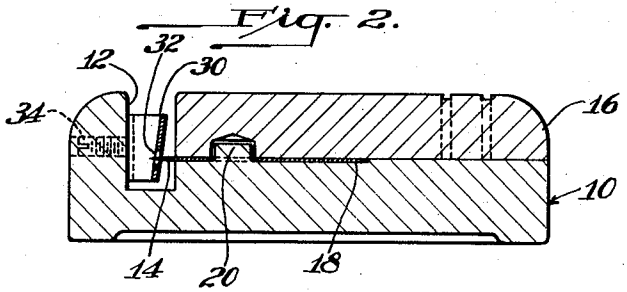

Fig. 3.

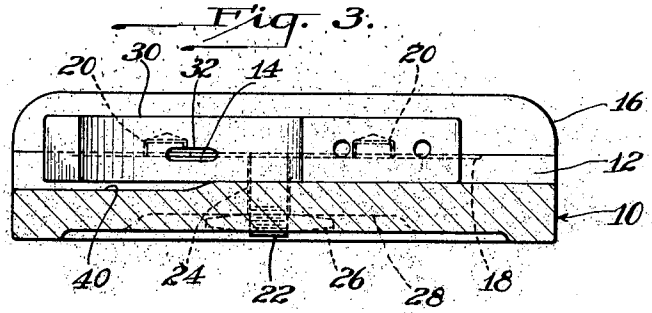

Fig. 4.

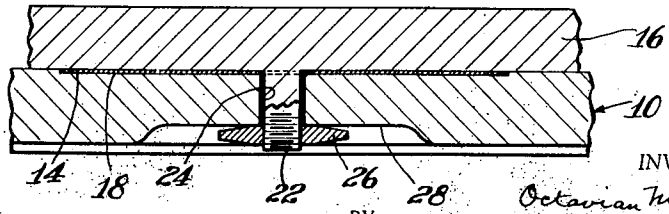

WITNESSES
A. B. Wallace.
A. H. Oldham

INVENTOR.
Octavian Maximilian
BY
Brown, Critchlow & Flick
his ATTORNEYS.

Patented June 18, 1940

2,204,763

UNITED STATES PATENT OFFICE

2,204,763

ENVELOPE OPENER

Octavian Maximilian, Pittsburgh, Pa.

Application September 22, 1938, Serial No. 231,192

8 Claims. (Cl. 30—289)

This invention relates to cutting devices, and more particularly is concerned with the provision of an improved apparatus for facilitating the opening of envelopes or the like.

It is the general object of my invention to provide a relatively inexpensive, easily operated cutting device for facilitating the opening of envelopes or the like.

Another object of my invention is to provide an envelope opener including a readily replaceable blade, such as a razor blade, and which can be made in the form of a paper weight or can be associated with various other devices usually found on the top of a desk or in a writing cabinet, and whereby envelopes can be readily slit open.

Another object of my invention is the provision of a simple cutting apparatus for opening envelopes, wherein a cut is made through one side only of the envelope along its edge when the envelope is drawn through the device.

Another and more specific object of my invention is the provision of an envelope opener of the type described, wherein the depth of cut can be readily adjusted.

Another specific object of my invention is to provide an envelope opener wherein the parts are so proportioned and arranged that in the movement of an envelope through the apparatus the edge of the envelope is held in proper cutting relation at all times and there is no binding.

The foregoing and other objects of my invention are achieved by the provision of apparatus for opening an envelope or the like, which apparatus comprises a block having a groove extending the full length of one surface thereof, and a substantially flat cutting blade removably carried by the block with a cutting edge extending into the groove in a position substantially parallel with the bottom of the groove and inclined to the side wall thereof. Associated with the groove and secured to the side wall thereof opposite the blade is a ribbon spring having a narrow slot into which the cutting edge of the blade extends, and adjustable means are provided for controlling the distance that the cutting edge of the blade extends into the slot in the spring. The spring is tilted to form an angle greater than 90° with the bottom of the blade so as to hold an envelope down in proper cutting relationship with the blade, and preferably the groove in the block is formed deeper beyond the slot in the spring in the direction of movement of an envelope through the groove. Forming the slot deeper prevents binding of an envelope during its movement past the cutting blade.

For a better understanding of my invention reference should be had to the accompanying drawing wherein Fig. 1 is a plan view of one typical embodiment of my invention; Fig. 2 is a transverse sectional view taken on line II—II of Fig. 1 and illustrating the parts on a larger scale; Fig. 3 is a longitudinal sectional view taken on line III—III of Fig. 1 and likewise illustrating the parts on a larger scale; and Fig. 4 is a fragmentary cross-sectional view taken on line IV—IV of Fig. 1 and illustrating the parts on the same scale as Figs. 2 and 3.

As indicated above, my improved cutting device, which is particularly adapted for use as an envelope opener, can be embodied with or formed as a part of any standard desk or writing implement. For example, it can be made as a part of a base for a fountain pen support or as a part of a blotter holder. However, for the sake of simplification I have illustrated my improved envelope opener as comprising a separate instrumentality which may, if desired, have the added function of serving as a paper weight. Thus, while my invention has been particularly illustrated in one specific form, it should be understood that this is merely in accordance with the patent statutes, and that various modifications or embodiments of the principles of my advance in the art can be made without departing from the scope of my invention, all as defined in the appended claims.

Specifically referring to the embodiment of my invention illustrated, the numeral 10 indicates as a whole a base or block which is formed with a longitudinally extending groove 12 of substantially the extent and dimensions shown in Figs. 1 to 3 of the drawing. The block 10 releasably carries a cutting blade so that the cutting edge of the blade extends into the groove 12 in a position parallel to the bottom thereof and with the cutting edge inclined to a side wall of the groove. Preferably the angle of inclination is between about 30° and about 40° with the side wall of the groove. The cutting blade can be made in any of a plurality of shapes or sizes, as will be understood, but conveniently comprises a razor blade, as indicated at 14. The razor blade 14 may be held in the stated position by any of a plurality of quickly releasable means, and one satisfactory manner of achieving this desired result is to form the block 10 with a removable upper portion 16. In other words, the block 10 at one side of the groove 12 is split on a horizontal plane. Actual-

ly, in the usual manufacture of an envelope opener of the specific form described, the block 10 and the removable upper part 16 thereof are molded in separate pieces, but of such a configuration that when joined together as hereinafter described they will appear to form a solid block. The upper surface of the block 10, which is in engagement with the portion 16, is recessed as at 18 to receive the razor blade 14 so that the upper surface of the blade is substantially flush with the upper surface of the block. Likewise, one or more, and usually two, studs 20 are formed integrally with the block 10 in the recess 18 so that the studs 20 pass through the holes in the ends of the razor blade to hold the blade rigidly in the recess 18. The portion 16 is suitably recessed to receive the ends of the studs 20, as will be evident.

In order to clamp the portion 16 of the block in place and to thereby hold the razor blade 14 in its recess 18 and over the studs 20, a threaded stud or screw, shown at 22, is secured to or molded in the portion 16 so that the stud extends down through a suitable hole 24 in the block 10 and removably carries a tightening nut 26 which is received in a recess 28 formed in the bottom of the block 10.

A ribbon spring 30 is secured to the side of the groove 12 opposite the blade 14 and, as shown particularly in Fig. 1, is formed with a bowed portion which extends resiliently into proximity to the blade 14. The bowed portion of the spring 30 is provided with a narrow longitudinally extending slot 32 into which the cutting edge of the blade 14 extends, as will be clearly seen in Figs. 1 to 3. Means preferably are associated with the spring 30 or the blade 14 so that the distance that the cutting edge of the blade extends into the slot 32 can be readily adjusted. These means, in the one form of my invention shown, have been conveniently illustrated as comprising a screw 34 which is received in a suitably tapped opening extending through the wall of the block 10 at the side of the groove 12 remote from the blade 14. Turning the screw 34 into or out of its opening moves the end of the spring 30 and thus changes the amount that the cutting blade extends into the slot 32. The other end of the spring 30 is secured to the side wall of the groove 12 in any desired manner. In production and where the parts of the block 10 are molded from a plastic material, the end of the spring 30 may be fastened to the groove by forming extensions on the spring which are embedded in the material of the block 10 during the actual molding operation. On the other hand, I may secure the end of the spring to the side wall of the groove 12 by screws which are indicated at 36.

Where envelopes of all substantially one thickness are operated on I may dispense with the adjusting screw 34. Again, I may form the studs 20 of a smaller transverse section so that the nut 26 can be loosened and the blade 14 moved farther into or out of the slot and thereby effect adjustment after which the nut 26 is again tightened.

An important part of my inventive concept is the tilting of the spring 30 with relation to the plane of the cutting blade 14, and this tilting is clearly illustrated in Fig. 2 of the drawing. As shown therein, the plane of the cutting blade 14 makes an angle greater than 90° with the side of the spring, and this arrangement of parts, I have found, insures that the edge of an envelope to be cut is held down toward the bottom of the groove 12 or directly against the bottom during its movement between the spring and the cutting blade. In other words, the envelope does not pop out from between the spring and the cutting blade when the envelope has been pulled only partway through the apparatus.

Preferably I relieve the surfaces of the groove 12 at and beyond the cutting portion of the blade 14 in the direction of movement of an envelope through the groove. More particularly, as seen in Fig. 3, the bottom of the groove 12 is cut deeper, as at 40, at a point beyond the slot 32 in the spring 30. This prevents binding of the cutting device in use, if, for example, the strip of material cut tends to expand or wander out of its normal position after or even during the cutting.

In the operation of the apparatus as just described, an envelope is moved longitudinally through the groove 12 with the edge of the envelope passing between the bowed portion of the spring 30 and the cutting edge of the blade 14. In this passage of the envelope between the bowed portion of the spring and the blade, the envelope is supported on the spring 30 on both sides of the blade 14 and in a direction opposed to the cutting thrust of the blade. The tension or thrust of the spring can be controlled by adjusting the screw 34 so that envelopes of any thickness can be readily cut, and, moreover, the spring adapts the apparatus to successful cutting operations on envelopes of varying thickness, as will be evident. The depth of the cut effected by the cutting blade can also be controlled by the adjustment of the screw 34, and I have found that I am able to cut through only one side of the envelope, which I believe to be an advantage. This is because the contents of the envelope are in no way damaged by a cut of this character, and furthermore because no narrow cut edges of the envelope drop to the floor after cutting to litter the floor. Again, the screw 34 can be adjusted to effect a deeper cut, if this be desired, so that the entire edge of the envelope can be trimmed off. Usually, the cut is made so near to the edge of the envelope that the contents of the envelope are not in any way affected. In the cutting operation the inclined or tilted position of the spring 30, as particularly shown in Fig. 2, holds the envelope down in the groove 12 during the cutting of the full length of the envelope, all as heretofore explained. If the cutting blade becomes dull it is a simple matter to remove nut 26 and lift off the top portion 16 of the block so that the razor blade 14 can be turned to present another cutting edge or corner, or so that a new razor blade can be substituted for the old one.

From the foregoing it will be recognized that the objects of my invention have been achieved by the provision of a relatively simple, inexpensive and easily operated apparatus for trimming or cutting, and particularly adapted for opening envelopes. The apparatus employs a standard razor blade so that the cutting blade may always be sharp and satisfactory. The apparatus can be molded from any suitable plastic or can be made from wood or metal, as will be understood. It may take any of a plurality of shapes as long as the fundamental cutting parts are retained, and, while I have illustrated it simply as a substantially square paper weight, it can readily be made in stream-lined or other fanciful shapes and may even simulate an animal, such as a turtle, if this be desired. It is particularly adapted to advertising display and may bear printed matter, trademarks or the like.

I claim:

1. An envelope opener or the like comprising a block having a groove extending the full length of one surface thereof, a substantially flat cutting blade removably carried by the block with a cutting edge extending into the groove in a position substantially parallel with the bottom of the groove and inclined to the side wall thereof at an angle of about 35°, a ribbon spring secured to the side wall of the groove opposite the blade and having a narrow slot into which the cutting edge of the blade extends, and adjustable means for controlling the distance that the cutting edge of the blade extends into the slot in the spring, said spring being tilted to form an angle greater than 90° with the bottom of the blade, and the groove in the block being formed deeper beyond the slot in the spring in the direction of movement of an envelope through the groove.

2. An envelope opener or the like comprising a block having a groove extending along one surface thereof, a cutting blade removably carried by the block with a cutting edge extending into the groove in a position substantially parallel with the bottom of the groove and inclined to the side wall thereof, a spring secured to the side wall of the groove opposite the blade and having a narrow slot into which the cutting edge of the blade extends, and means for controlling the distance that the cutting edge of the blade extends into the slot in the spring, said spring being tilted to form an angle greater than 90° with the bottom of the blade.

3. An envelope opener or the like comprising a block having a groove extending the full length of one surface thereof, a cutting blade removably carried by the block with a cutting edge extending into the groove in a position substantially parallel with the bottom of the groove and inclined to the side wall thereof, a ribbon spring secured to the side wall of the groove opposite the blade and having a narrow slot into which the cutting edge of the blade extends, and adjustable means for controlling the distance that the cutting edge of the blade extends into the slot in the spring.

4. An envelope opener or the like comprising a block having a groove extending along one surface thereof, a cutting blade removably carried by the block with a cutting edge extending into the groove in a position substantially parallel with the bottom of the groove and inclined to the side wall thereof, and a ribbon spring secured to the side wall of the groove opposite the blade and having a narrow slot into which the cutting edge of the blade extends.

5. An envelope opener or the like comprising a block having a groove extending the full length of one surface thereof, a cutting blade removably carried by the block with a cutting edge extending into the groove in a position substantially parallel with the bottom of the groove and inclined to the side wall thereof, and a ribbon spring secured to the side wall of the groove opposite the blade and having a narrow slot into which the cutting edge of the blade extends, said spring being tilted to form an angle greater than 90° with the bottom of the blade.

6. An envelope opener or the like comprising a supporting member having a groove extending along one surface thereof, a cutting blade carried by said member and having a cutting edge extending into the groove from one side thereof, and resilient means secured to the opposite side wall of the groove for supporting an envelope on both sides of the blade between said resilient means and the first-mentioned side of the groove.

7. An envelope opener or the like comprising a supporting member having a groove extending along one surface thereof, a cutting blade carried by said member and having a cutting edge extending into the groove from one side thereof, resilient means secured to the opposite side wall of the groove for receiving a portion of the blade and pressing an envelope against the first-mentioned side of the groove, and means for positively adjusting the distance that the blade extends through said resilient means.

8. An envelope opener or the like comprising a supporting member having a groove extending along one surface thereof, a cutting blade carried by said member and having a cutting edge extending into the groove from one side thereof, and resilient means secured to the opposite side wall of the groove for supporting an envelope on both sides of the blade between said resilient means and the first-mentioned side of the groove, said resilient means being inclined at an angle greater than 90° with the bottom of the blade whereby to hold the envelope down in the groove.

OCTAVIAN MAXIMILIAN.