Dec. 15, 1964 S. L. CHAPMAN 3,161,194

HYPODERMIC SYRINGE

Filed Feb. 4, 1963

FIG. 1

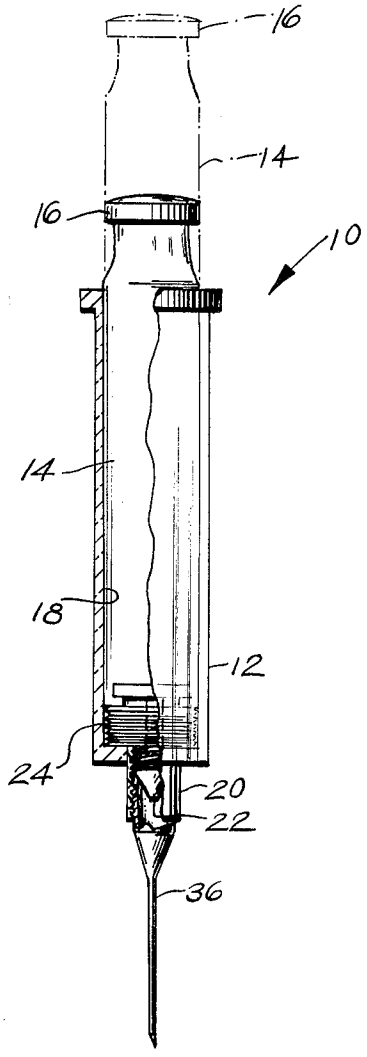

FIG. 2

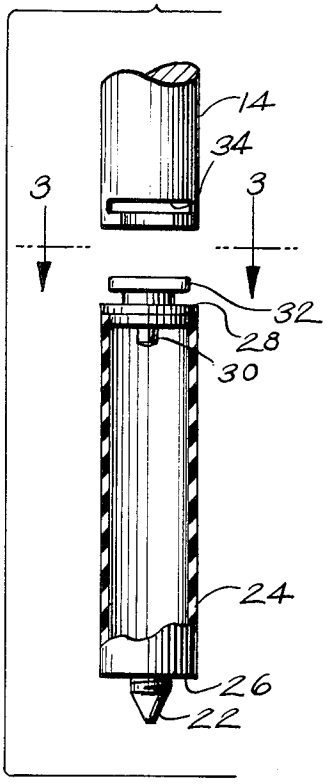

FIG. 3

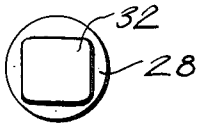

INVENTOR.

SAMUEL L. CHAPMAN

United States Patent Office 3,161,194
Patented Dec. 15, 1964

3,161,194

HYPODERMIC SYRINGE

Samuel L. Chapman, 2814 Conner St., Port Huron, Mich.

Filed Feb. 4, 1963, Ser. No. 255,772
6 Claims. (Cl. 128—218)

This invention relates to hypodermic syringes and the like.

It is an object of the present invention to provide a hypodermic syringe which will save time, labor, and finance, such as in the operations of washing, sterilization, assembling and disassembling of the syringe, and also will be non-clogging.

Another object of the present invention is to provide a hypodermic syringe which will allow medical personnel to be able to use one syringe over and over, as many times as deemed necessary, without the contamination of the syringe and its contents.

A further object of the present invention is to provide a hypodermic syringe which will have a disposable encasement chamber with a means of locking it to the bottom of a plunger and will compress in a manner of an accordion and locking it in that position in order that it may be threaded into the bottom of the barrel of the syringe.

Other objects of the invention are to provide a hypodermic syringe bearing the above objects in mind which is of simple construction, has a minimum number of parts, is inexpensive to manufacture and efficient in operation.

For other objects and for a better understanding of the invention reference may be had to the following detailed description taken in conjunction with the accompanying drawing, in which:

FIGURE 1 is a vertical view of a hypodermic syringe comprising the present invention;

FIGURE 2 is a side view shown exploded of the plunger locking device of the rubber encasement chamber shown in FIGURE 1; and

FIGURE 3 is a view taken on the lines 3—3 of FIGURE 2.

Referring to the drawing, a hypodermic syringe **10** made in accordance with the present invention is shown to include an elongated and hollow glass barrel **12** which freely and slidably receives elongated glass plunger **14** having a flanged head **16**. Plunger **14** is slidably received within the bore **18** of glass barrel **12** and barrel **12** has a neck **20** at its lower end which is internally threaded for receiving a conical tip **22** having external threads above it. Conical tip **22** projects from a disposable encasement chamber **24** which is made of rubber and folds in an accordian like manner and provides a means for containing fluids for injection purposes. Encasement chamber **24** is provided with a lower end wall **26** which opens into the conical tip **22** for the ejection of fluid contained within. The upper end of encasement chamber **24** is provided with an upper end wall **28** which is fixedly secured to encasement chamber **24** and a pin **30** projects centrally downward within encasement chamber **24** and provides a means for threading the conical tip end of encasement chamber **24** into the neck **20** of barrel **12**. End wall **28** is provided on its external side with a flanged head **32** which is freely and slidably received within elongated slot **34** of rectangular configuration through the lower end of plunger **14** thus providing locking means for encasement chamber to plunger **14**. The hollow injection needle **36** is threadingly received within the neck **20** of glass barrel **12**.

In operation, plunger **14** is removed from within bore **18** of glass barrel **12** and the flanged head **32** of the thin rubber encasement chamber **24** is inserted into the slots **34** of plunger **14** and thus plunger **14** retains encasement chamber **24**. The top and bottom of encasement chamber **24** is folded in an accordion like manner and locked thereby means of the pin **30** of end wall **28** and thus encasement chamber **24** is threadingly received by means of the external threads on the conical tip **22** into the neck **20** of barrel **12**.

The disposable encasement chamber **24** is then filled by the operator pulling upward on plunger **14** which creates a vacuum within glass barrel **12** thus by differential in pressure the fluid for injection fills up the encasement chamber which will thus enable syringe **10** to be used for injection purposes.

It will be noted that the disposable encasement chamber **24** may be easily removed from within barrel **12** and the flanged head **32** removed from the slot **34** of plunger **14** after unthreading the conical tip **22** from within the neck **20** and thus encasement chamber **24** may be discarded and a new one may be placed into position for further use.

It shall further be noted that end walls **26** and **28** are constructed of plastic material and the disposable encasement chamber **24** is constructed of thin wall rubber material thus providing easy compression thereof.

While various changes may be made in the detail construction it shall be understood that such changes shall be within the spirit and scope of the present invention as defined by the appended claims.

What I claim as new and desire to protect by Letters Patent of the United States is:

1. A hypodermic syringe comprising an elongated tubular barrel including a lower end having an opening extending therethrough, an internally threaded sleeve secured in said opening and extending from the lower end of the barrel, a radially outwardly extending annular flange at the upper end of said barrel, an encasement chamber positioned within said barrel comprising a thin rubber hollow cylinder collapsible in the manner of an accordion, a plastic inner end member adjacent the lower end of the barrel secured to one end of said rubber cylinder, an externally threaded conical projection on the outer side of the inner end member threadedly engaged with the interior of said sleeve and having a passage extending axially therethrough and an outer end member secured to the other end of the rubber cylinder, a central pin depending from the inner side of the outer end member which is bevelled at the free end thereof for encroaching upon the opening through the inner end wall of the encasement chamber to secure the outer end wall to the inner end wall so that torque can be transferred therebetween without producing torque in the rubber cylinder with the rubber cylinder in a collapsed position, an outer substantially rectangular flanged head on the outer side of the outer end wall of the encasement chamber, a hollow needle threadedly secured to the sleeve and a plunger extending into the upper end of the barrel having a transversely extending substantially rectangular recess therein receiving the flanged head on the outer end wall of the encasement chamber to facilitate expanding and collapsing of the encasement chamber on axial movement of the plunger within the barrel.

2. A hypodermic syringe comprising in combination a cylindrical barrel barrel having a closed end and an open end, a threaded opening through the closed end of the syringe barrel, an encasement chamber positioned in the barrel including a collapsible hollow cylinder and an inner end wall having an opening therethrough and an outer end wall secured to the opposite ends of the cylinder, means actuated by rotation of the chamber for securing the encasement chamber to the closed end of the barrel with the opening through the inner end wall and barrel end in alignment, a hollow needle and means for

securing the hollow needle to the closed end of the barrel over the opening therethrough, means operable between the inner and outer end walls of the encasement chamber for preventing torque transfer to the collapsible portion of the encasement chamber on rotation of the inner end wall of the encasement chamber with respect to the lower end wall thereof with the encasement chamber in a collapsed position, a plunger having an inner end fitting within the open end of the barrel and means for securing the outer end wall of the encasement chamber to the inner end of the plunger against relative axial and rotational movement therebetween.

3. Structure as set forth in claim 2 wherein the means for preventing relative rotation between the inner and outer end wall of the encasement chamber comprises a pin having a conical free end depending from the inner side of the upper end wall of the encasement chamber aligned with the opening through the inner end wall of the encasement chamber for encroachment thereon with the encasement chamber collapsed.

4. Structure as set forth in claim 2 wherein the collapsible cylinder part of the encasement chamber is thin rubber and the end walls thereof are of rigid plastic.

5. Structure as set forth in claim 2 wherein the means for securing the outer end wall of the encasement chamber to the inner end of the plunger comprises a substantially

rectangular flanged head on the outer side of the outer end wall of the encasement chamber and a corresponding transversely extending substantially rectangular recess within the end of the plunger receiving the flanged head of the encasement chamber.

6. A disposable encasement chamber for use in a hypodermic syringe or the like comprising a collapsible, hollow cylinder, a separate end wall secured to each of the opposite ends of the hollow cylinder one of which has an opening extending therethrough, a threaded projection on the one end wall through which the opening extends and means operable between the separate end walls for transferring torque therebetween with the encasement in a collapsed position without producing torque in the hollow cylinder.

References Cited in the file of this patent

UNITED STATES PATENTS

798,093	Dean	Aug. 29, 1905
2,690,179	Fox	Sept. 28, 1954
2,727,516	Lockhart	Dec. 20, 1955
2,950,717	Bouet	Aug. 30, 1960

FOREIGN PATENTS

32,825	Denmark	Jan. 28, 1924
1,103,541	France	May 25, 1955