Our Ref: 507612

P/00/001
Section 29

AUSTRALIA

Patents Act 1990

PATENT REQUEST : STANDARD PATENT

I/We, being the person/s identified below as the Applicant, request the grant of a patent to the person/s indicated below as the Nominated Person/s, for an invention described in the accompanying standard complete specification.

Full application details follow.

[71] [70] Applicant/s and Nominated Person/s:
Quartet Manufacturing Company,
of 5700 Old Orchard Road, SKOKIE, Illinois, 60077, UNITED STATES OF AMERICA

[54] Invention Title:
Portable easel

[72] Name/s of actual inventor/s: (optional)

[74] Address for service in Australia:
DAVIES COLLISON CAVE, Patent Attorneys
10 Barrack Street, SYDNEY NSW 2000 Attorney Code : CA

BASIC CONVENTION APPLICATION/S DETAILS:

[31] Appln No.:	[33] Country:	Code:	[32] Date:
08/074,773	UNITED STATES OF AMERICA	US	9 June 1993

Drawing number recommended to accompany the abstract:

DATED this TWENTY SEVENTH day of MAY 1994

Quartet Manufacturing Company
By Patent Attorneys
DAVIES COLLISON CAVE

Peter Stearne

Dr. PETER STEARNE, FIPAA

Fee: $ 307.00

S 046495 270594

5010

AUSTRALIA

Patents Act 1990

681126

NOTICE OF ENTITLEMENT

QUARTET MANUFACTURING COMPANY being the Nominated Person in respect of Application No. 63400/94 state the following :

The Nominated Person is entitled to the grant of the patent because the Nominated Person derives title to the invention from the inventors, MICHAEL RELLINGER, RICHARD R. GILBERT, SARA E. GREEN and JOHN JEPSEN, by assignment.

The Nominated Person is entitled to claim priority from the basic application listed on the patent request form because the Nominated Person is the assignee of the basic application listed on the patent request form, and because the basic application is the first application made in a Convention country in respect of the invention.

Dated this 13th day of December, 1996.

a member of the firm of
DAVIES COLLISON CAVE
for and on behalf of
the applicant(s).

AU9463400

(12) PATENT ABRIDGMENT (11) Document No. AU-B-63400/94
(19) AUSTRALIAN PATENT OFFICE (10) Acceptance No. 681126

(54) Title
PORTABLE EASEL

International Patent Classification(s)
(51)[5] **A47B 097/04** **A47B 097/08**

(21) Application No. : **63400/94** (22) Application Date : **27.05.94**

(30) Priority Data

(31) Number	(32) Date	(33) Country
074773	**09.06.93**	**US UNITED STATES OF AMERICA**

(43) Publication Date : **15.12.94**

(44) Publication Date of Accepted Application : **21.08.97**

(71) Applicant(s)
QUARTET MANUFACTURING COMPANY

(72) Inventor(s)
MICHAEL RELLINGER; RICHARD R. GILBERT; SARA E. GREEN; JOHN JEPSEN

(74) Attorney or Agent
DAVIES COLLISON CAVE , GPO Box 3876, SYDNEY NSW 2001

(56) Prior Art Documents
US 2912203
GB 2234428
US 3095666

(57) Claim

1. A portable easel comprising

a base pedestal portion having leg means pivotally mounted on and foldable toward and away from said base pedestal portion for securing said base pedestal portion upright on a surface;

a display portion telescopically engaged with said base pedestal portion and having means for removably securing thereon display materials:

said portions being movable relative to one another into extended and collapsed positions:

said portions having cooperating interlocking means for securing said portions in one of a plurality of selected positions when said leg means are pivoted and folded away from said base pedestal portion;

wherein said interlocking means has an aperture through said pedestal base portion and notches aligned with said aperture in said display portion, and articulating means for moving a part of said leg means through said aperture and into a corresponding notch to secure said portions in the selected position.

.../2

13. A portable easel comprising

a base pedestal portion having a face defining track means for receiving a display portion telescoped therein;

a display portion having a flat surface for receiving indicia thereon and a surface remote from said flat surface interlocked with and telescopically movable on said base pedestal track means;

said portions being telescopically movable relative to one another into extended and collapsed positions;

cooperating interlocking means for securing said portions in one of a plurality of selected positions:

ramp and bar means restricting movement of said display portion relative to said base pedestal portion during movement of said portions in one direction but which do not interfere with movement in an opposite direction; and

leg means for holding said easel upright in selected extended or collapsed position, wherein said leg means are associated with said interlocking means and removably secure said portions together when in selected position.

14. A portable easel comprising

a base pedestal portion having leg means pivotally mounted on and foldable toward and away from said base pedestal portion for securing said base pedestal portion, generally upright on a surface;

a display portion telescopically engaged with said base pedestal portion and having means for removably securing thereon display materials;

said portions being movable relative to one another into extended and collapsed positions;

cooperating interlocking means for securing said portions in one of a plurality of selected positions including means associated with said leg means when extended for holding said portions position in said one of the plurality of selected positions;

said base portion having a groove for receiving said leg means nested within the peripheral plane of said portion when said leg means are folded against said base portion.

Our Ref: 507612

P/00/011
Regulation 3:2

AUSTRALIA

Patents Act 1990

ORIGINAL
COMPLETE SPECIFICATION
STANDARD PATENT

Applicant(s): Quartet Manufacturing Company
5700 Old Orchard Road
SKOKIE Illinois 60077
UNITED STATES OF AMERICA

Address for Service: DAVIES COLLISON CAVE
Patent & Trade Mark Attorneys
Level 10, 10 Barrack Street
SYDNEY NSW 2000

Invention Title: Portable easel

The following statement is a full description of this invention, including the best method of performing it known to me:-

PORTABLE EASEL

Background and Summary of the Invention

This invention relates to a portable easel and is more particularly directed to such an easel which may be easily handled, and collapsed for convenient storage and transportation, but which is also sturdy and able to stand up to heavy use and is very durable.

Preferably, an easel embodying the present invention may be blow molded from plastic materials, such as polyethylene plastic, which resists scratches and dents. The easel embodying the present invention comprises a pedestal base portion over which a display portion is slideably telescoped and which may be arranged in selected positions. Each portion is blow-molded into a unitary piece having integral front and rear walls and reinforcing ribs and spacers molding the walls in spaced relation to one another.

This novel easel has built-in leg means for holding the unit upright which may be used to set up the easel into a secured lockable selected position. The device has built into it means for use and storage of writing and display materials, such as markers, tape and the like, and also means for holding standard paper tablets, easel pads, flipcharts and the similar displays, which may be used without fuss.

Construction of the subject easel provides a light weight and

strong unit, which is easy to handle and has long life, and folds up into a self-contained unit that is lightweight, balanced and portable. The easel stacks and stores easily, and like devices have interlocking members which provide for easy storage, transport and use. This novel easel may be used on a floor or table, and is fully adjustable for that purpose.

According to one aspect of the present invention there is provided a portable easel comprising a base pedestal portion having leg means pivotally mounted on and foldable toward and away from said base pedestal portion for securing said base pedestal portion upright on a surface; a display portion telescopically engaged with said base pedestal portion and having means for removably securing thereon display materials: said portions being movable relative to one another into extended and collapsed positions: said portions having cooperating interlocking means for securing said portions in one of a plurality of selected positions when said leg means are pivoted and folded away from said base pedestal portion; wherein said interlocking means has an aperture through said pedestal base portion and notches aligned with said aperture in said display portion, and articulating means for moving a part of said leg means through said apertures and into a corresponding notch to secure said portions in selected position.

According to another aspect of the present invention there is provided a portable easel comprising a base pedestal portion having a face defining track means for receiving a display portion telescoped therein; a display portion having a flat surface for receiving indicia thereon and a surface remote from said flat surface interlocked with and telescopically movable on said base pedestal track means; said portions being telescopically movable relative to one another into extended and collapsed positions; cooperating interlocking means for securing said portions in one of a plurality of selected positions: ramp and bar means restricting movement of said display portion relative to said base pedestal portion during movement of said portions in one direction but which do not interfere with movement in an opposite direction; and leg means for holding said easel upright in selected extended or collapsed position, wherein said leg means are associated with said interlocking means and removably secure said portions together when in selected position.

AUSTRALIAN PATENT OFFICE

According to yet another aspect of the present invention there is provided a portable easel comprising a base pedestal portion having leg means pivotally mounted on and foldable toward and away from said base pedestal portion for securing said base pedestal portion, on upright on a surface; a display portion telescopically engaged with said base pedestal portion and having means for removably securing thereon display materials; said portions being movable relative to one another into extended and collapsed positions; cooperating interlocking means for securing said portions in one of a plurality of selected positions; said base portion having a groove for receiving said leg means nested within the peripheral plane of said portion when said leg means are folded against said base portion; said leg means when extended having means for holding said portions positioned in said one of the plurality of selected positions.

According to yet another aspect of the present invention there is provided a portable easel comprising a base pedestal portion having leg means pivotally mounted on and foldable toward and away from said base pedestal portion for securing said base pedestal portion upright on a surface; a display portion telescopically engaged with said base pedestal portion and having means for removably securing thereon display materials; said portions being movable relative to one another into extended and collapsed positions; said portions having cooperating interlocking means for securing said portions in one of a plurality of selected positions when said leg means are pivoted and folded away from said base pedestal portion; at least one of said portions comprising a hollow body having spaced apart walls, said walls having cooperating recesses and protrusions arranged to provide rigidity across said body.

According to yet another aspect of the present invention there is provided a portable easel comprising a base pedestal portion having leg means mounted thereon movable for securing said base pedestal portion upright on a surface; a display portion engaged with said base pedestal portion and having means for removably securing thereon display materials; said portions being movable relative to one another into extended and collapsed positions; said portions having cooperating interlocking means for securing said portions in one of a plurality of selected positions; said portions each comprising a hollow body having spaced apart walls

AUSTRALIAN PATENT OFFICE

closed at their edges, said walls having cooperating recesses and protrusions arranged to provide rigidity across said body.

Preferred embodiments of the invention will be hereinbefore described with reference to the accompanying drawings.

Figure 1 is a perspective view of an easel embodying the present invention, showing the easel in extended position ready for use.

Figure 2 is a perspective view of the easel shown in Figure 1, except it has been collapsed for use on a table or for storage or transportation (when the legs are folded against the pedestal base portion).

Figure 3 is an enlarged front elevational view of the easel embodying the invention shown in Figure 1.

Figure 4 is a rear elevation view of the easel shown in Figure 3, with parts of the upper easel section being broken away.

Figure 5 is a side elevational view of the easel shown in Figure 3, with the legs extended.

Figure 6 is a sectional view of the pedestal base portion of the easel taken on line 6-6 of Figure 4.

Figure 7 is another sectional view of the pedestal base

AUSTRALIAN PATENT OFFICE

portion of the easel taken on line 7 - 7 of Figure 4.

Figure 8a is a sectional view of the easel taken on line 8a - 8a of Figure 4.

Figure 8b is a sectional view of the easel taken on line 8b - 8b of Figure 4, said line being a continuation of line 8a -8a (without the pad clamp).

Figure 9 is a top plan view of the easel shown in Figure 4 (without the pad clamp).

Figure 10 is a sectional view of the easel taken on line 10 - 10 of Figure 4.

Figure 11 is a view of the easel taken on line 11 - 11 of Figure 4, taken partially in section.

Figure 12 is a detail sectional view of the leg locking structure for the easel when collapsed for table top use as shown in Figure 2.

Figure 13 is a detail sectional view of the leg locking structure similar to Figure 12, except showing the easel in extended position of Figure 5, taken on line 13 - 13 thereof.

Figure 14 is a fractional detail sectional view of the upper part of the display portion of the easel, showing the pad clamp and associated spring clip structure.

Figure 15 is a detail schematic view of the toggle and leg movement relative to the pedestal base portion of the easel.

Description of the Preferred Embodiment

With reference to Figures 1 - 5 of the accompanying drawings, the easel 10 has a pedestal base portion 11 and a display portion 12, upon which a pad of paper P may be affixed or indicia placed thereon for display to a group of people in a conference or meeting situation.

Preferably, the pedestal base portion 11 has spaced apart feet 13 and upright members 14, which may be bridged by the upper portion thereof defining compartments 15 for holding markers, tape and the like. Telescoped into the pedestal base portion 11, is the display portion 12, and this pedestal base portion has unitary front and rear walls, 16 and 17, respectively (see Figs. 6 and 7). Legs 18 are arranged and foldable into corresponding grooves 19 on the rear wall 17 of the pedestal base portion 11.

A flat display board 20 is on one face of the display portion 12, and is intended to back up a writing pad P or other display. A spring clamp assembly 21 is secured to an upper edge of the display board 20 so that a pad P may be clipped by the spring clamp assembly to the display board 20 for securing the pad P thereon in a way for pages of the pad to be flipped over the top 22 of the board. Lifting handles 23 may be molded into side edges 24 of the display portion 12 for easy and balanced lifting and collapsing of the display portion relative to the pedestal base portion 11.

The legs 18 are preferably tubular and U-shaped and have a

bottom member 25 bridging upright side members 26 which are pivotally secured to the rear wall 17 of the pedestal base portion 11 by means of upper toggle bracket assemblies 27 through short toggle links 27a, preferably screw mounted to the rear wall and leg. The side leg members 26 also are secured to the rear wall 17 by lower toggle bracket assemblies 28, preferably also screw mounted to the rear wall and leg, through long toggle links 29, which define arcs for moving the legs 18 toward and away from the pedestal base portion 11 during set up and storage of the easel 10, as shown schematically in Figure 15, which depict the movement of the legs from position 1 to position 2, and vice versa, in the direction of the respective arrows, as the leg ends 51 are articulated into and out of the apertures 52, in a manner and for a purpose hereafter discussed. Preferably, the leg side members 26 have an integral cross member 30 at the connection of the toggle links 29 to provide rigidity of the structure when set up.

The rear wall 17 of the pedestal base has several recess and protrusions. Recesses 31 provide handles for carry the easel 10 selectively from either side of the easel when collapsed. Recess 32 provides a handle for carry the easel by the leg cross member 30 in an upright position when collapsed. Recess 33 provides rigidity to the pedestal base portion 11 and includes kiss-offs or stress absorbing wells 33a for absorbing strain during collapse and extension of the display portion relative to the base portion.

Bottom Recess 34 may be used for grasping the legs 18 and pulling them out of the leg recesses during set up. Leg cross member protrusions 35 act as guides for properly seating the leg cross member 30 when the legs are closed against the pedestal base portion in the leg recesses 19. A rounded protrusion 36 having an inverted V shaped cross section is arranged across the lower side of the rear wall and reinforces the wall 17.

With reference to the display portion 12, its rear wall 37 is unitary with the front wall forming the display board 20, the rear wall has a plurality of ribs 38 and stress absorbing wells 39, which stiffen and space apart the front display board 20 and rear wall 37 and absorb stress during extension and collapse of the base and display portions 11 and 12, respectively. On each side of and between the ribs 38, are a plurality of ramps 40 which when the easel is assembled preferably have a steeper taper in the direction of the feet 13 and a relatively more shallow taper in the direction of the top of the display board, and below each of these ramps 40 is a stress absorbing well 41.

A ledge 43 may be provided on the bottom edge of the display board 20 which can act as a lip for balancing a marker when the easel 10 is in use, and this ledge 43 also interlocks with rounded protrusion 36 on the rear wall 17 of the pedestal base portion 11 when collapsed; and the upper face of the board top 22 has a recess 42 which corresponds to a protrusion 43a on the rear wall 17 of the

pedestal base portion 11. Thus, like easels can be stacked interlocked and be retained in a stack while being transported.

The spring clamp assembly 21 is preferably screw mounted to the front wall of the display board 20 and may have posts 44 having free ends over which drilled holes H in the pad are installed, and this assembly preferably comprises an inverted L shaped clamp plate 45 arranged over the face of the board 20 for holding the upper edge of the pad P and a backer strip 46 which has a spring 47 urging the plate 45 over the pad toward the strip 46.

As shown in Figure 9 - 11, the rear wall 37 of the display portion 12 is formed with spaced apart vertically arranged tracks 48 and ridges 49, and the pedestal base portion 11 has inside edge member 50 formed corresponding to and interlocking with the tracks 48 and ridges 49 for sliding the display portion 12 upwardly or downwardly along the inside edge members 50 relative to the display portion 12 for elevating or lower the display portion.

With reference to Figures 12 and 13, means is provided for securing the display portion 12 relative to the pedestal base portion 11, either in extended floor mounted position as shown in Figure 1 or in telescoped table mounted position shown in Figure 2, respectively. In either position, the legs 18 are articulated, by the toggle links 27a and 29 held by upper and lower brackets 27 and 28, respectively, when folded away from the pedestal base portion 11 (see Figure 15), in position as shown in Figures 12 or

13, so that the ends 51 of the leg side members 26 obliquely extend through an aperture 52 through the pedestal base portion 11 and come to rest against an angularly tapered wall 53 of the aperture clearing upper wall 54.

The rear wall 37 of the display portion 11 has formed in it two sets of wedge shaped notches, one set arranged near the top 55 and the other set arranged near the bottom 56 of the display portion rear wall 37, each vertically and horizontally aligned, for receiving the leg ends 51, thus locking the display portion relative to the base portion selectively in the table top position shown in Figure 12 (using the top set 55 of notches) or the floor position shown in Figure 13 (using the bottom set 56 of notches).

In addition to the ramps 40 previously described for slowing down the movement of the display portion 12 as it slides downwardly on the pedestal base portion 11, bars 57 may be formed on the front wall 16 of the base portion, above the apertures 52, and corresponding bumps 58 may be formed in the rear wall 37 of the display portion to restrict the movement of the display portion 12 downwardly on the base portion 11 and to help hold the portions in position once adjusted, as shown in Figures 12 and 13.

Also, when the display portion 12 is telescoped downwardly over the base pedestal portion 11 in the manner described, the compartments 15 are closed and covered by the display portion. Thus, materials stored in these compartments may be safely stored,

transported and reused when the easel are needed again.

Normally, easels 10 are stored in the position shown in Figure 2, except the legs 18 are folded against the leg recess 19, laid horizontally stacked one easel upon the next easel, so that they interlock, as described, for stability. The upper easel is removed from the pile, and its display portion 12 may be extended, as shown in Figure 1, if used on a floor, or telescoped, if used on a table, as shown in Figure 2, with the legs folded away from the pedestal base 11 and in interlocked position with the display portion 12, as shown in Figures 12 and 13, respectively. A change from floor mount to table mount, or vice versa, may be easily accomplished, by slightly folding the leg ends 51 to clear the notches 55 or 56, moving the board 20 upwardly or downwardly, and re-locking the leg ends into the corresponding notches.

While a preferred embodiment of the novel easel has been shown, many variations and changes may be made in the structure, without departing from the spirit or scope of the invention. Accordingly it is not desire that the invention should be limited to the exact construction described.

THE CLAIMS DEFINING THE INVENTION ARE AS FOLLOWS:

1. A portable easel comprising

a base pedestal portion having leg means pivotally mounted on and foldable toward and away from said base pedestal portion for securing said base pedestal portion upright on a surface;

a display portion telescopically engaged with said base pedestal portion and having means for removably securing thereon display materials:

said portions being movable relative to one another into extended and collapsed positions:

said portions having cooperating interlocking means for securing said portions in one of a plurality of selected positions when said leg means are pivoted and folded away from said base pedestal portion;

wherein said interlocking means has an aperture through said pedestal base portion and notches aligned with said aperture in said display portion, and articulating means for moving a part of said leg means through said aperture and into a corresponding notch to secure said portions in the selected position.

2. The easel recited in claim 1, wherein said portions have members adopted to interlock like easels, one stacked upon another easel for transportation and storage.

3. The easel recited in claim 2, wherein said interlocking members comprise a plurality of protrusions and recesses on the faces of said portions.

4. The easel recited in claim 1, wherein said base pedestal portion has integral handle means recessed therein said portion which may be grasped when said easel is in collapsed condition.

5. The easel recited in claim 1, wherein said display portion has handle means which may be grasped when said easel is in collapsed condition.

AUSTRALIAN PATENT OFFICE

6. The easel recited in claim 1, wherein said display portion has a flat board surface on a side opposed to the leg means on said base pedestal portion.

7. The easel recited in claim 6, wherein the edges of said display portion intermediate said board surface have opposed gripping handles for telescoping said portions into extended and collapsed condition.

8. The easel recited in claim 6, wherein one edge of said board surface has a clamp assembly mounted therethrough for securing display materials to said surface.

9. The easel recited in claim 8, wherein said clamp assembly has a post element for securing a drilled pad to said surface.

10. The easel recited in claim 8, wherein said clamp assembly comprises a clip member arranged over a backer strip sandwiched over said board surface for holding said display material in position.

11. The easel recited in claim 10, wherein said clamp assembly has a spring member interspaced between said clip member and backer strip for urging said clip member against said board surface.

12. The easel recited in claim 1, wherein said pedestal base portion has integral compartments which are open when said portions are extended and closed by said display portion when said portions are in collapsed position.

13. A portable easel comprising

a base pedestal portion having a face defining track means for receiving a display portion telescoped therein;

a display portion having a flat surface for receiving indicia thereon and a surface remote from said flat surface interlocked with and telescopically movable on said base

AUSTRALIAN PATENT OFFICE

pedestal track means;

said portions being telescopically movable relative to one another into extended and collapsed positions;

cooperating interlocking means for securing said portions in one of a plurality of selected positions:

ramp and bar means restricting movement of said display portion relative to said base pedestal portion during movement of said portions in one direction but which do not interfere with movement in an opposite direction; and

leg means for holding said easel upright in selected extended or collapsed position, wherein said leg means are associated with said interlocking means and removably secure said portions together when in selected position.

14. A portable easel comprising

a base pedestal portion having leg means pivotally mounted on and foldable toward and away from said base pedestal portion for securing said base pedestal portion, generally upright on a surface;

a display portion telescopically engaged with said base pedestal portion and having means for removably securing thereon display materials;

said portions being movable relative to one another into extended and collapsed positions;

cooperating interlocking means for securing said portions in one of a plurality of selected positions including means associated with said leg means when extended for holding said portions position in said one of the plurality of selected positions;

said base portion having a groove for receiving said leg means nested within the peripheral plane of said portion when said leg means are folded against said base portion.

15. The easel recited in claim 14, wherein said pivotal mounting comprises toggle bracket assemblies joining said leg member to said base pedestal portion.

16. The easel recited in claim 14, wherein said toggle bracket assemblies define

AUSTRALIAN PATENT OFFICE 31

articulating arcs for the movement of said interlocking means.

17. The easel recited in claim 14, wherein said leg means comprise a U-shaped leg member pivotally secured and nested in said groove.

18. A portable easel substantially as hereinbefore described with reference to the accompanying drawings.

Dated this 28th day of May, 1997

QUARTET MANUFACTURING COMPANY

By Their Patent Attorneys

DAVIES COLLISON CAVE

AUSTRALIAN PATENT OFFICE

ABSTRACT OF THE DISCLOSURE

PORTABLE EASEL

A portable flipchart plastic blow molded easel having a display portion telescopically arranged on a pedestal base portion having legs pivotally secured to and foldable away from the base portion for holding the easel upright, the legs and portions having cooperating interconnected means for securing the easel in selected extended or collapsed condition, for table top or floor use and having nesting structure for holding like collapsed easels stacked together during transport and storage.

63400/94

1/6

FIG. 1

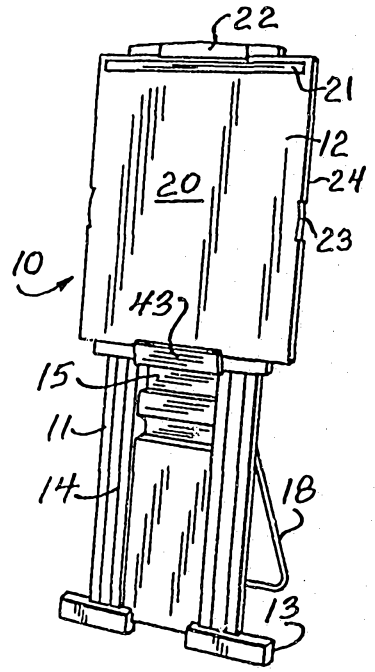

FIG. 2

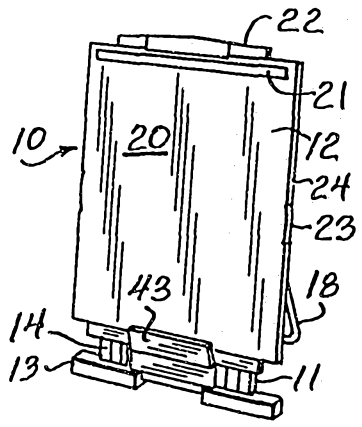

FIG. 3

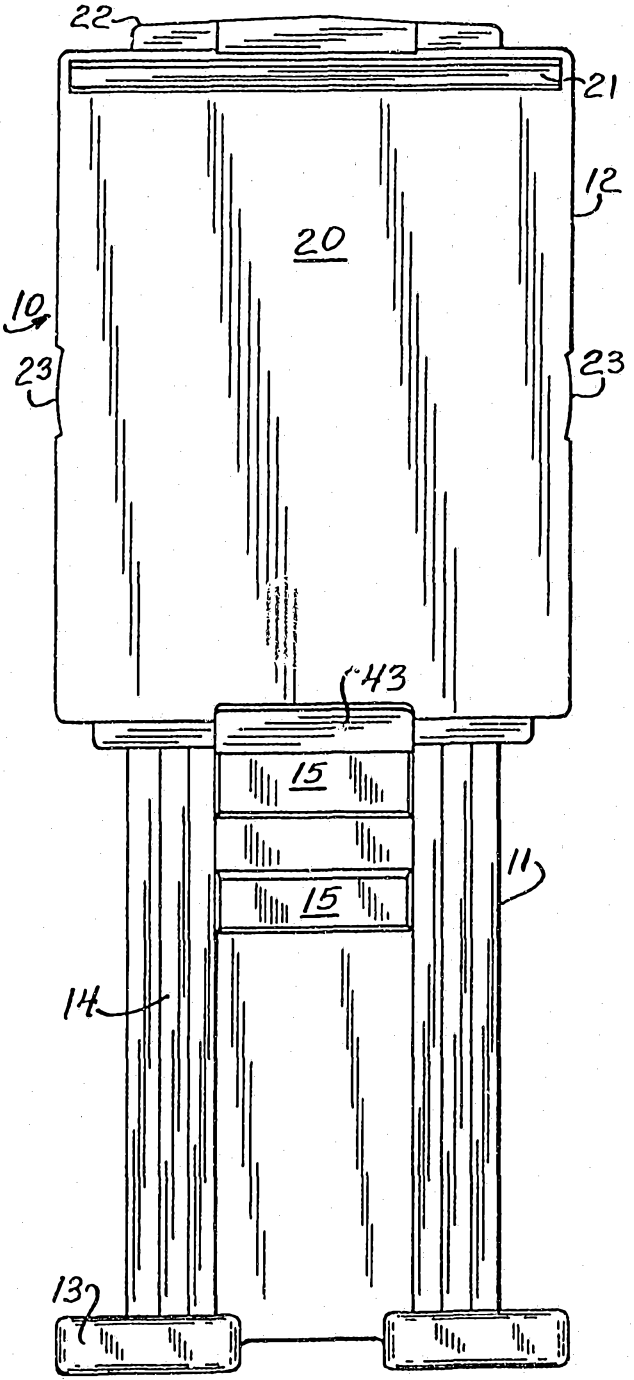

FIG. 4

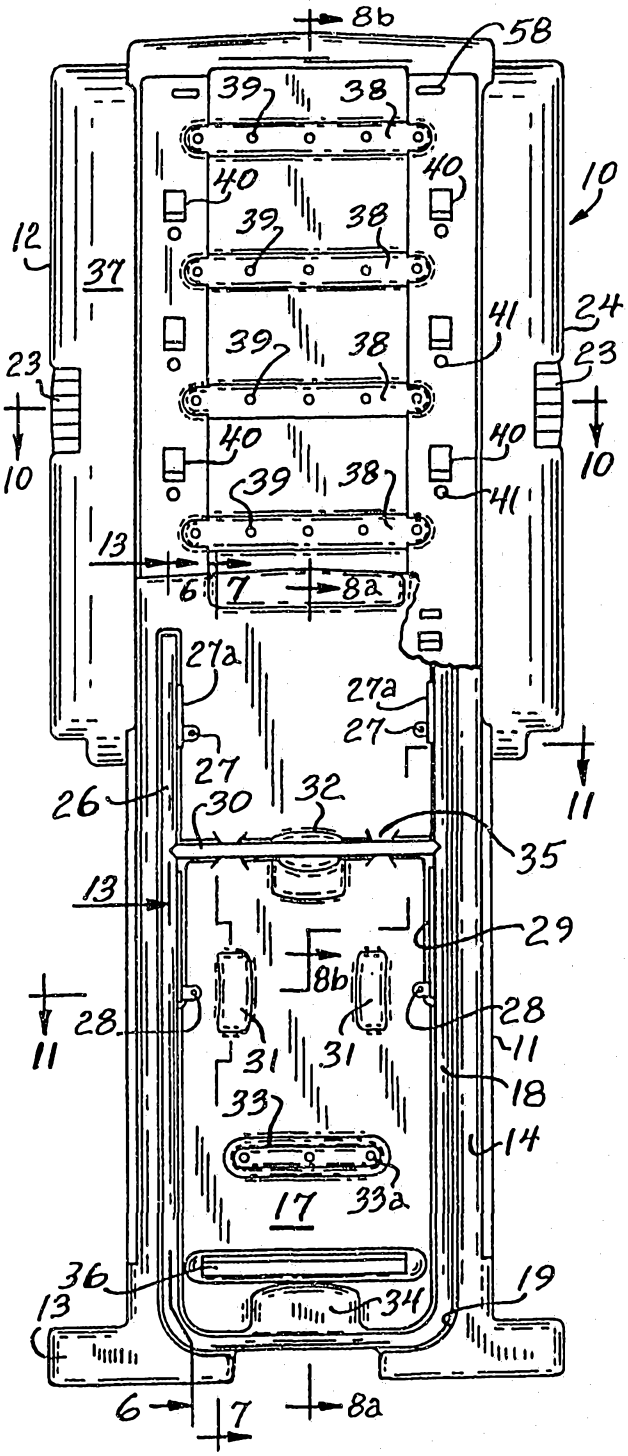
8b
58
39
38
40
10
12
37
41
24
23
10
13
6
7
8a
27a
27
26
30
32
35
11
29
28
31
18
33
14
17
33a
36
34
19

FIG. 5

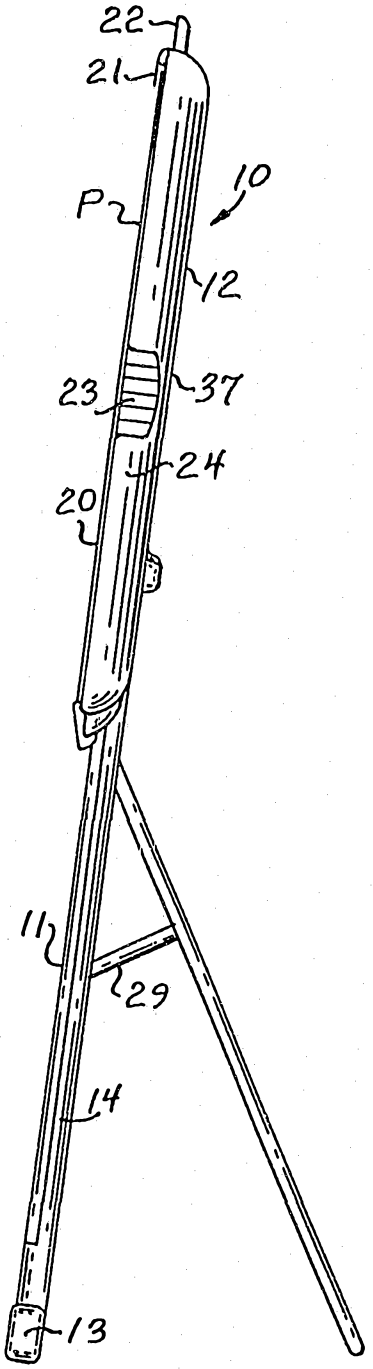
22
21
P
10
12
23
37
24
20
11
29
14
13

FIG. 6

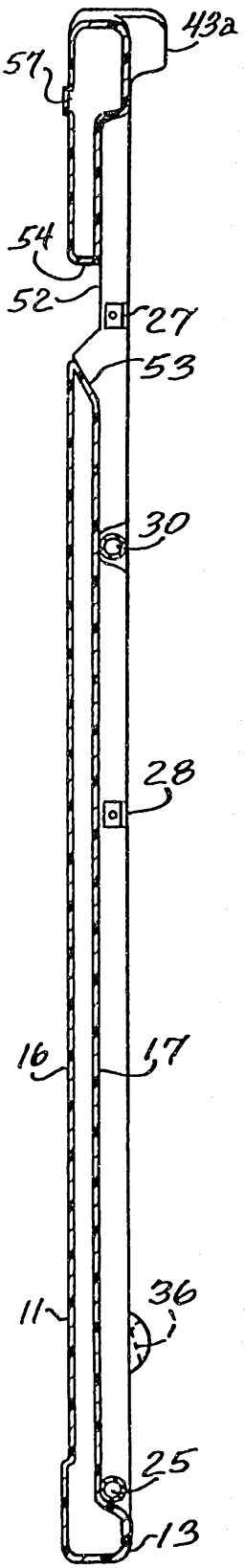

FIG. 7

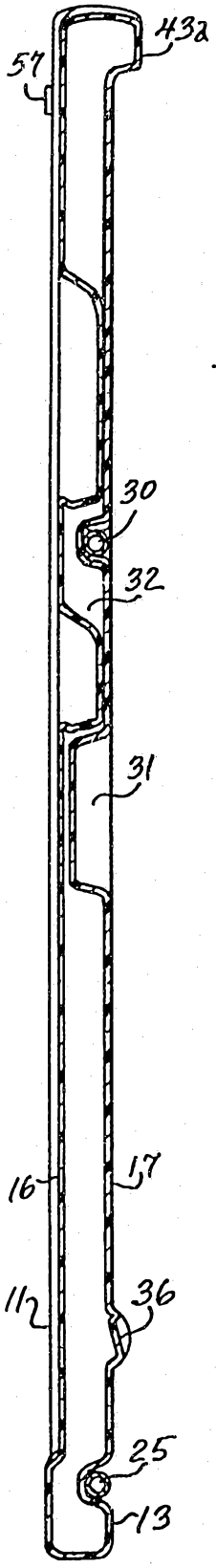

3/6

FIG. 8a

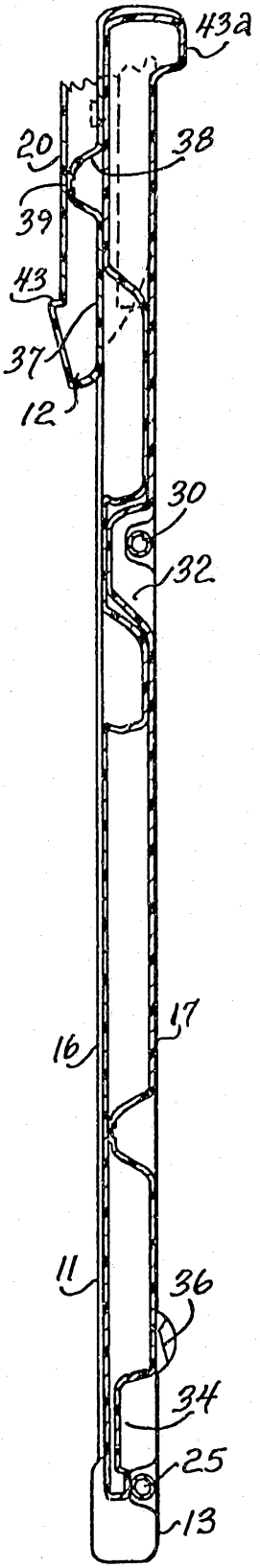

FIG. 8b

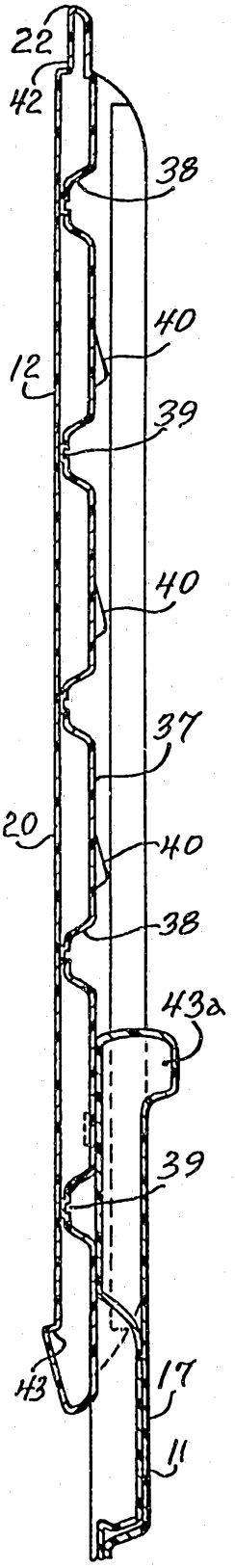

FIG. 9

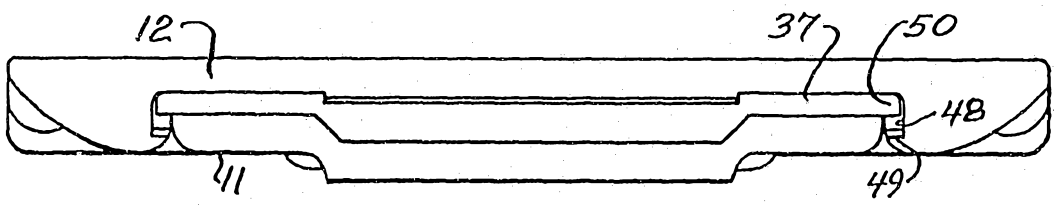

FIG. 10

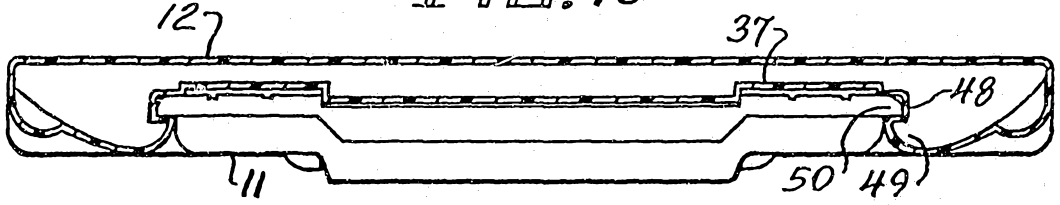

FIG. 11

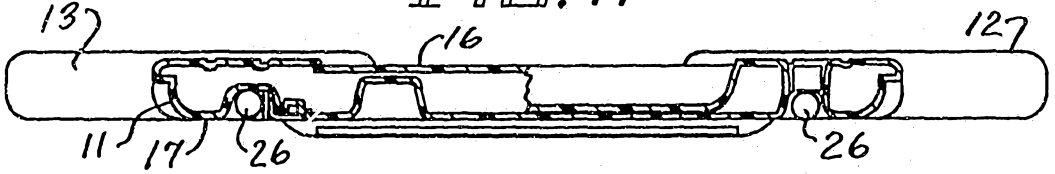

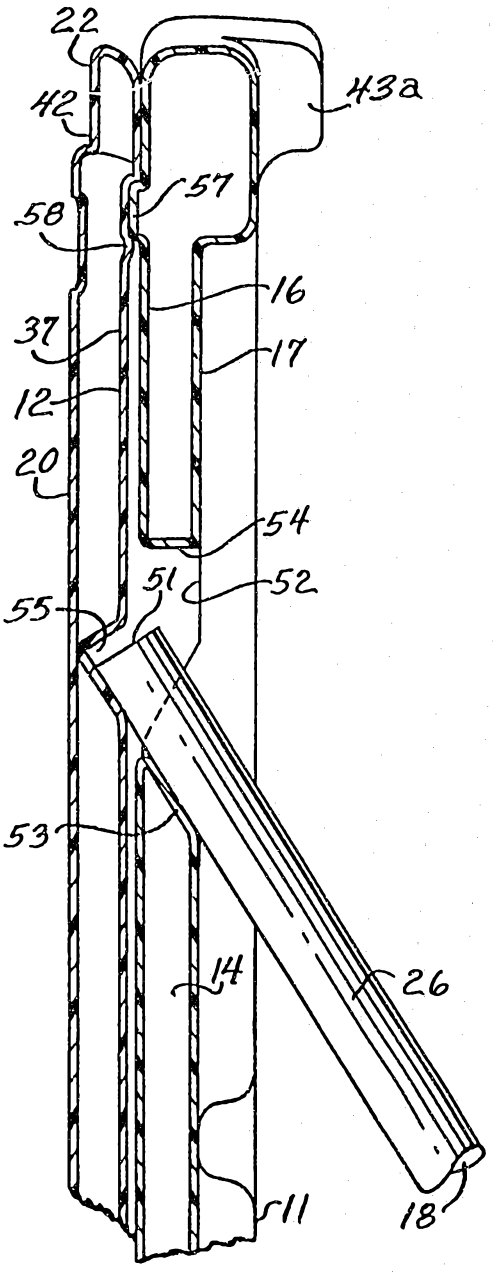
22
42
43a
57
58
16
37
17
12
20
54
51
52
55
53
14
26
11
18

FIG. 12

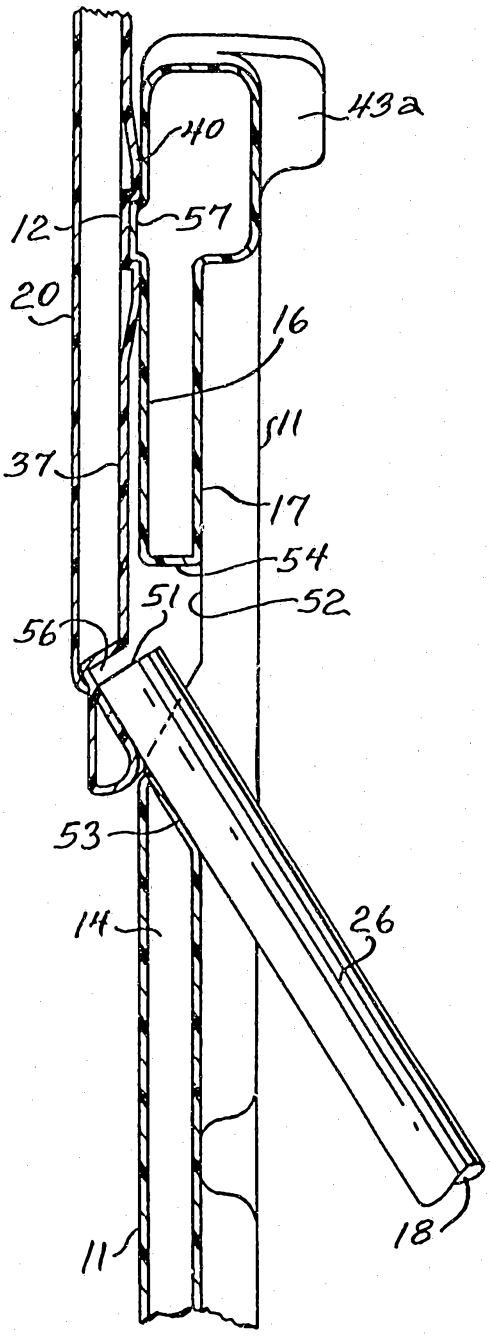
40
43a
12
57
20
16
11
37
17
54
51
52
56
53
14
26
11
18

FIG. 13

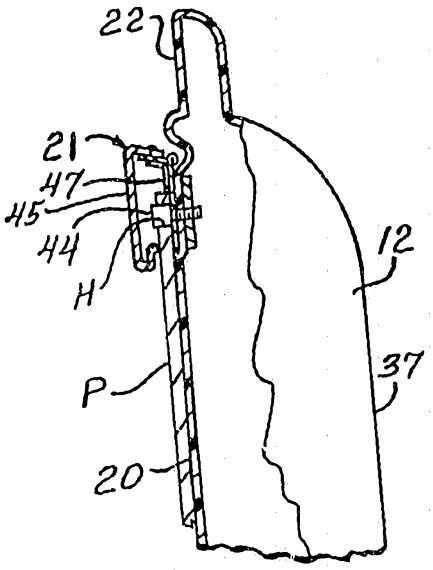

FIG.14

FIG.15

