July 15, 1969 C. H. BRINKHOFF 3,454,964

ADJUSTABLE EAR PROTECTOR

Filed May 3, 1967 3 Sheets-Sheet 1

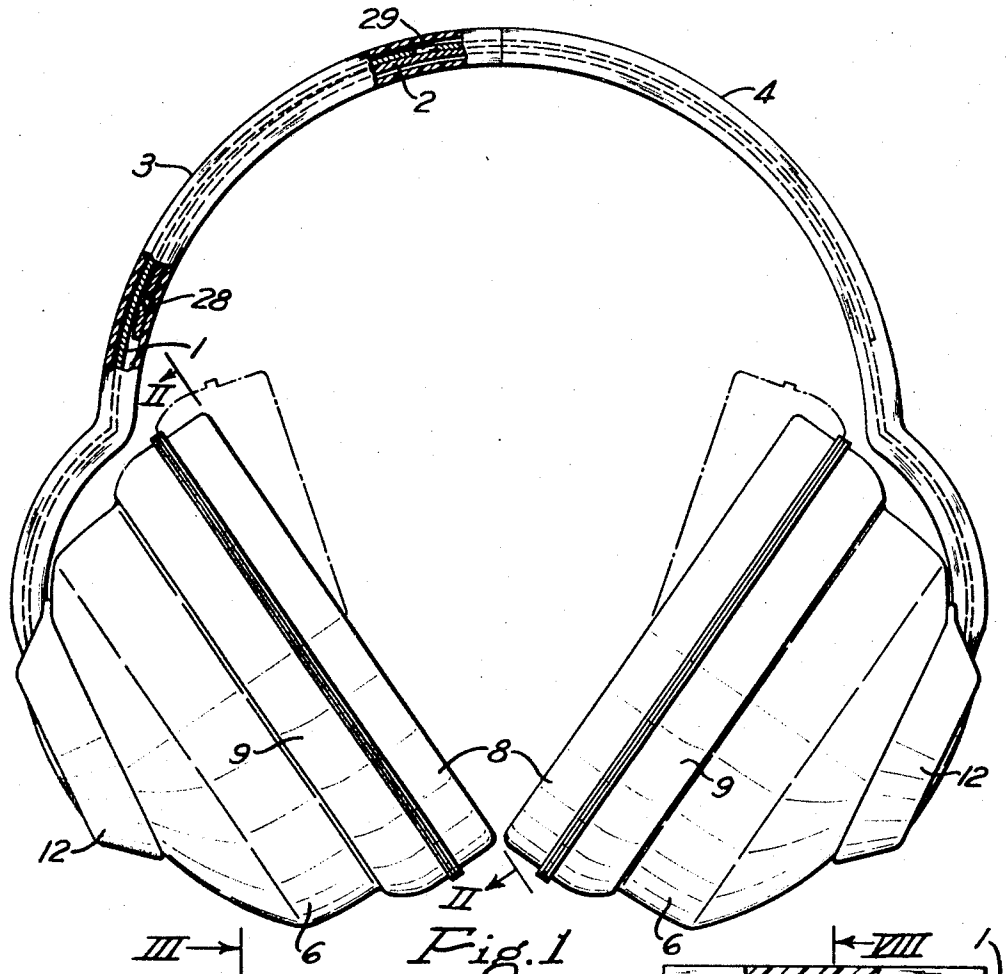

Fig. 1

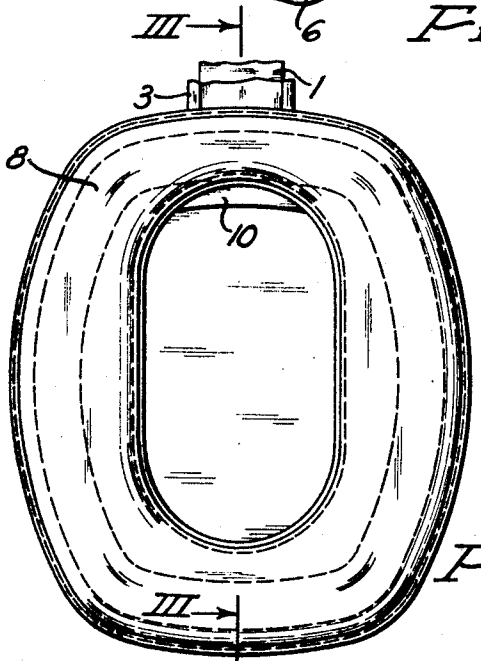

Fig. 2

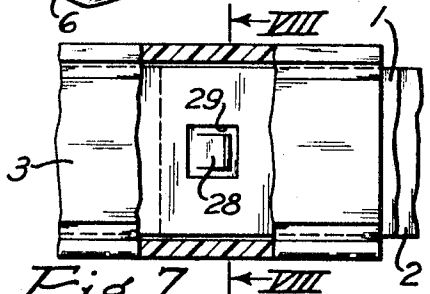

Fig. 7

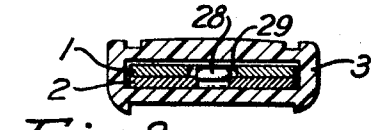

Fig. 8

INVENTOR.
CARL H. BRINKHOFF
BY
Brown, Critchlow, Flick & Peckham
ATTORNEYS.

July 15, 1969 C. H. BRINKHOFF 3,454,964

ADJUSTABLE EAR PROTECTOR

Filed May 3, 1967 3 Sheets-Sheet 2

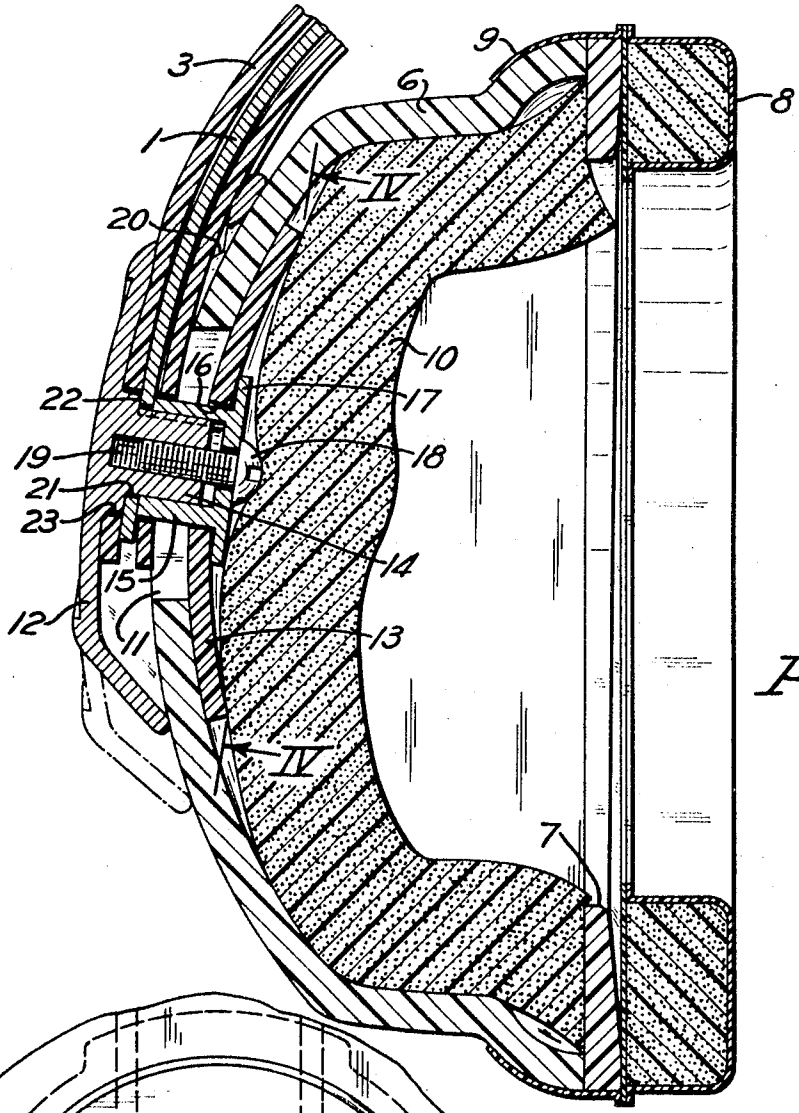

Fig. 3

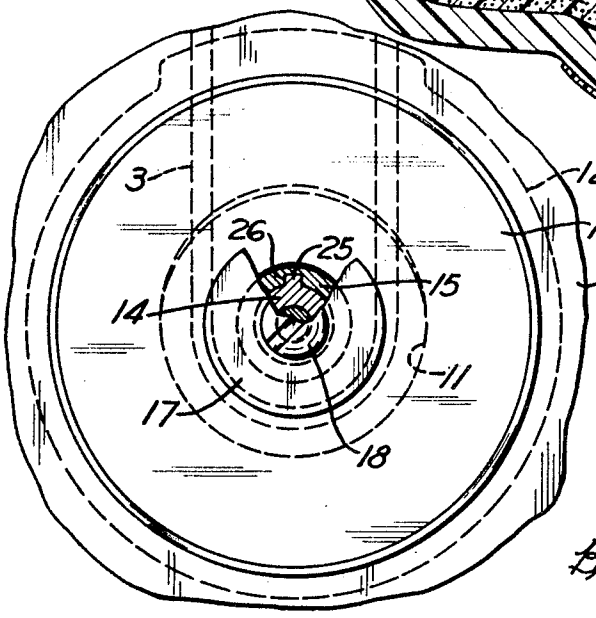

Fig. 4

INVENTOR.
CARL H. BRINKHOFF
BY
Brown, Critchlow, Flick & Peckham
ATTORNEYS.

July 15, 1969 C. H. BRINKHOFF 3,454,964

ADJUSTABLE EAR PROTECTOR

Filed May 3, 1967 3 Sheets-Sheet 3

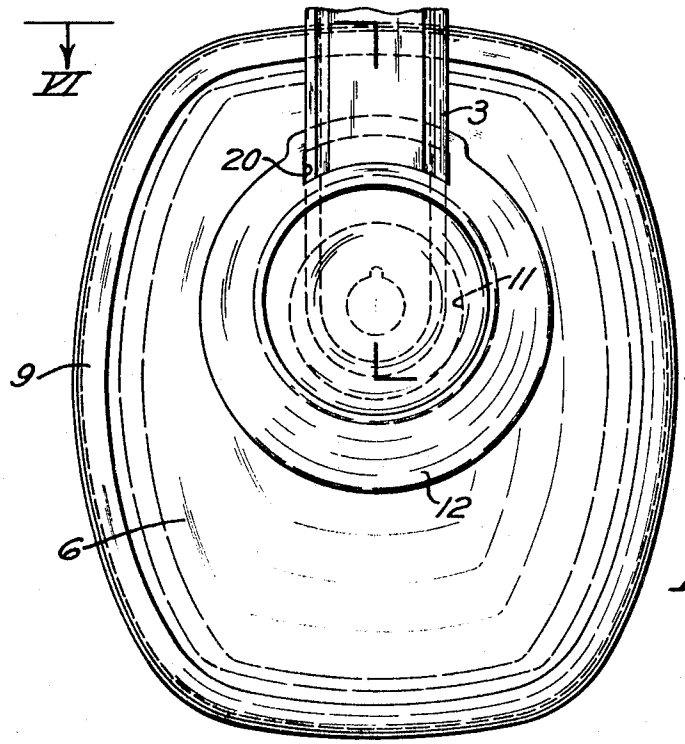

Fig.5

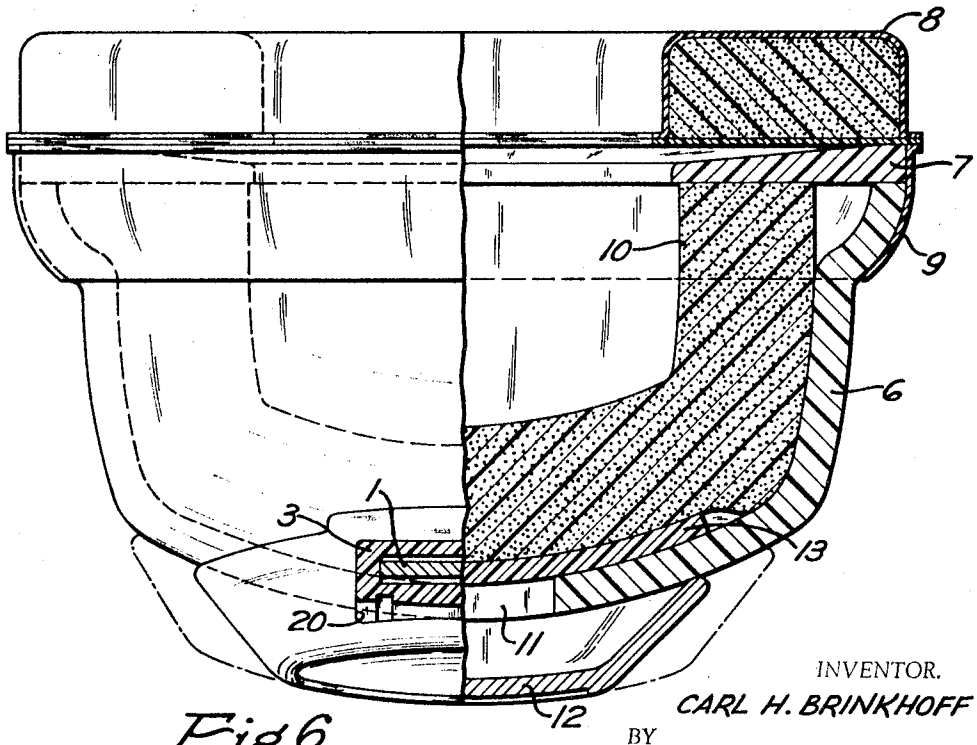

Fig.6

INVENTOR.
CARL H. BRINKHOFF
BY
Brown, Critchlow, Flick & Peckham
ATTORNEYS.

United States Patent Office

3,454,964

Patented July 15, 1969

3,454,964

ADJUSTABLE EAR PROTECTOR

Carl H. Brinkhoff, Pittsburgh, Pa., asignor to Mine Safety Appliances Company, Pittsburgh, Pa., a corporation of Pennsylvania

Filed May 3, 1967, Ser. No. 635,841

Int. Cl. A41d *21/00*

U.S. Cl. 2—209 7 Claims

ABSTRACT OF THE DISCLOSURE

An ear protector cup has a spherical back wall provided with an opening through it. The wall is clamped between the edge of a dished hub engaging its outer surface around the opening, and a clamping disc engaging the inner surface of the wall and connected to the hub by a fastener in the opening. A headband is secured at one end to the hub. The back opening in the cup is large enough to permit the cup to be adjusted in all directions across the edge of the hub.

It is among the objects of this invention to provide an ear protector, in which the ear-enclosing cup can be adjusted in all directions relative to the supporting headband, and in which the headband can be pivoted 360° relative to the cup.

In accordance with this invention, the back of the ear-enclosing cup is provided with an opening and spherical inner and outer surfaces, the outer surface being engaged by the edge of a dished hub that surrounds the opening. A resilient disc inside the cup engages its inner surface and also covers the opening. The disc and hub are fastened together in order to clamp the back of the cup between them. The cup is supported by a headband that has one end secured to the hub. The opening in the back of the cup is large enough to permit the cup to be slid in all directions across the edge of the hub.

The preferred embodiment of the invention is illustrated in the accompanying drawings, in which

FIG. 1 is a side view of my ear protector;

FIG. 2 is a view of the front of one of the cups, taken on the line II—II of FIG. 1;

FIG. 3 is an enlarged longitudinal section of the cup and hub, taken on the line III—III of FIG. 2;

FIG. 4 is a fragmentary view, taken on the line IV—IV of FIG. 3;

FIG. 5 is an enlarged view of the outside of one of the hubs and cups;

FIG. 6 is a further enlarged plan view and cross section, taken on the line VI—VI of FIG. 5;

FIG. 7 is an enlarged fragmentary plan view of the headband with part of the sheath broken away; and

FIG. 8 is a cross section taken on the line VIII—VIII of FIG. 7.

Referring to FIG. 1 of the drawings, an adjustable headband is formed from two overlapping spring metal bands **1** and **2** held in frictional engagement with each other by means of two surrounding sheaths **3** and **4** that may be made of rubber or a synthetic plastic that is slightly flexible. When the headband is adjusted to its shortest length, as shown, the upper ends of the two sheaths engage each other midway between the ends of the band. To lower ends of the headband are connected with a pair of ear cups.

As shown in FIGS. 3 and 6, each cup has a rigid body **6**, to the front edge of which an inwardly projecting flange **7** is attached. A cushion ring **8** is held against the front of the flange by means of a skirt **9** stretched over the front portion of the cup body. The cushion is

intended to engage the head around an ear, with the ear projecting into the cup. Inside the cup there is a thick lining **10** of foam rubber or plastic to deaden sound.

The back wall of the cup is a section of a sphere and has a large opening **11** through it, preferably located nearer the top than the bottom. Slidingly engaging the outer surface of the back is the edge of a circular concave or dished hub **12**. The diameter of the hub at its edge is considerably greater than the diameter of opening **11** and the hub always covers the opening. Inside the cup there is a circular resilient clamping disc **13** that slidingly engages the inner surface of the back wall around the opening therein and therefore covers and seals the inner end of the opening. The central portion of this disc is connected to the hub in such a manner as to cause the disc to become concave and conform to the adjoining surface of the cup.

For fastening the disc and hub together, it is preferred that the center of the hub be provided with an integral boss **14** that projects into opening **11** in the cup. This boss fits in a bushing **15** that extends through a central hole **16** in the disc and that is provided with a head **17** engaging the inner surface of the disc around that hole. The boss and the head of the bushing are drawn toward each other by a screw **18** extending through the bushing and into a threaded axial opening **19** in the boss. By turning this screw one way or the other, the pressure of the disc and hub against the back wall of the cup can be adjusted. The pressure is always maintained great enough to clamp the cup between the hub and disc, but not so great as to prevent the wall from being slid manually in any desired direction across the edge of the hub when desired. The size of cup opening **11** determines the extent of lateral movement of the cup relative to the hub. The opening is made as large as possible without permitting any part of it to extend outwardly beyond the edge of the hub when the diametrically opposite wall of the opening engages the side of the bushing.

In order to connect the adjoining end of the headband with the cup, the upper part of the side wall of the hub is provided with a circumferential slot **20** (FIG. 5), down through which the end of the headband extends. The lower end of the metal band **1** inside the hub is provided with a hole **21**, through which the hub boss extends. The hole may be small enough so that the inner end of the bushing will engage the band around the hole and press it against a shoulder **22** at the outer end of the boss to limit tightening of the screw. The side walls of the sheath **3** surrounding the metal band are provided with larger holes **23** to permit them to encircle the shoulder and the bushing.

Since rotation of the headband around the cup will necessarily turn the hub relative to the cup, it is desirable to prevent this turning from rotating the hub boss in the bushing and loosening the screw. Accordingly, the boss and bushing are provided with an interengaging spline **25** and groove **26**, as shown in FIG. 4, so that the boss and bushing will always have to rotate together. The upper part of the hole **21** in the metal band may be provided with a notch to receive the outer end of the spline.

In order to increase the length of the headband, the two sheaths **3** and **4** are grasped in the hands and pulled away from each other. This causes the two metal bands to slide lengthwise on each other. They are prevented from being pulled entirely apart by a struck-out tongue **28** near the end of band **2** entering a hole **29** in the other band, as shown in FIGS. 7 and 8. Due to the direction in which the tongue points, it readily emerges from the hole when the two metal bands are pushed toward each other again to shorten the headband.

With the ear protector construction explained herein,

the ear cups are fully adjustable because they can be slid up and down across the hubs and also forward and backward. The spherical backs of the cups cause the cups to tilt relative to the hubs as they are moved across them. If it is desired to wear the headband around the back of the head, it can be swung back to that position because the hubs and discs can rotate against the cups. On the other hand, it is sometimes wished to have the headband extend down under the chin. This can be accomplished by simply swinging the band forward and down. The cups offer no resistance to swinging the headband to any desired position. In any position of the cups relative to the hubs and headband, the openings in the backs of the cups remain sealed by the clamping discs.

According to the provisions of the patent statutes, I have explained the principle of my invention and have illustrated and described what I now consider to represent its best embodiment. However, I desire to have it understood that, within the scope of the appended claims, the invention may be practiced otherwise than as specifically illustrated and described.

I claim:

1. An adjustable ear protector comprising a cup provided with an open front adapted to engage a human head around an ear, the cup having a back wall provided with an opening therethrough and with smooth spherical inner and outer surfaces, a dished hub having its edge slidingly engaging said outer surface around said opening, a resilient clamping disc inside the cup slidingly engaging the inner surface of the cup back and covering said opening, fastening means extending through said disc and opening and secured in said hub for clamping the cup back between them, and a headband having an end secured to the hub, said opening being large enough to permit the cup back to be slid in all directions across the edge of the hub to adjust the cup relative to the hub.

2. An adjustable ear protector according to claim 1, in which said hub is provided interiorly with a central boss receiving said fastening means and also is provided with a lateral slot, and said headband extends through said slot and is fastened to said boss.

3. An adjustable ear protector according to claim 1, in which said hub is provided interiorly with a central boss, and said fastening means includes a headed bushing extending outwardly through said disc and around said boss, and a screw extending outwardly through the bushing and screwed into the boss to join them together.

4. An adjustable ear protector according to claim 3, in which said boss and bushing are provided with an interengaging spline and groove to prevent relative rotation.

5. An adjustable ear protector according to claim 3, in which said hub is provided with a lateral slot, the headband extends into the hub through the slot, and the end of the headband is provided with a hole receiving said boss at the outer end of said bushing.

6. An adjustable ear protector according to claim 1, in which there are two of said cups and hubs, said headband includes two overlapping spring metal bands having free inner ends and having outer ends connected to said hubs, and a pair of sheaths surround said bands and hold them face to face in frictional engagement with each other, one of the metal bands being provided with a hole and the free end of the other band being provided with a projection for entering said hole when the two bands are moved lengthwise away from each other a predetermined distance, whereby to limit the extent of said lengthwise movement.

7. An adjustable ear protector according to claim 1, in which all of said hub except its edge is spaced from the cup.

References Cited

UNITED STATES PATENTS

2,437,049	3/1948	Salisbury et al.	2—209 X
2,754,519	7/1956	Kindel	2—209
2,784,407	3/1957	Ladd	2—209 X
2,844,820	7/1958	Austin et al.	2—3 X
2,858,544	11/1958	Roth	2—209

HERBERT F. ROSS, Primary Examiner

U.S. Cl. X.R.

2—3; 179—156