May 11, 1948. W. W. HANSEN 2,441,145

SELECTOR SYSTEM

Filed July 31, 1943 2 Sheets-Sheet 1

FIG. 1

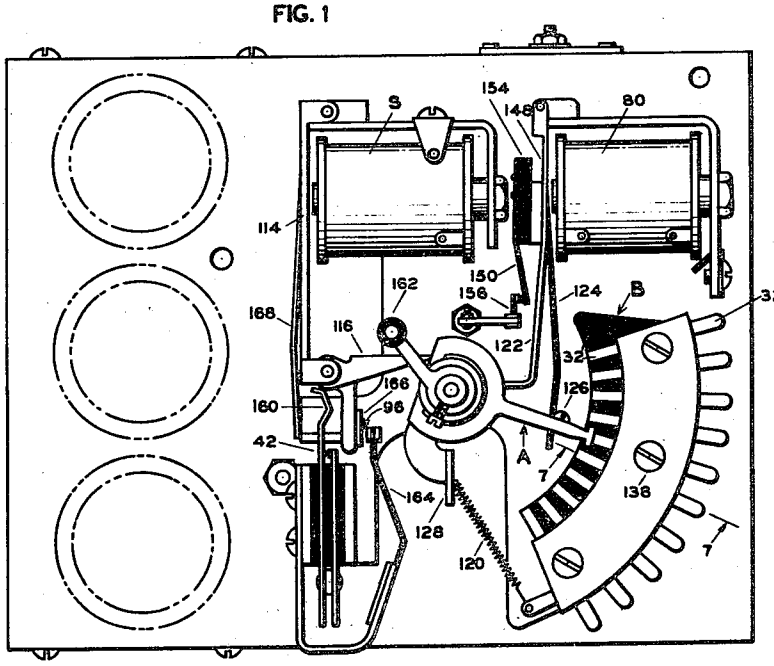

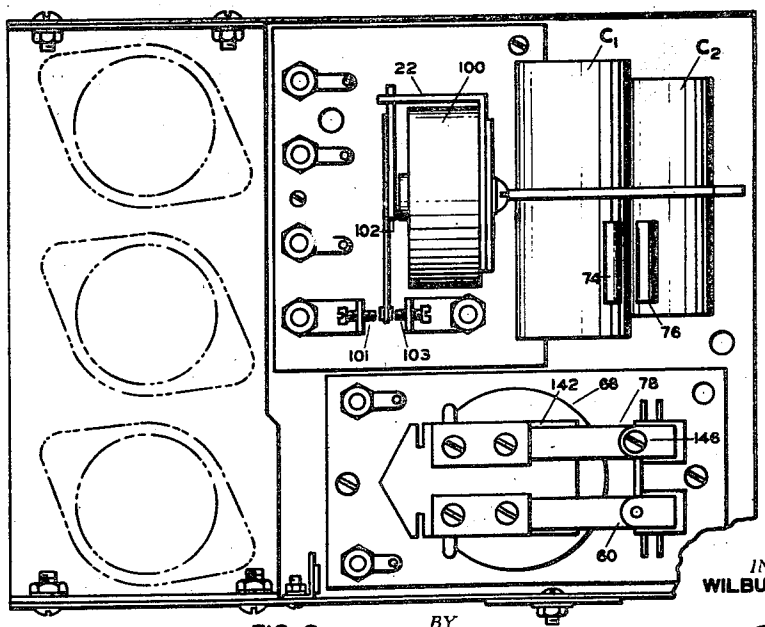

FIG. 2

INVENTOR
WILBUR W. HANSEN

BY

William D. Hall.
ATTORNEY

May 11, 1948. W. W. HANSEN 2,441,145

SELECTOR SYSTEM

Filed July 31, 1943 2 Sheets-Sheet 2

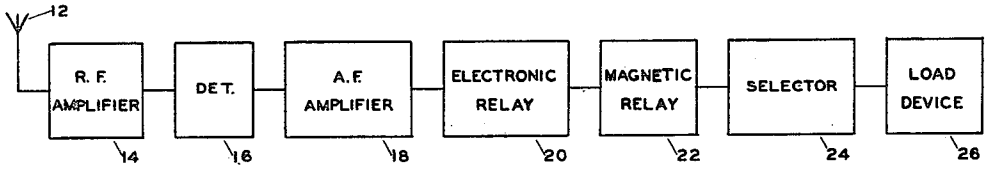

FIG. 3

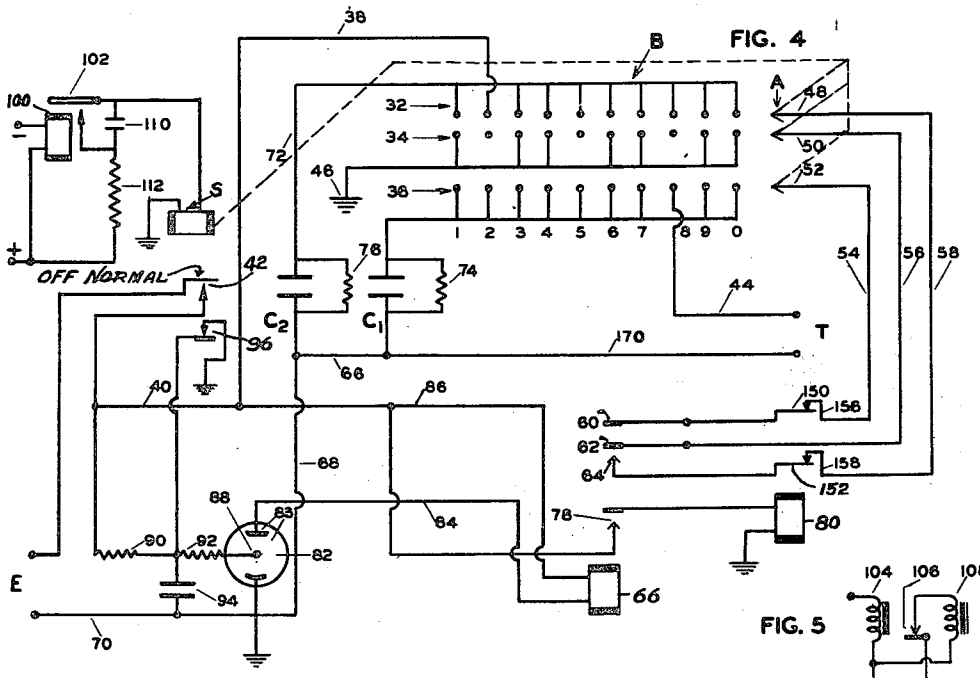

FIG. 4

FIG. 5

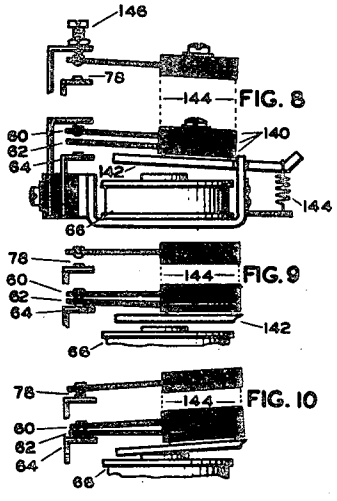

FIG. 8

FIG. 9

FIG. 10

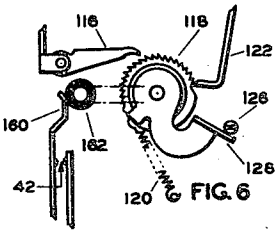

FIG. 6

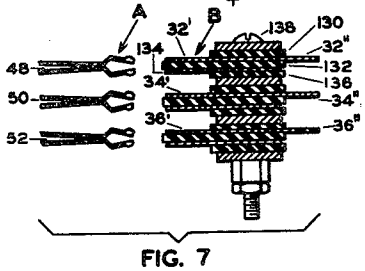

FIG. 7

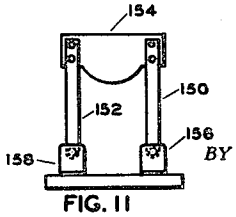

FIG. 11

INVENTOR
WILBUR W. HANSEN
BY
William D. Hall.
ATTORNEY

Patented May 11, 1948

2,441,145

UNITED STATES PATENT OFFICE

2,441,145

SELECTOR SYSTEM

Wilbur W. Hansen, Avon, N. J.

Application July 31, 1943, Serial No. 496,939

16 Claims. (Cl. 177—353)

(Granted under the act of March 3, 1883, as amended April 30, 1928; 370 O. G. 757)

1

The invention described herein may be manufactured and used by or for the Government for governmental purposes, without the payment to me of any royalty thereon.

This invention relates to selector systems, and more particularly to such systems discriminatorily responsive to grouped combinations of pulses for control of remote mechanisms.

In systems of this character, particularly when the remote control is by means of radio energy, it is important to guard against intentional interference by others, and accidental interference, whether man-made or natural. It is obviously important to guard against error when the selector is used to detonate a remote explosive device, say a land mine, or to arm the fuse of an explosive device which is later detonated by local contact.

The primary object of my invention is to generally improve code selector systems.

Another object is to incorporate the above mentioned safeguards.

A further object of the present invention is to provide a selector system controlled by the transmission of a special code combination of pulses, and in such system to guard against response to the transmission of the correct code numbers mixed with other incorrect numbers, or the transmission of the correct code numbers but with long delay between some of the successive numbers, or the transmission of man-made or natural pulses of static which might simulate one or more numbers of the code.

In accordance with one feature and object of my invention, the receipt of any incorrect number wipes out the effect of all previously received numbers, including even correct ones. Moreover, any appreciable delay between the transmission of any two numbers of the code combination will wipe out the effect of all previously received numbers. The system may be so arranged that the entire code-combination of correct numbers must be received in proper sequence within a very short time, say ten seconds, or the selector will not respond.

The complete apparatus preferably includes selective radio and audio receiving circuits, thereby providing first and second stages of selectivity prior to the action of the selector, the latter providing a third stage of selectivity. However, the complete apparatus is not claimed in the present application, which instead is directed more particularly to the third stage selector. The complete apparatus, including the first and second stages, is more fully disclosed and claimed in a

2

copending application, Serial No. 599,299, filed June 13, 1945, for "Selector circuit."

To accomplish the foregoing general objects, and other more specific objects which will hereinafter appear, my invention resides in the selector elements and their relation one to the other as hereinafter are more particularly described in the specification, and sought to be defined in the claims. The specification is accompanied by drawings in which

Figure 1 shows one particular selector mechansim embodying features of my invention;

Figure 2 shows the opposite side of the same;

Figure 3 is a block diagram explanatory of the complete apparatus;

Figure 4 is a schematic wiring diagram of a selector embodying features of my invention;

Figure 5 illustrates a modification of a detail;

Figure 6 shows the pawl, ratchet, and supply switch mechanism;

Figure 7 is a transverse section through the banks of contacts of the selector, taken approximately in the plane of the line 7—7 in Figure 1, but with the arms separated from the contacts for clarity;

Figures 8, 9 and 10 show successive positions in the operation of the bridging and reset relay; and

Figure 11 shows a detail of the bridge opening switch.

The selector as specifically disclosed herein forms a part of a radio-actuated system intended for the remote control of a military weapon, typically, a land mine. The arrangement for this purpose is diagrammatically illustrated by the box diagram of Figure 3.

Referring to that figure, radio-frequency energy collected on an antenna 12 is fed to a preferably highly selective radio-frequency amplifier and buffer stage 14, which helps prevent reradiation from a preferably superregenerative detector stage 16. The latter may be shielded and operated at low power level to prevent reradiation which would reveal the presence of the land mine to an enemy. The authorized transmission may consist of a carrier of predetermined frequency modulated at predetermined audio frequency, in which case the detector stage 16 is preferably followed by a so-called "peaked" or selective audio-frequency stage 18. Any enemy transmission would have to employ the correct combination of radio and audio frequencies to prove effective. These circuits are set forth in greater detail in a copending application, Serial No. 599,299, previously referred to.

The output from the audio-frequency ampli-

fier 18 may be used to operate an electronic relay 20, controlling a sensitive magnetic relay 22, which in turn operates a stepping magnet in a selector 24. If the proper multiple-digit code requirement is met at the selector 24, an output is obtained which may be used to actuate whatever load device 26 is sought to be remotely controlled.

The wiring of the selector is shown in Figure 4. The selector comprises a plurality of banks of contacts generally designated B, arms generally designated A for slidably engaging said banks, and a stepping magnet S which actuates a pawl-and-ratchet mechanism for moving the arms A along contact banks B. The selector system further comprises one or more storage capacitors (C_1 and C_2), and a current source E for charging the same. The source E and the capacitors are so connected to the contacts that one of the capacitors is charged if the arms A are stepped to and bridge predetermined contacts corresponding to a first digit in the code number. A charge from the first capacitor C_1 is subsequently transferred to the second capacitor C_2 if the arms A are next stepped to and bridge other predetermined contacts corresponding to a second digit in the code. Output terminals T are so connected to certain of the contacts that a charge from the second capacitor C_2 is transferred to the output terminals if the arms A are stepped to and bridge predetermined contacts corresponding to a third digit.

It will be understood that for a simpler code number using only two digits, a single storage capacitor might be employed, and that for a more complex code number using four digits, three storage capacitors might be employed, instead of two, as here shown.

In the specific selector here illustrated, there are three banks of contacts generaly designated 32, 34, and 36. These may form part of a standard step-by-step relay such as is commonly employed in dial telephone switching. One of these banks, in this case the bank 32, has all of its contacts but one connected together and to the storage capacitor C_2. The unique contact, in this case the number 2 contact, is connected by means of wires 38 and 40 to a normally closed supply switch 42 and potential source E. All of the contacts but one of contact bank 36 are connected together and to the storage capacitor C_1. The unique contact, in this case the number 8 contact, is connected by means of wire 44 to the output terminal T. The third bank, in this case the bank 34, has all of its contacts but three connected together and to ground as indicated at 46, the three open contacts, in this case contacts numbers 2, 5, and 8, corresponding to the predetermined code combination. Two of the open contacts correspond to the unique contacts of banks 32 and 36. The code number 258 is arbitrary, and has been selected solely for illustration.

There are three arms, 48, 50 and 52, which respectively slidably engage the contact banks 32, 34, and 36. These arms are connected by means of leads 54, 56, and 58 to bridging contacts 60, 62, and 64, which when closed bridge the arms, and consequently bridge the contacts across which the arms are disposed when the bridging contacts are closed. As will later appear, the bridging contacts are closed by a magnet 66 when the arms come to rest or dwell at the end of any series of pulses. The contacts on which the arms happen to come to rest may, for convenience, be called the "dwell contacts." The bridging contacts are open as the arms are stepped toward the dwell contacts, and are closed when the arms reach and dwell on the dwell contacts.

It will be evident that if the arms are stepped to contacts number 2, the bridging circuit 54, 58 will connect potential source E through the supply switch 42, conductor 40, and conductor 38, to the bottom bank 36, and thence to the first storage capacitor C_1, the circuit being completed by means of conductors 66, 68, and 70. If, however, the arms are stepped to some other number, say 1, or 3, etc., the bridging circuit 54, 56, 58 connects the upper and lower banks not only to each other but also to the middle bank 34 and thence to ground at 46. If the incorrect number happens to be another number in the code, say 5 or 8, so that the banks are not grounded, there is nevertheless no charging of condenser C_1 from source E because source E is connected through wires 40 and 38 to only the top contact number 2, and not to any other contact.

Assuming now that the arms have been stepped properly to contacts number 2, and reset, and are then stepped properly to the next number of the code (in this case, contacts number 5), it will be seen that the bridging circuit 54, 58 will now connect the bottom bank to the top bank and so transfer a charge from condenser C_1 upwardly from the bottom bank to the top bank and thence through conductor 72 to the second storage condenser C_2. If, however, the transmitted second number is incorrect, so that the arms dwell on contacts other than number 5, the bridging circuits 54, 56, 58 connect the top, middle, and bottom banks together and to ground. In this way, the charge on capacitor C_1 is not only not transferred to capacitor C_2, but is discharged to ground, thus "wiping out" the correct first digit. If the arms happen to dwell on contacts number 2, there will be no effect other than renewed charging of capacitor C_1, and if the arms happen to dwell on contacts number 8, there will be no effect on terminal T because capacitor C_2 has not yet received a charge.

Assuming that correct first and second numbers have been transmitted so that capacitor C_2 is charged, and that the arms, after being reset, are stepped to the correct third number, in this case the number 8, the bridging circuits 54, 58 connect the top bank to contact 8 on the bottom bank, thereby connecting capacitor C_2 through wire 72 and the bridging circuits to wire 44 and so to the upper terminal T. In this way a charge from the storage capacitor C_2 is fed to the output terminals for utilization. If, however, the arms are stepped to some incorrect third number, the bridging circuit 54, 56, 58 connect the top and bottom banks to the grounded middle bank, and so discharge the capacitors C_1 and C_2, thereby wiping out the effect of the previously transmitted correct numbers.

As a further precaution, I provide leak resistors 74 and 76 across capacitors C_1 and C_2 respectively. These leak resistors may be adjusted to substantially discharge the capacitors in a desired short time, so that the transmission of the successive code numbers must be completed well within that time. In the specific case here shown, the leak resistors are selected to discharge the capacitors to $\frac{3}{10}$ the initial charge in 10 seconds.

The bridging relay acts also as a reset relay. More specifically, magnet 66 functions to close not only the bridging contact 60, 62, 64, but also reset contacts 78, disposed in series with a reset

magnet 66, which in turn disengages a holding pawl for the arms. Reset contact 78 closes somewhat later than bridging contacts 60, 62, 64, thus providing a dwell period at the contact to which the arms are stepped.

The mechanism for controlling the bridging and reset relay includes a cold cathode thyratron 82, the plate circuit of which is connected to magnet 66 by means of wire 84. The opposite end of the magnet is connected to source E through wires 86 and 40 and supply switch 42. Assuming the supply switch closed, it will be evident that magnet 66 is energized whenever thyratron 82 fires.

The grid 88 of the thyratron is also connected to source E but through resistors 90 and 92. A firing capacitor 94 is connected across the grid and cathode of the thyratron, and is itself shunted by shorting contacts 96. The shorting contacts are mechanically actuated by stepping magnet S, thus preventing the building up of a charge on the firing capacitor 94 during stepping of the arms, or, considered from a different viewpoint, the shorting contacts 96 hold the grid potential of the thyratron down to the cathode potential, thus preventing firing of the thyratron. However, when the arms reach the last contacts (dwell contacts) to which they are being stepped, the resulting dwell period permits an appreciable charge to build up on the firing capacitor 94, and the grid 88 of the thyratron goes sufficiently positive to fire the thyratron, whereupon magnet 66 is energized, the bridging contacts and then the reset contacts are closed, the holding pawl of the arms is released, and the arms are reset by a suitable restoring spring. The resistors 90 and 92 prevent appreciable grid current flow when the thyratron fires or, in other words, they reduce the potential from source E to a low enough value at the grid so that the plate 83 of the thyratron receives the main current flow through the thyratron. The resistor 90 is selected to form with capacitor 94 an RC combination having a suitable time constant relative to the stepping frequency, which is also the closing frequency of the shorting contacts 96.

In connection with Figure 3, it was mentioned that a relay tube 20 controls a sensitive magnetic relay 22, which in turn controls the stepping magnet of the selector 24. In Figure 4 the sensitive relay is indicated by a magnet 100, controlling an armature 102, which when closed feeds current through the stepping magnet S. I have equally successfully employed a simpler circuit diagrammatically shown in Figure 5, in which the sensitive relay magnet 104 closes contacts 106, thereby energizing a stepping magnet 108. The capacitor 110 and resistor 112 of Figure 4 are eliminated in the arrangement of Figure 5, because the relay of Figure 5 has an anti-induction winding to prevent sparking. When the relay has no anti-induction winding the circuit of Figure 4 is preferable.

A better understanding of the construction and operation of the present embodiment of my invention will be gained by reference to other figures of the drawing showing the structural arrangement of the relay elements. Referring first to Figure 2, the sensitive relay which controls the stepping magnet is shown at 22, this comprising a normally deenergized magnet 100 and an armature and movable contact 102, cooperating with a stationary contact 101. In the present circuit the other contact 103 serves merely as a motion-limiting device.

Referring now to Figure 1, the stepping magnet or motor magnet is indicated at S and when energized it attracts an armature 114, the end of which carries a pawl 116, for cooperation with a ratchet which is not visible in Figure 1 because it is concealed by the contact arms A. However, in Figure 6 the contact arms have been omitted, thus exposing the ratchet 118. The ratchet works against the pull of a restoring spring 120, and is held in stepped position by a check pawl 122. The check pawl is normally urged inwardly by a leaf spring 124 (Figure 1) bearing against a stationary stop pin 126. Pin 126 acts also to limit the return movement of the contact arms. This will be clear from Figure 6, in which the ratchet has been moved back to initial position by restoring spring 120, at which time a stop arm 128 bears against the stop pin 126. It will be understood that the teeth of the ratchet correspond to the successive contacts in the banks B (Figure 1).

The construction of the banks and arms will be clear from Figure 7 in which it will be seen that the arms 48, 50, and 52 are each made up of two thin sheet-metal arms, made of a suitable material such as Phosphor bronze. The two parts of each arm are connected together at their hub ends. In Figure 7, the arms are shown separated from the contact banks, but in assembled position each double arm straddles one of the banks. The individual contacts are indicated at 32', 34', and 36'. These are extended at the right-hand end to form the soldering lugs 32'', 34'', 36''. The contacts are clamped between arcuate pieces of insulation 130 and 132. A continuous strip of metal, 134, is disposed between insulation strip 132 and the arms 48, which thus function to connect one of the contacts 32' to the bottom plate 134. The purpose of this construction is merely to avoid the need for making a flexible or slip ring connection to the movable arms, and instead an external connection may readily be made at the end of the bottom plate 134. The top bank may be completed by means of another strip or insulation 136. The second and third banks of contacts are constructed in similar fashion, and all three banks are held tightly together in assembled relationship by means of suitable screws 138. These screws may also function to hold the banks on the chassis plate of the complete selector.

In order not to confuse the drawing the connections between the soldering lugs of the contacts have been omitted in Figure 1, but it will be understood that a single conductor may be used running from one contact to another but skipping the unique contact, this unique contact corresponding to a code number. In the case of the middle bank, three such contacts are skipped, two of them corresponding to the unique contacts in the top and bottom banks, and the third corresponding to the middle code number. Other connections to the various auxiliary switches, as well as the details of the electron tube sockets, and the capacitors and resistors associated therewith, have been omitted for the same reason.

The construction of the bridging and reset relay may be described with reference to Figures 2 and 8 through 10. The magnet is numbered 66, as in Figure 4. In Figure 2 only the top bridging contact 60 is visible, but in Figures 8, 9, and 10 it will be seen that another bridging contact 62 is disposed between the top bridging contact and the stationary contact 64. The movable contacts are mounted between pieces of insulation 140 on an iron armature 142 normally held upward by a

pull spring 144. In Figure 8 the parts are shown in raised position. When the magnet 66 is energized the armature is pulled downwardly, and when moved only part way down the spring contact 62 bears against stationary contact 64, following which the spring contact 68 bears against spring contact 62, thus bringing the parts to the position shown in Figure 9, at which time the bridging contacts are closed. This, it will be recollected on reference to Figure 4, connects the three arms A together.

Reverting to Figure 2, the armature 142 carries a reset contact 70 in addition to the bridging contacts just described. In order to show the delayed action of the reset contacts, they have been drawn above the bridging contacts in Figures 8, 9, and 10, instead of alongside the same. It will be understood, however, that the movable contacts are all mounted on and move with the armature 142, this being schematically indicated in Figures 8, 9, and 10 by the dotted lines 144. The screw 146 in Figures 2 and 8 is here used merely as a motion-limiting stop to limit outward movement of the contacts. This screw has accordingly been omitted in Figures 9 and 10. By comparison of Figures 8, 9, and 10, it will be seen that all of the contacts are open in Figure 8 when magnet 66 is deenergized, and that all of the contacts are closed in Figure 10 after the magnet has been energized for a brief instant, but that in the intermediate position shown in Figure 9 the bridging contacts 60, 62, and 64 have been closed but that the reset contacts 70 are still open. In effect the magnet 66 closes the bridging contacts first, and then only after an instant of delay closes the reset contacts. The delay therebetween increases the dwell time available to charge the storage condenser C_1 (Figure 4). This is desirable, though not essential, because there is also some delay due to the time required for current to build up in coil 80 and to pull in the check pawl 122.

The restoring action of the arms A is provided by releasing the holding pawl 122 previously mentioned, and referring to Figure 1 it will be seen that this is accomplished by energization of the reset magnet 80 which attracts an armature 148, which may if desired be an extension of the pawl arm. The armature 148 also carries a spaced pair of contacts 150, 152 (see Figure 11) mounted on a piece of insulation 154. These normally engage stationary contacts 156, 158, but the contacts are opened when the reset magnet 80 is energized, as will be clear from inspection of Figure 1.

Referring now to Figure 4, it will be seen that the contacts in question act as switches in the bridging wires 54 and 58 leading to the bridging contacts. These bridge-opening switches destroy the bridging action during return movement of the arms A. This prevents grounding of the storage condensers C_1 and C_2 through the middle bank of contacts 34 to the ground 46. Similar precaution is not necessary during the upward stepping movement of the arms A because at that time the bridging relay is still open, whereas during the return movement the bridging relay is closed.

In Figure 4 reference was made to a supply switch 42, and referring to Figures 1 and 6 it will be seen that the switch in question comprises contacts one of which has a camming portion 160 which is engaged by an insulation roller 162 when the arms are in the initial or rest position shown in Figure 6. However, the moment the arms are stepped to any digit from one through zero, the roller 162 leaves the camming portion 160 and permits the contacts to close.

Reverting to Figure 4, the main purpose of supply switch 42 is to open the thyratron 82 after it has been fired. During operation of the stepping relay the supply switch is closed, so that when the series of impulses corresponding to any digit has been completed, with a resulting dwell long enough to charge the firing condenser 94, the thyratron 82 fires. This in turn energizes the magnet 66 of the bridging and reset relay with consequent resetting of the arms to initial position, at which time the supply switch 42 is opened, thus cutting off the plate and grid supplies to the thyratron, and so opening the same.

In Figure 4 mention was made of shorting contacts 96 which shunt the firing condenser 94 during each step of the selector. Referring to Figure 1, it will be seen that the shorting switch is made up of a yieldable stationary contact 164 which is engaged by a movable contact 166 mounted on pawl 116 and moved by armature 114. Each time the stepping magnet receives a pulse of energy, the shorting contact 96 is grounded, thus shorting the firing condenser 94, and preventing it from accumulating enough charge to fire the thyratron during normal progressive stepping of the arms. After each pulse the pawl immediately returns to initial position under influence of a restoring spring 168. When the arms reach the dwell contacts and the pawl is returned, the contact 96 is open, thus permitting the firing condenser 94 to acquire enough charge to fire the thyratron and so operate the bridging and reset relay.

It is believed that the construction and operation of my improved selector system will be understood from the foregoing detailed description. Referring to Figure 3, the received signal must first meet the selectivity requirements as to radio-frequency, and audio-frequency modulation, and if these requirements are met, any pulses or keying of the signal are transmitted to the stepping magnet S (Figures 1 and 4) of the selector. These step the arms A along the contacts B to the dwell contacts. During this stepping operation, the supply switch 42 is closed and the firing condenser 94 tends to charge but is repeatedly shorted by the shorting switch 96. At the dwell contacts, however, the firing condenser accumulates enough charge to fire thyratron 82, which then energizes magnet 66 of the bridging and reset relay. This first closes the bridging contacts 60, 62, and 64, with results which depend on whether the dwell contact is correct according to the preselected code. After closing of the bridging contacts, the reset contacts are closed, thus energizing the reset magnet 80 which in turn pulls out the holding pawl and so permits the restoring spring 120 (Figure 6) to pull the arms back to initial position. When the arms reach initial position, the supply switch 42 is opened, thus opening thyratron 82 and so deenergizing the bridging and reset magnet 66. Thereupon another series of impulses are received, which again step the arms to dwell contacts.

If the dwell contacts turn out to be correct, which in the present case requires the numbers 2, 5, and 8, the action is as follows: when dwell contacts number 2 are bridged, supply current from the source E flows through supply switch 42 and wires 40 and 38 through the upper contact to the lower bank and thence to storage capacitor C_1, thus charging that capacitor. During return movement of the contact arms the capacitor is

not discharged because bridge-opening switches 150, 152 are opened. When the arms are next stepped to contacts number 5, some of the charge on the capacitor C_1 is transmitted from the lower bank to the upper bank and thence through conductor 72 to the second storage capacitor C_2, thus charging that capacitor. During the return movement of the arms, the capacitors are not discharged because the bridge-opening switches 150, 152 are open. If the arms are next stepped to contacts number 8, some of the charge of the second storage capacitor C_2 is transmitted through wire 72 and the upper bank to the lower contact number 8 and thence through wire 44 to the upper terminal T. The circuit is completed by wires 170, 66, and 68 to ground or to lower terminal E. The resulting pulse of energy may be utilized for any desired purpose, as for example to fire another thyratron or a sensitive relay, which in turn is arranged to detonate an explosive or to arm a weapon or for any other remote-control purpose.

If any received number differs from a code number, both storage capacitors are grounded and discharged. If the received numbers are in improper sequence the condensers will not be charged, or the charge will not be transferred. Even if the correct numbers are received in correct sequence but only after some delay, the storage capacitors are discharged by the operation of the leak resistors 74, 76. Any irregularity or delay in transmitting a particular group or series of pulses for a particular number will permit the firing condenser to fire the thyratron and so restore the arms to initial position.

It is believed that the advantages of my improved selector system will be apparent from the foregoing description. It will also be apparent that while I have shown and described my invention in a preferred form, many changes and modifications may be made in the structure disclosed without departing from the spirit of the invention, as sought to be defined in the following claims.

I claim:

1. A selector system comprising an electrical power source, a storage condenser, means to connect the power source to the storage condenser when a correct first signal is received but not when any other signal is received, means to transfer a charge from the storage condenser when a correct second signal is received but to ground and discharge the condenser if any other second signal is received, and a leak resistor connected across said storage condenser to substantially discharge the same in a predetermined short time if the correct first and second signals have not been received within that time.

2. A selector system comprising an electrical power source, first and second storage condensers, means to connect the power source to the first storage condenser when a correct first signal is received but not when any other signal is received, means to transfer a charge from the first storage condenser to the second storage condenser when a correct second signal is received but to ground and discharge the first condenser if any other second signal is received, and means to connect the second storage condenser to output terminals for utilization of the charge when the correct third signal is received, but to ground and discharge the first and second condensers if any other third signal is received.

3. A selector system comprising an electrical power source, first and second storage condensers, means to connect the power source to the first storage condenser when a correct first signal is received, means to transfer a charge from the first storage condenser to the second storage condenser when a correct second signal is received, means to connect the second storage condenser to output terminals for utilization of the charge when the correct third signal is received, and means to substantially discharge said first and second storage condensers in a predetermined short time if the correct first, second, and third signals have not been received within that time.

4. A selector system comprising an electrical power source, first and second storage condensers, means to connect the power source to the first storage condenser when a correct first signal is received but not when any other signal is received, means to transfer a charge from the first storage condenser to the second storage condenser when a correct second signal is received but to ground and discharge the first condenser if any other second signal is received, means to connect the second storage condenser to output terminals for utilization of the charge when the correct third signal is received, but to ground and discharge the first and second condensers if any other third signal is received, and leak resistors connected across said first and second storage condensers to substantially discharge the same in a predetermined short time if the correct first, second, and third signals have not been received within that time.

5. A selector system comprising a plurality of banks of contacts, arms for slidably engaging said banks, a stepping magnet with pawl and ratchet mechanism for moving said arms over successive contacts of said banks, a storage capacitor, a current source for charging said capacitor, said source and capacitor being so connected to certain contacts of said banks that the capacitor is charged only if the arms are stepped to and bridge predetermined contacts, and output terminals so connected to certain of said contacts that a charge from the capacitor is transferred to the output terminals only if the arms are stepped to and bridge predetermined contacts.

6. A selector system comprising a plurality of banks of contacts, arms for slidably engaging said banks, a stepping magnet with pawl and ratchet mechanism for moving said arms over successive contacts of said banks, a storage capacitor, a current source for charging said capacitor, said source and capacitor being so connected to certain contacts of said banks that the capacitor is charged only if the arms are stepped to and bridge predetermined contacts, output terminals so connected to certain of said contacts that a charge from said capacitor is transferred to the output terminals only if the arms are stepped to and bridge predetermined contacts, and a leak resistor connected across said capacitor to discharge the same if the charge thereon is not utilized within a predetermined short time.

7. A selector system comprising a plurality of banks of contacts, arms for slidably engaging said banks, a stepping magnet with pawl and ratchet mechanism for moving said arms over successive contacts of said banks, a storage capacitor, a current source for charging said capacitor, said source and capacitor being so connected to certain contacts of said banks that the capacitor is charged only if the arms are stepped to and bridge predetermined contacts, and output terminals so connected to certain of

said contacts that a charge from the capacitor is transferred to the output terminals only if the arms are stepped to and bridge predetermined contacts, connections to discharge the capacitor when the arms bridge incorrect contacts, and bridge opening means to open during movement of the arms the bridging connection provided by the arms.

8. A selector system comprising a plurality of banks of contacts, arms for slidably engaging said banks, a stepping magnet with pawl and ratchet mechanism for moving said arms over successive contacts of said banks, a first storage capacitor, a current source for charging said capacitor, said source and capacitor being so connected to certain contacts of said banks that the capacitor is charged only if the arms are stepped to and bridge predetermined contacts, a second storage capacitor so connected to certain of said contacts that a charge from the first capacitor is transferred to the second capacitor only if the arms are stepped to and bridge predetermined contacts, and output terminals so connected to certain of said contacts that a charge from the second capacitor is transferred to the output terminals only if the arms are stepped to and bridge predetermined contacts.

9. A selector system comprising a plurality of banks of contacts, arms for slidably engaging said banks, a stepping magnet with pawl and ratchet mechanism for moving said arms over successive contacts of said banks, a first storage capacitor, a current source for charging said capacitor, said source and capacitor being so connected to certain contacts of said banks that the capacitor is charged only if the arms are stepped to and bridge predetermined contacts, a second storage capacitor so connected to certain of said contacts that a charge from the first capacitor is transferred to the second capacitor only if the arms are stepped to and bridge predetermined contacts, output terminals so connected to certain of said contacts that a charge from the second capacitor is transferred to the output terminals only if the arms are stepped to and bridge predetermined contacts, ground connections to ground and discharge the capacitors when the arms bridge incorrect contacts, and bridge opening means to open during movement of the arms the bridging connection provided by the arms.

10. A selector system comprising a plurality of banks of contacts, arms for slidably engaging said banks, a stepping magnet with pawl and ratchet mechanism for moving said arms over successive contacts of said banks, a first storage capacitor, a current source for charging said capacitor, said source and capacitor being so connected to certain contacts of said banks that the capacitor is charged only if the arms are stepped to and bridge predetermined contacts, a second storage capacitor so connected to certain of said contacts that a charge from the first capacitor is transferred to the second capacitor only if the arms are stepped to and bridge predetermined contacts, output terminals so connected to certain of said contacts that a charge from the second capacitor is transferred to the output terminals only if the arms are stepped to and bridge predetermined contacts, and a leak resistor connected across each of said capacitors to discharge the same if the charge thereon is not transferred within a predetermined short time.

11. A selector system comprising three banks of contacts, one bank having all of the contacts but one connected together and to a storage capacitor, the unique contact being connected to a current supply source, another bank having all of the contacts but one connected together and to another storage capacitor, the unique contact being connected to an output terminal, the third bank having all of its contacts but three connected together and to ground, the three open contacts corresponding to a predetermined code combination, and two of them corresponding to the aforesaid unique contacts, arms slidably engaging said banks of contacts, a stepping magnet with pawl and ratchet mechanism for moving said arms over said contacts, the arrangement being such that when the arms are stepped to the first contacts of the predetermined code one of the storage condensers is charged by the supply source, when the arms are stepped to the second contacts of the predetermined code a charge is transferred from the first storage condenser to the second storage condenser, and when the arms are stepped to the third contacts of the code a charge is transferred from the second storage condenser to the output terminal for utilization, but when the arms are stepped to any incorrect contact the storage condensers are discharged.

12. A selector system comprising three banks of contacts, one bank having all of the contacts but one connected together and to a storage capacitor, the unique contact being connected to a current supply source, another bank having all of the contacts but one connected together and to another storage capacitor, the unique contact being connected to an output terminal, the third bank having all of its contacts but three connected together and to ground, the three open contacts corresponding to a predetermined code combination, and two of them corresponding to the aforesaid unique contacts, arms slidably engaging said banks of contacts, a stepping magnet with pawl and ratchet mechanism for moving said arms over said contacts, the arrangement being such that when the arms are stepped to the first contacts of the predetermined code one of the storage condensers is charged by the supply source, when the arms are stepped to the second contacts of the predetermined code a charge is transferred from the first storage condenser to the second storage condenser, and when the arms are stepped to the third contacts of the code a charge is transferred from the second storage condenser to the output terminal for utilization, but when the arms are stepped to any incorrect contacts the storage condensers are discharged, said storage condensers further having leak resistors connected thereacross to discharge the same if the proper code combination is not received within a predetermined short time.

13. A selector system comprising three banks of contacts, one bank having all of the contacts but one connected together and to a storage capacitor, the unique contact being connected to a current supply source, another bank having all of the contacts but one connected together and to another storage capacitor, the unique contact being connected to an output terminal, the third bank having all of its contacts but three connected together and to ground, the three open contacts corresponding to a predetermined code combination, and two of them corresponding to the aforesaid unique contacts, arms slidably engaging said banks of contacts, a stepping magnet with pawl and ratchet mechanism for moving said arms over said contacts, the arrangement being such that when the arms are stepped to the first contacts of the predetermined code one of

the storage condensers is charged by the supply source, when the arms are stepped to the second contacts of the predetermined code a charge is transferred from the first storage condenser to the second storage condenser, when the arms are stepped to the third contacts of the code a charge is transferred from the second storage condenser to the output terminal for utilization, but when the arms are stepped to any incorrect contacts the storage condensers are discharged, a bridging relay for connecting the arms together when they dwell at the contact to which they have been stepped, a reset means for restoring the arms to original position, and a bridge opening switch to open the connection between the arms during their return movement.

14. A selector system comprising three banks of contacts, one bank having all of the contacts but one connected together and to a storage capacitor, the unique contact being connected to a current supply source, another bank having all of the contacts but one connected together and to another storage capacitor, the unique contact being connected to an output terminal, the third bank having all of its contacts but three connected together and to ground, the three open contacts corresponding to a predetermined code combination, and two of them corresponding to the aforesaid unique contacts, arms slidably engaging said banks of contacts, a stepping magnet with pawl and ratchet mechanism for moving said arms over said contacts, the arrangement being such that when the arms are stepped to and bridge the first set of contacts of the predetermined code one of the storage condensers is charged by the supply source, when the arms are stepped to and bridge the second set of contacts of the predetermined code a charge is transferred from the first storage condenser to the second storage condenser, and when the arms are stepped to and bridge the third set of contacts of the code a charge is transferred from the second storage condenser to the output terminal for utilization, but when the arms are stepped to and bridge any incorrect contacts at any time the storage condensers are discharged, said storage condensers further having leak resistors connected thereacross to discharge the same if the proper code combination is not received within a predetermined short time, a bridging relay for connecting the arms when they dwell at the contact to which they have been stepped, a reset means for restoring the arms to original position, and a bridge opening switch to open the connection between the arms during their return movement.

15. A selector system comprising a multi-position switch, a stepping magnet for moving said switch from a normal position, a reset means for restoring said switch to said normal position, said reset means comprising a grid-controlled electron tube, a firing circuit including a charging capacitor connected across the cathode to grid circuit of said tube, a contact operated by said stepping magnet to intermittently short circuit said capacitor upon each operation of said stepping magnet, and means in the plate circuit of the tube to operate said reset means when said tube is fired.

16. A selector system comprising a multi-position switch for selecting a circuit, a stepping magnet for moving said switch from a normal position, a reset magnet for restoring said switch to said normal position, a relay including an operating coil and a plurality of contacts, and means for controlling the operation of said relay, said last-named means comprising a grid-controlled electron tube, a potential supply source connected to the grid of said tube, a firing circuit including a charging capacitor connected across the cathode to grid circuit of said tube, means to momentarily short said capacitor each time said stepping magnet operates, a potential supply source connected to the plate of said tube through said operating coil, at least one of said contacts cooperating with said switch to control the circuit selected by said switch when said tube fires and energizes said operating coil, another of said contacts being a delayed-action contact and operating to energize said reset magnet after the closing of said one of said contacts.

WILBUR W. HANSEN.

REFERENCES CITED

The following references are of record in the file of this patent:

UNITED STATES PATENTS

Number	Name	Date
1,662,877	Almquist	Mar. 20, 1928
1,943,475	Gurley	Jan. 16, 1934
2,063,354	Thorp	Dec. 8, 1936
2,094,733	Byrnes	Oct. 5, 1937
2,110,015	Fitzgerald	Mar. 1, 1938
2,168,198	Frink	Aug. 1, 1939
2,255,162	Hart	Sept. 9, 1941
2,269,856	Nelsen	Jan. 13, 1942
2,325,829	Boswau	Aug. 3, 1943
2,327,429	Hull	Aug. 24, 1943