Dec. 30, 1930. J. E. KALGREN 1,787,076

RIVETED STRUCTURE

Original Filed March 12, 1927

Fig. 2

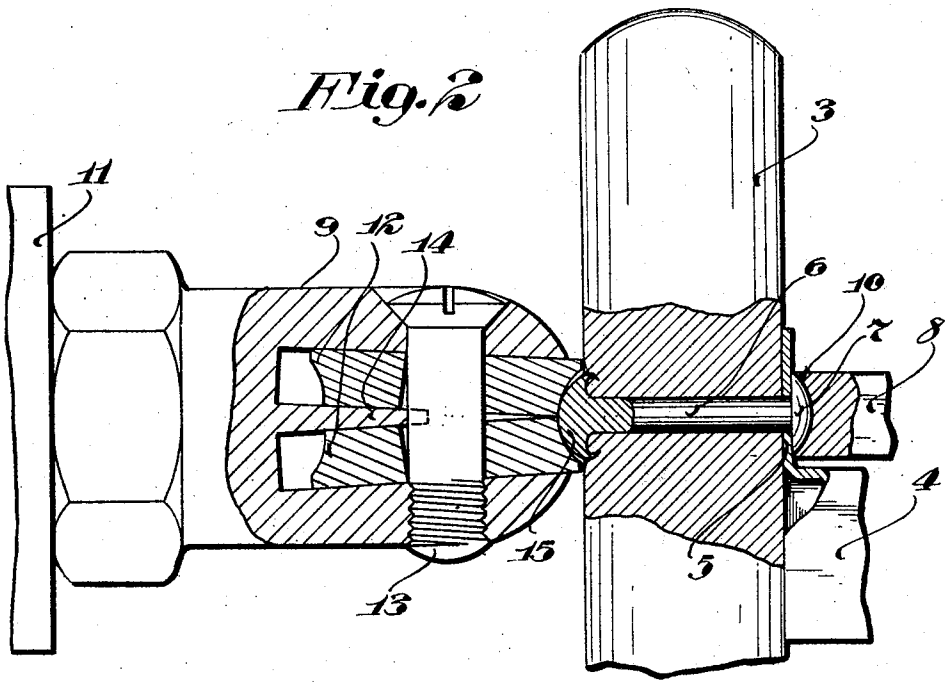

Fig. 1

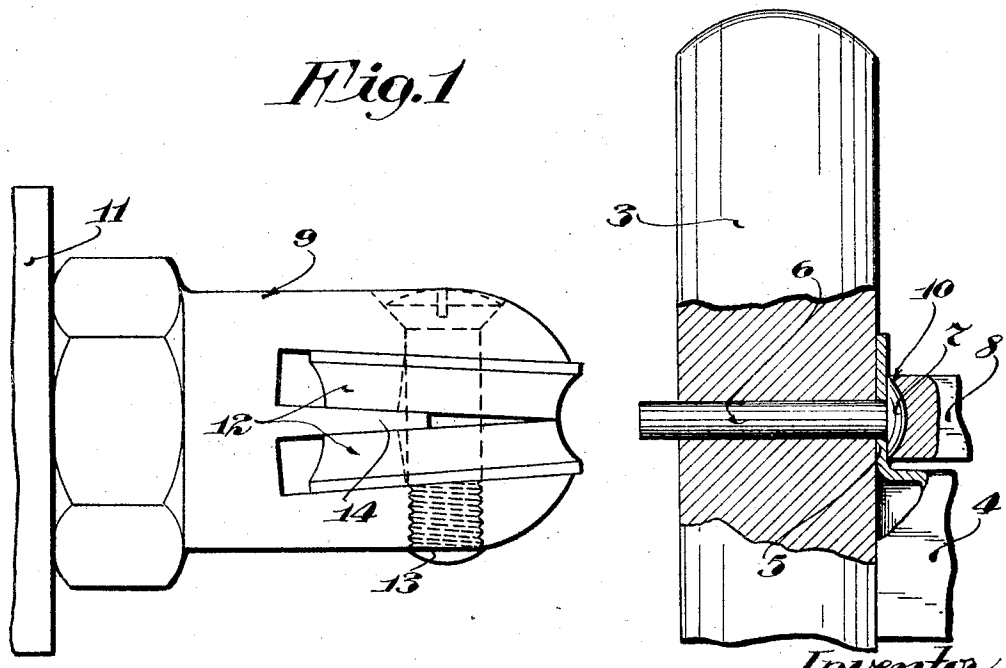

Inventor
John E. Kalgren
By his Attorneys
Merchant & Kilgore

Patented Dec. 30, 1930 1,787,076

UNITED STATES PATENT OFFICE

JOHN E. KALGREN, OF MINNEAPOLIS, MINNESOTA, ASSIGNOR TO J. R. CLARK COMPANY, OF MINNEAPOLIS, MINNESOTA, A CORPORATION OF MINNESOTA

RIVETED STRUCTURE

Original application filed March 12, 1927, Serial No. 174,995. Divided and this application filed January 28, 1930. Serial No. 424,028.

My present invention relates to a riveted structure and is a division of my co-pending application entitled "Riveted structure and machine for producing the same," filed March 12, 1927 under Serial Number 174,995.

Heretofore it has been the general practice in connecting two members of a riveted structure, one of which is made of wood or other compressible material, to insert a rivet through aligned bores in said members, apply a washer thereto and upset the end of the rivet against the washer to form a head thereon. In such a structure in case the wooden member shrinks the rivet will become loose so that said members are not rigidly connected and the wooden member is liable to split through the bore therein for the rivet.

My invention provides an extremely simple and highly efficient method in which the customary washer is dispensed with, of forming a mushroom head on a rivet and clinching the same directly into the wooden member. This mushroom head is formed by setting up a whirling action on the end of the rivet, while held in the wooden member, with sufficient pressure to upset the rivet and simultaneously turn the peripheral edge of the mushroom head thus formed rearwardly and inwardly into the wooden member. During the formation of the mushroom head the wooden member is compressed to such a degree that in case said member shrinks the rivet will not become loose. The clinching of the mushroom head directly into the wooden member prevents said member from splitting through that portion thereof clinched by the mushroom head.

This method of forming a mushroom head directly against a compressible member and clinching the same thereto, not only greatly strengthens the riveted structure but reduces the cost of construction by the saving of material and labor.

To the above end, generally stated, the invention consists of the novel method hereinafter described and defined in the claims.

In the accompanying drawings, which illustrate the invention, like characters indicate like parts throughout the several views.

Referring to the drawings:

Fig. 1 is a fragmentary view of a structure, the members of which are to be riveted in accordance with the invention, and a machine for carrying out the invention; and

Fig. 2 is a view corresponding to Fig. 1 with the exception that said members have been riveted.

The structure fragmentarily illustrated in the drawing is the wooden top step 3 of a step ladder and one of the pressed metal knees 4 thereof having an outturned apertured ear 5 on which said step rests. This knee 4 is rigidly secured to the step 3 by two rivets 6, only one of which is shown. The rivet 6, shown, is passed upward through the apertured ear 5 and through a bore in the step 3 with its head 7 bearing against said ear and with its end portion projecting outward of the step 3.

The end of the rivet 6 is upset against the step 3 by a riveting machine disclosed and broadly claimed in the application heretofore identified. For the purpose of this case it is not thought necessary to illustrate this machine except its abutment 8 and spinner head 9. The abutment 8 is provided with a concave seat 10 for the rivet head 7 which axially aligns the rivet 6 with the spinner head 9.

It may be here stated that the abutment 8 is carried by a carriage mounted for movement toward the spinner head 9 to feed the rivet 6 to said head.

The spinner head 9 is secured to the outer end of a revoluble spindle 11 driven from an electric motor, not shown. Said spinner head 9 is bifurcated and a spinner wheel 12, having a grooved periphery and comprising two axially spaced sections, is loosely journaled on a stud 13 mounted in the prongs of said head. The sections of the spinner wheel 12 are held in rearwardly diverging relation, from their rivet-upsetting position, by the prongs of the spinner head 9 and a wedge-like spacer 14 on said head.

It will be noted that the axial holes in the sections of the spinner head 9 flare inwardly and away from the stud 13 to permit said sections to rotate on the stud 13 with a slight wobble movement to compensate for

their oblique relation to the axis of said stud.

As the rivet 6 is axially fed to the spinner wheel 12 the sections of said wheel engage the end of the rivet 6 at diametrically opposite points, and hence, by their contact therewith are rotated in reverse directions. This contact of the spinner wheel 12 with the end of the rivet 6 and the feeding of the rivet 6 axially thereto forms a mushroom head 15 thereon directly against the step 3. Simultaneously with the formation of the mushroom head 15 the peripheral edge thereof is turned rearward and inward into the step 3 and thus clinching the same directly into the wood thereof.

During the formation of the mushroom head 15 the mushroom head 7 is pressed against the step 3, which is held by the ear 5 and the rivet 6 by the abutment 8, with such force that said step is compressed around the rivet 6 and to such a degree, that in case said step shrinks, it will not loosen said rivet.

What I claim is:

1. A method of forming a mushroom head on a rivet and clinching the same directly into a compressible member while supporting the rivet in said member, which consists in upsetting the end of the rivet by spinning action directly against the member and simultaneously curling the peripheral edge of the head being formed rearwardly and inwardly toward the rivet shank into the compressible material of said member, the curling edge cutting and imbedding itself into such material on an inwardly directed arc.

2. The method of forming a head on a rivet and clinching the same simultaneously into a compressible member while supporting the rivet in said member, which consists in upsetting the end of the rivet by spinning action and curling the peripheral edge rearwardly cutting through the fibres of the compressible material of said member on an inwardly directed arc, whereby to interlock therewith, and to compress such material under the body of the rivet head.

In testimony whereof I affix my signature.

JOHN E. KALGREN.