March 11, 1952 E. J. SVENSON 2,588,430

ROTARY BLADE PUMP

Filed Oct. 15, 1945 4 Sheets-Sheet 1

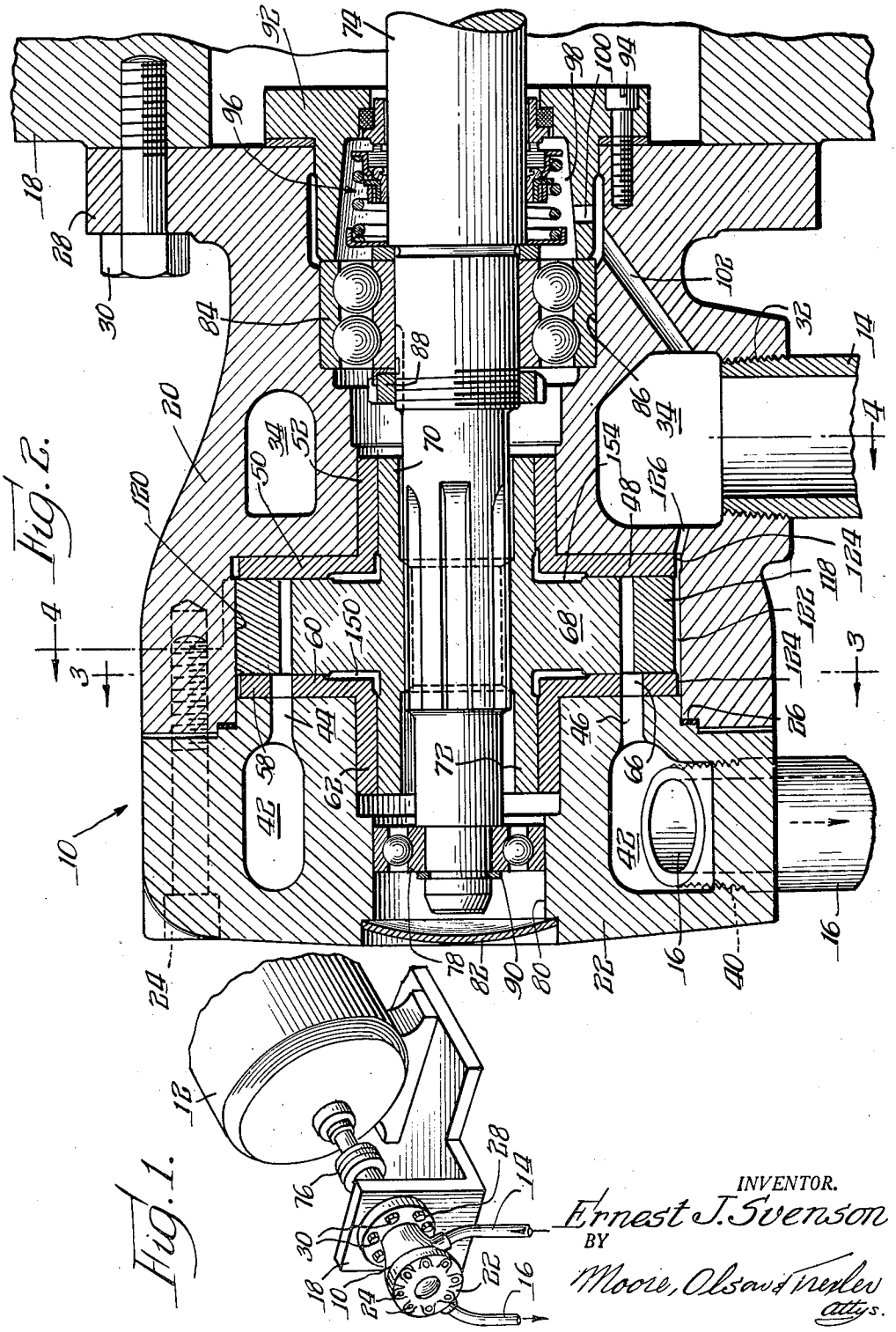

Fig. 2.

Fig. 1.

INVENTOR.
Ernest J. Svenson
BY
Moore, Olson & Trexler
Attys.

March 11, 1952 E. J. SVENSON 2,588,430

ROTARY BLADE PUMP

Filed Oct. 15, 1945 4 Sheets-Sheet 2

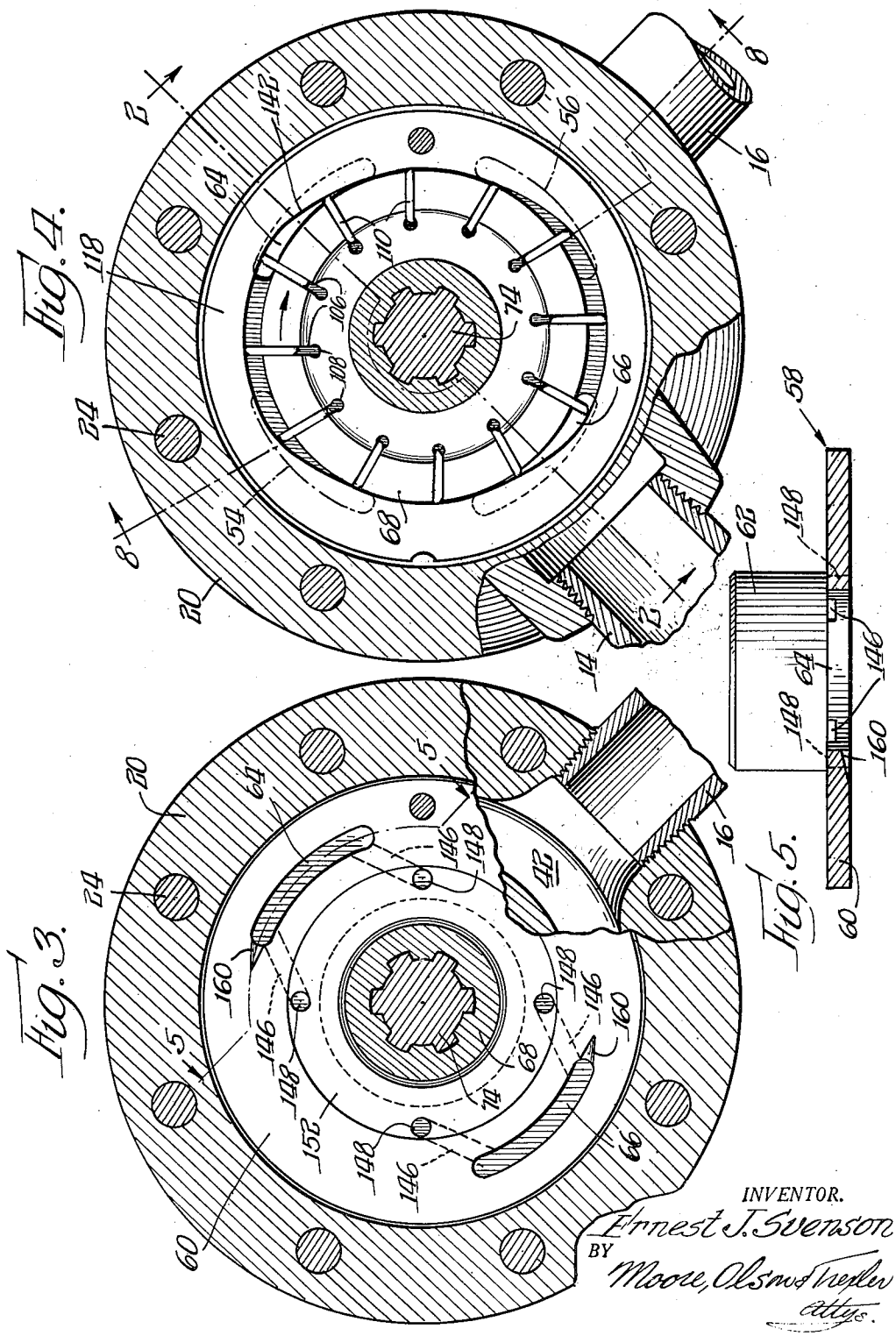

March 11, 1952 E. J. SVENSON 2,588,430

ROTARY BLADE PUMP

Filed Oct. 15, 1945 4 Sheets-Sheet 3

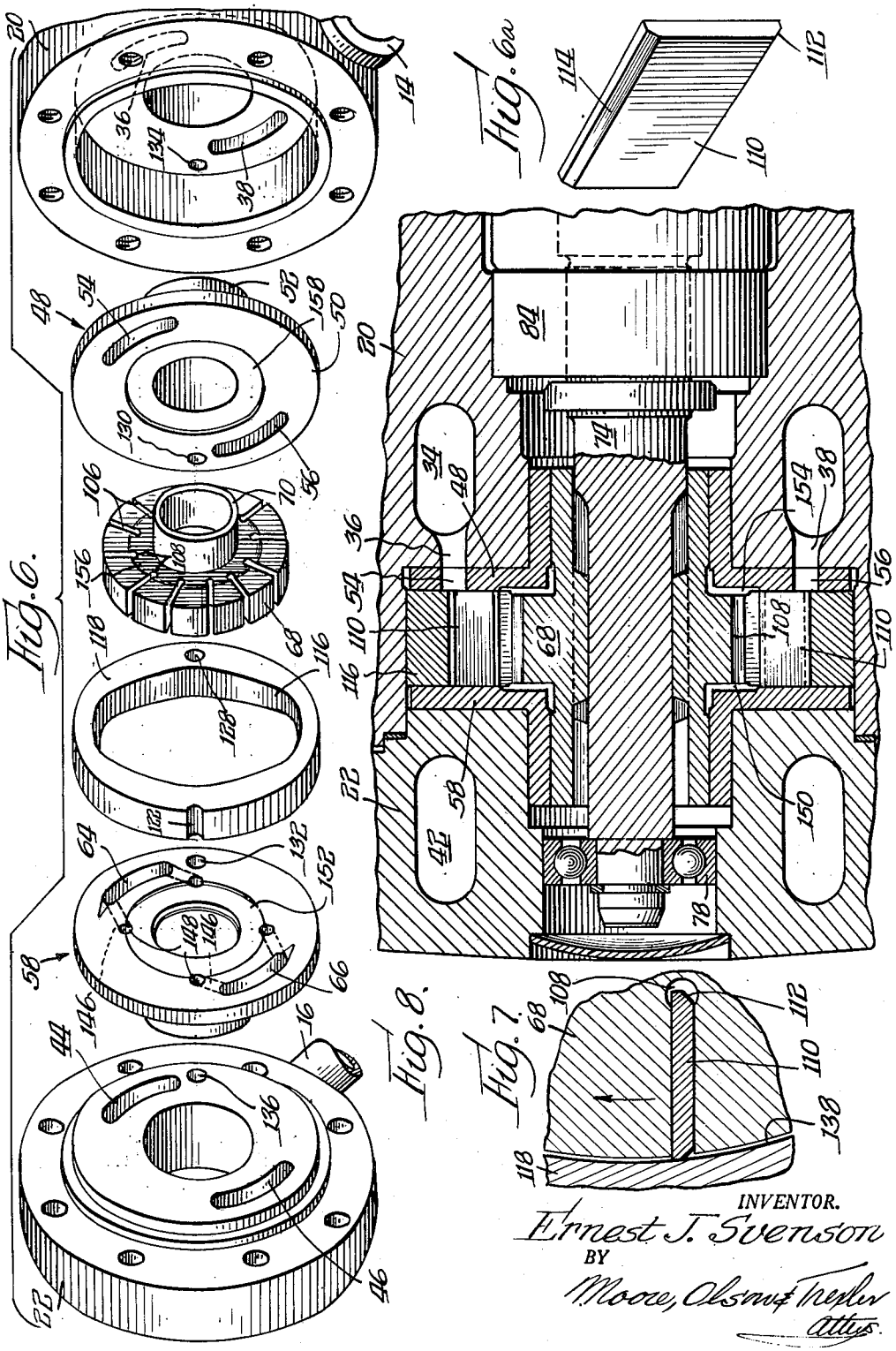


INVENTOR.
Ernest J. Svenson
BY
Moore, Olsen & Trefler
Attys.

ROTARY BLADE PUMP

Filed Oct. 15, 1945 4 Sheets-Sheet 4

Fig. 9.

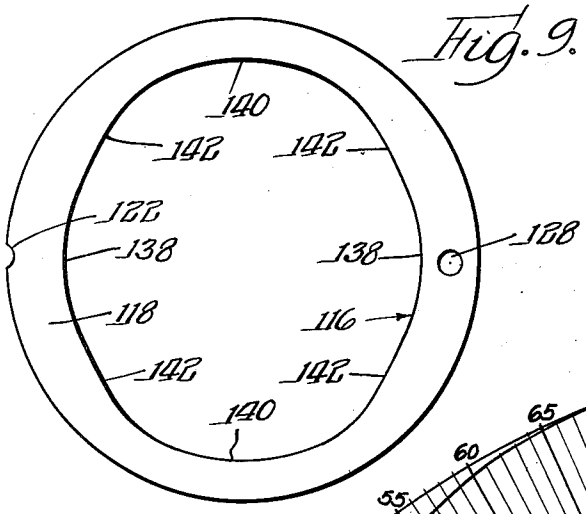


Fig. 10.

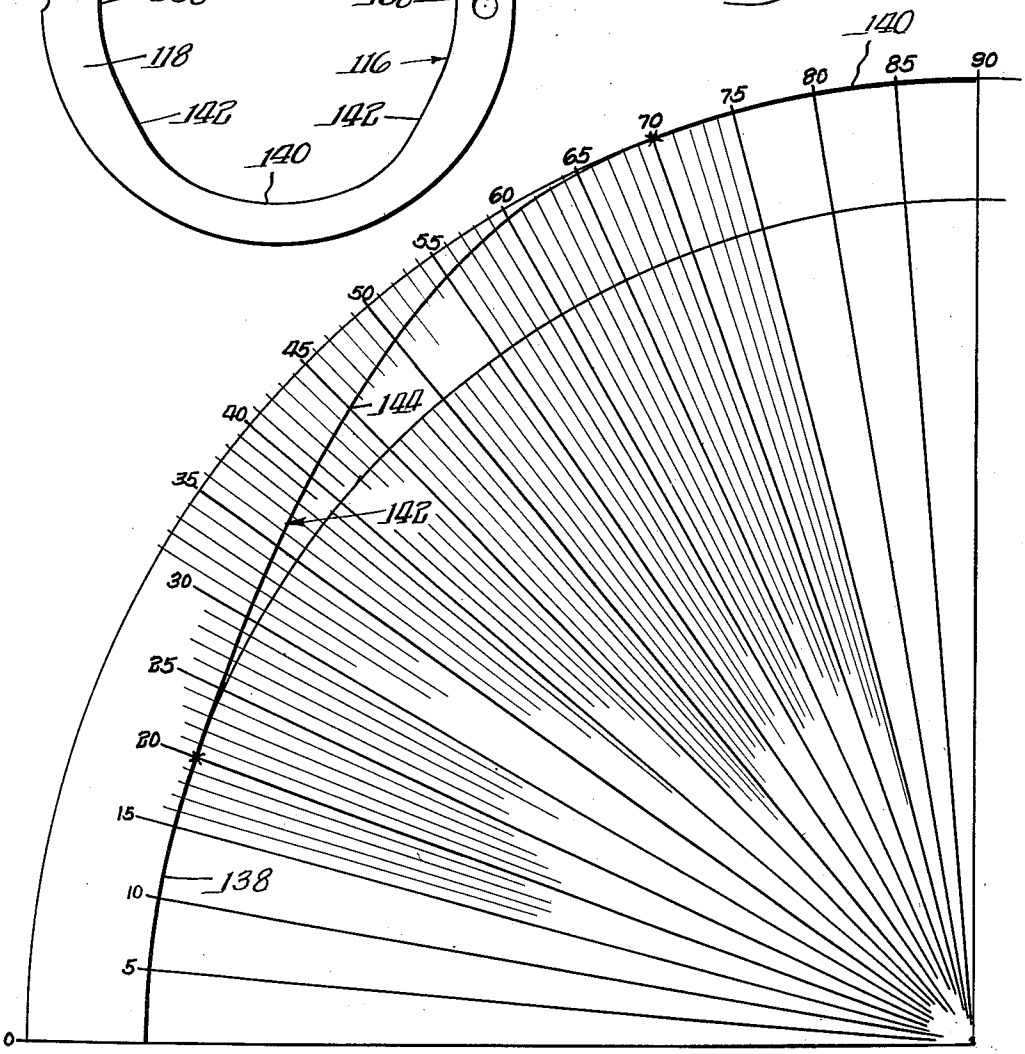


INVENTOR.
Ernest J. Svenson
BY
Moore, Olson & Treyler
attys.

Patented Mar. 11, 1952 2,588,430

# UNITED STATES PATENT OFFICE

2,588,430

## ROTARY BLADE PUMP

Ernest J. Svenson, Rockford, Ill., assignor to Odin Corporation, Chicago, Ill., a corporation of Illinois

Application October 15, 1945, Serial No. 622,397

4 Claims. (Cl. 103—135)

1

This invention relates to pumping mechanisms, and particularly to pumps of the rotary blade type.

Pumps of the rotary blade type have the advantage, when compared with plunger pumps, of providing a non-pulsating fluid delivery. Also, blade pumps generally provide a greater volumetric delivery for a given size and cost pumping installation. However, while blade pumps may be relied upon to provide a pumping pressure equal to or greater than gear pumps, in conventional blade pumps difficulty is encountered in attempting to provide fluid delivery at relatively high pumping pressures. Among the difficulties encountered are loss of mechanical and volumetric efficiency, undue wear, and jamming and freezing of the relatively moving parts.

It is an object of the present invention to provide a rotary blade pump of improved construction and improved operating characteristics.

More specifically stated, it is an object of the present invention to provide a rotary blade pump which may be employed to deliver higher pumping pressures, with maintained mechanical and volumetric efficiency, and with a minimum of wear, and without jamming or freezing of the parts.

Still more specifically stated, one of the objects of the present invention is to provide a rotary blade pump having an improved arrangement of parts so as to maintain the stationary and rotary cooperating elements in balance, even when subjected to relatively high pumping pressures, whereby to eliminate distortion of the cooperating parts and maintain mechanical and volumetric efficiency, and minimize wear, as above set forth.

Further objects of the invention are to provide a pump structure of the rotary blade type having an improved port and blade cooperation, an improved rotor and drive shaft arrangement, an improved cam structure, and an improved and balanced housing construction.

Various other objects, advantages and features of the invention will be apparent from the following specification when taken in connection with the accompanying drawings wherein a preferred embodiment is set forth for purposes of illustration.

In the drawings, wherein like reference numerals refer to like parts throughout:

Fig. 1 is a general assembly view of a pumping structure constructed in accordance with and embodying the principles of the invention, in association with its driving motor;

2

Fig. 2 is a longitudinal sectional view of the pump structure of Fig. 1, on an enlarged scale and taken as indicated by the line 2—2 of Fig. 4;

Fig. 3 is a transverse sectional view of the pump, on the line 3—3 of Fig. 2;

Fig. 4 is a transverse sectional view of the pump on the line 4—4 of Fig. 2;

Fig. 5 is a detail view of the exhaust side plate, partly in section, and taken as indicated by the line 5—5 of Fig. 3;

Fig. 6 is an exploded perspective view of a number of the pump parts;

Fig. 6A is a detail enlarged perspective view of one of the blades;

Fig. 7 is a partial and enlarged detail view showing the blade and cam cooperation;

Fig. 8 is a partial longitudinal sectional view of the pump, taken as indicated by the broken line 8—8 of Fig. 4;

Fig. 9 is a detail view of the cam; and

Fig. 10 is an illustrative view showing the development of the cam surface.

The pump structure of the present invention may be utilized as a pump of general utility, in various types of installations, and has particular applicability to installations requiring non-pulsating delivery of fluid, such for example as oil or the like, at high pressure and relatively large volume.

Referring more particularly to the drawings, in Fig. 1 an installation is illustrated comprising a rotary blade pump 10, and its driving motor 12. The pump is adapted for suitable connection with an inlet supply pipe 14 leading from a source of fluid supply such as oil or the like, and with an outlet pipe 16 adapted for connection with the machine or mechanism to be actuated, or other pressure connection. The pump may be conveniently supported by means of a frame bracket 18 forming a part of a suitable frame structure.

It will be noted that the pump body is relatively small in respect to the size of the driving motor 12, the high operating pressures of the pump requiring a driving motor of relatively larger power.

Referring to Fig. 2, it will be seen that the pump comprises a main body or housing 20 and an auxiliary housing or body 22 secured together by a series of annularly disposed studs or screws as indicated at 24. The juncture between the housings is sealed by an annular gasket, as indicated at 26, compressed between the housings by the studs 24, whereby to provide a fluid-tight connection. The main housing or body is provided

with an annular flange 28 adapted to receive a series of studs or bolts 30 for securing the pump to the support plate 18 or other member to which the pump is to be connected.

The inlet pipe 14 connects with a threaded opening 32 within the main pump housing, this opening in turn communicating with an annular port or channel 34 extending circumferentially within the main pump body. As best shown in Figs. 6 and 8, the annular channel 34 has communicating therewith two diametrically disposed inlet ports 36 and 38, of generally arcuate cross section, and adapted for cooperation with the side plate and rotor structures, later to be described. Similarly the auxiliary housing body 22 is provided with a threaded opening 40 adapted for connection with the exhaust pipe 16, and communicating with an annular channel or passage 42 extending circumferentially of the auxiliary housing body. As shown in Figs. 2 and 6, the annular exhaust passage 42 communicates with a pair of diametrically disposed exhaust ports 44 and 46 of arcuate shaping similar to the shaping of the inlet ports 36 and 38 of the main pump body. The exhaust ports 44 and 46 are displaced 90° in respect to the positioning of the inlet ports 36 and 38, as will be later described.

Press-fitted into the main housing body is an inlet side plate 48 having a radially extending flange portion 50 and an axially extending bushing or bearing portion 52. The flange portion 50 is provided with a pair of inlet ports 54 and 56 co-mating with the inlet ports 36 and 38 of the main housing body.

Similarly there is provided an exhaust side plate 58 press-fitted into the auxiliary pump body 22 having a radially extending flange portion 60 and an axially extending bearing portion 62; the radially extending flange portion being provided with a pair of arcuate exhaust ports 64 and 66 co-mating with the exhaust ports 44 and 46 of the auxiliary pump body. In addition to the principal inlet and exhaust ports, the side plates 48 and 58 are provided with certain additional ports and passages, as will be later described.

A rotor 68 is rotatable between the side plates, the rotor having a pair of oppositely extending cylindrical extensions 70 and 72 adapted for bearing engagement with the bushing portions 52 and 62, respectively, of the side plates.

The rotor is adapted to be rotatably driven by a main drive shaft 74 connected to the driving motor 12 by a suitable coupling connection 76. The rotor is spline-connected to the drive shaft 74, as best shown in Figs. 2, 3 and 4, the splined aperture of the rotor being sufficiently larger than the shaft splined portion so that the rotor is loosely coupled with the drive shaft. In other words, the drive shaft serves merely as a means for imparting rotation to the rotor, the path of travel and bearing support for the rotor being determined by the bearing engagement between the rotor extensions 70 and 72 and the associated bushing portions 52 and 62 of the side plates. By this means vibration or slight irregularities in the alignment of the drive shaft 74 are not transmitted to the rotor.

The outer end of the drive shaft 74 is journaled within a ball bearing structure 78, Fig. 2, the outer race of which is press-fitted into the central bore 80 of the auxiliary housing body. A welch plug or the like 82 provides a fluid-tight seal for the end of the bore 80. The opposite end



portion of the shaft 74 is journaled within a ball bearing structure 84, the outer race of which is press-fitted into a bore 86 formed centrally within the main housing body 20. As will be understood, suitable means such as a threaded nut 88 and split ring 90 may be employed for holding the drive shaft and the associated bearings from axial displacement. The means for retaining the bearing 84 in position includes an end cap 92 bolted to the flange 28 of the main housing body by suitable means such as screws or studs 94. A rotary sealing mechanism 96, the details of which form no part of the present invention, provides a liquid-tight seal for the inner end of the shaft 74, for preventing fluid from gravitating along the drive shaft surface through the central bore of the end cap 92. The sealing mechanism is held from axial displacement between the bearing 84 and the end cap, and may be of any suitable approved design and construction. The central chamber 98 of the end cap communicates with a drain passage 100 in the cap and a drain passage 102 in the main housing body, the latter drain passage communicating with the main inlet channel 34, as shown. These drain connections receive the seepage oil from the side plate bearings, as will be presently described.

As shown in Figs. 4 and 6, the rotor 68 is provided with a plurality of generally radially disposed slots 106 spaced uniformly along the rotor periphery. While these slots are generally radially arranged, it will be noted that they are offset slightly from true radial positioning, as best shown in Fig. 4. The slots are somewhat enlarged at their base portions as indicated at 108, to provide a fissure-resisting slot end, and also to facilitate transmission of fluid across the rotor at the base of the slots, as will presently appear. The slots are arranged to receive a series of blades 110, one of which is shown in perspective detail in Fig. 6A. As shown in Fig. 6A, the blade is generally rectangular in shape except that it is preferably provided on its trailing side with a pair of bevelled corner portions as indicated at 112 and 114. These bevelled portions facilitate the movements of the blades within the rotor slots, and also reduce the area of contact between the blades and their operating cam now to be described.

The blades are adapted for sliding contact with the inner cam surface 116 of a cam member 118 press-fitted into the enlarged end bore 120 of the main housing body. The cam member is preferably provided at one point along its periphery with a notch or groove 122, Figs. 2 and 6, communicating with annular chambers 124 at the peripheries of the side plates, and a drain line 126 in the housing body, to provide oil drainage from the side plate peripheries, if required.

The cam member 118 is also provided with a transverse opening or hole 128, Fig. 6, adapted to align with similar holes 130 and 132 in the side plates and with holes 134 and 136 in the housing bodies so that a locating pin may be projected through the cam, side plate, and housing assembly so as to align and hold these parts in proper position relative to each other,

The cam track 116 of the cam member is provided, as best shown in Fig. 9, with a pair of circular surfaces 138 of smaller diameter, a pair of circular surfaces 140 of larger diameter, and cam surfaces 142 for moving the blades 110 inwardly and outwardly as they move along the surface of the cam member. In accordance

with the present invention the cam surfaces 142 are so shaped as to impart simple harmonic motion to the blades for any given constant speed of rotation of the rotor. The development of one of the cam surfaces 142 is shown in enlarged detail in Fig. 10. It will be seen that the smaller circular surface 138 extends for a distance of approximately 20° along the cam quadrant, and that the circular surface 140 similarly extends along each quadrant for a distance of approximately 20° The cam surface 142 extends along the remaining 50° of each quadrant, the development of this surface being such, as stated, as to impart simple harmonic motion to the blades in their movements outwardly and inwardly of the rotor slots 106. By this means a minimum of shock is imparted to the blades in their movements, thus enabling the blades better to follow the contours of the cam member to be controlled thereby. More particularly, in accordance with the principles of simple harmonic motion, the blades have their speeds of movement progressively increased as they leave one circular surface, for example the surface 140, until they reach a maximum speed of movement at the steepest central portion of the cam surface, as indicated at 144, whereupon the speed of movement is then progressively and uniformly decreased until the blade reaches the outer circular surface 138.

To provide lubrication for the rotor, in its movements within the bushing portions 52 and 62 of the side plates, it will be noted that the exhaust side plate is provided on its outer face, remote from the rotor, with four grooves or channels 146, Figs. 3 and 6, communicating between the ends of the ports 64 and 66, and four openings or holes 148, Figs. 3, 5 and 6, drilled through the side plate flange. These holes communicate with an annular channel 150 formed by suitably recessing cooperative annular portions of the side plate and rotor, this recess in the exhaust side plate 58 being shown at 152 in Fig. 6. A similar annular channel 154 is formed by recessing cooperative annular portions of the rotor and the inlet side plate, these recessed portions being indicated at 156 and 158 on the rotor and inlet side plate in Fig. 6. Communication between the annular channels 150 and 154 is provided by the enlarged slot portions 108 of the rotor, whereby said channels 150 and 154 are continuously provided with the fluid being pumped, at exhaust pressure, from the exhaust ports 64 and 66 of the exhaust plate structure. From the annular channels 150 and 154 the oil being pumped, at exhaust pressure, may gravitate slowly between the rotating surfaces of the rotor and the bushings 52 and 62, whereby to lubricate and seal these relatively moving surfaces. Such gravitating or seepage liquid finds its way to the surface of the main drive shaft 74, whereupon it can move to the chamber 98 and drain through the drain passages 100 and 102, previously referred to. The pressure fluid also is forced from the channels 150 and 154 along the side plate flanges between the flanges and the rotor to lubricate the bearing engagement between the side plates and the rotor and blades. The pressure fluid in the passages 108 also insures the proper lubrication of the blades within the rotor slots. The pressure fluid within the rotor passages 108 also aids in maintaining the blades radially outwardly in engagement with the surface of the cam member.

In operation, as the rotor 68 is rotatably driven through its splined connection with the drive



shaft 74, in the direction indicated by the arrow in Fig. 4, the oil or other fluid being pumped will be withdrawn from the inlet channel 34, and from the inlet supply pipe 14, and propelled outwardly through the channel 42 and exhaust outlet pipe 16, in proportion to the rotor speed. More particularly, as the rotor is driven, the blades 110 carried thereby are maintained in contact with the track surface 116 of the cam member 118, by the action of centrifugal force supplemented by the fluid pressure within the rotor passages 108, whereby to conduct and propel the fluid from the inlet ports 54 and 56 of the inlet side plate 48 to the outlet ports 64 and 66, respectively, of the outlet side plate 58. The positioning of the inlet ports 54 and 56 is indicated in Fig. 4 by dot and dash lines. It will be seen that the blades experience two radial reciprocations within the rotor slots 106 for each revolution of the rotor, the blades moving radially outwardly as they pass the inlet ports upon enlargement of the pumping chamber to withdraw the fluid from the ports, and moving radially inwardly as they pass the outlet ports and as the pumping chamber is reduced to exhaust the fluid from the pumping chamber and outwardly through the exhaust ports and connections. As will be understood, Fig. 7, the rotor is sufficiently smaller than the smaller diameter of the cam member to permit its free rotation.

As hereinafter pointed out, the pump of the present invention is adapted particularly for the improved high pressure pumping of fluids, with high mechanical and volumetric efficiency, and with minimized wear. These results are secured by providing proper and insured contact between the blades and the cam, and by providing very small clearance (on the order of a few ten thousandths of an inch) between the rotor and the side plates, between the blades and the side plates, and between the blades and the rotor slots; and by maintaining such contact and clearances uniformly at all speeds of operation and at both high and low pumping pressures. The shaping of the cam surface 116 of the cam member 118, which imparts simple harmonic motion to the blades, the reduced area of contact between the blades and the cam provided by the blade bevels, and the fact that the blades and cam are precluded from twisting or distortion, even when subjected to high pumping pressures, combine to insure and maintain proper and vibrationless fluid-tight contact between the blades and the cam surface, to promote mechanical and volumetric efficiency and preclude wear. Similarly the maintenance of the blades, the rotor, and the side plates in proper position and against distortion during high pressure pumping permits the use of initial small clearances between the parts, as stated, to promote and maintain volumetric efficiency and preclude wear or friction drag.

In this connection it is to be noted that the inlet and outlet channels 34 and 42 are both annular, and are symmetrically disposed within the main and auxiliary housings coaxially with the rotor. By this means the relatively high pumping pressures produced in the outlet channel 42 do not tend to distort the auxiliary housing, in its relation to the main housing, but merely applies a uniform stress circumferentially of the auxiliary housing, and to the studs 24, whereby to preserve and maintain a uniform compression of the gasket 26 between the housings and a uniform spacing between the flanges 50 and 60 of the side plates. By thus maintaining the bal-

ance and positioning of the side plates and the cam, and by causing the rotor to be at all times guided in its movements by the side plate bushings, cocking or distortion between the rotor and the side plates, or between the blades and the rotor, side plates or cam, is precluded.

The channels **150** and **154** between the rotor and the side plates are similarly annularly disposed coaxially of the rotor, so as to preclude the setting up of twisting or distortional forces.

It is to be noted that the principal housing functions are effected by the main housing **20** which houses and supports the cam member, and also forms the principal housing and support for the rotor and the drive shaft. The auxiliary housing **22** is in effect an auxiliary drive shaft and rotor support member, secured to and supported by the main housing in such a manner that the fluid pressures produced therein do not distort or twist the main housing member, the auxiliary housing member, or the relationship therebetween.

The free splined connection between the drive shaft **74** and the rotor permits the rotor movements to be accurately guided by the side plates and the bushing parts **52** and **62** of the side plates, any possible misalignment of the drive shaft or vibration thereof, due to high speed operation (for example 1200 to 3600 R. P. M.), not being transmitted to the rotor. The possibility of any such misalignment, however, is minimized by reason of the double bearing support for the shaft and the fact that the surfaces in the main and auxiliary housings for receiving the side plate bushings and for receiving the bearing **84** and the bearing **78** are all concentrically disposed and may be simultaneously machined with the main and auxiliary housings in assembled relation.

The inlet and outlet ports cooperating with the rotor blades are provided in 90° spaced relation in separate side plates, the inlet ports being provided in the inlet side plate **48**, and the outlet ports being provided in the outlet side plate **58**, as previously described. This porting arrangement provides a maximum surface contact area and barrier surface for the blades between the ports, reducing wear which in turn minimizes the possibility of leakage between the ports. Also, it will be seen that the ports are oppositely diametrically disposed in each plate, and that the inlet ports **36** and **38** and the outlet ports **44** and **46** are similarly diametrically oppositely disposed within the main and auxiliary housings, further insuring the production of symmetrical or balanced forces upon the parts in operation, to preclude twisting and distortion. Likewise, there is provided inwardly of the inlet and exhaust ports an annular sealing portion excluding inlet pressure from the base of the rotor.

As has been previously pointed out, the simple harmonic motion imparted to the blades by the cam surface **116** insures vibrationless maintained contact between the blades and the cam with resultant pumping efficiency, as well as a minimum of shock and wear to the parts in operation. Moreover, referring particularly to Fig. 4, it will be seen that the cam surfaces **142** are substantially commensurate in length with the inlet and outlet ports of the side plates, so that the blades will undergo their reciprocative movements while aligned with the ports, and will be maintained in a substantially stationary position within the rotor slots as they enter and leave their alignment with the port ends; thus minimizing shock and



facilitating the cooperative engagement of the parts without the possibility that the blades will dig into the walls of the side plate flanges at the ends of the ports. To further minimize shock and facilitate noiseless and vibrationless operation, it will be seen that the approach ends of the side plate outlet ports **64** and **66** are provided with notches **160** of gradually decreasing depth, whereby to provide feathered port ends for establishing gradual pressure communication between the pumping chambers and the outlet ports as the blades engage the ports.

By reason of the nature of the structure provided, the blade pump of the present invention may be satisfactorily employed for pumping liquid such as oil at relatively high pumping pressures, for example 2000 pounds per square inch, more than twice as great as the pressures employed in connection with conventional blade pumps.

It is obvious that various changes may be made in the specific embodiment set forth without departing from the spirit of the invention. The invention is accordingly not to be limited to the precise embodiment shown and described, but only as indicated in the following claims.

The invention is hereby claimed as follows:

1. A rotary high pressure blade pump comprising a housing, composed of a pair of complementary housing parts, a rotor drive shaft, a rotor including oppositely projecting cylindrical portions embracing the drive shaft and an intermediate flange portion disposed between said housing parts and in which blade slots are provided, blades reciprocable in said slots and operable to propel fluid, each of said housing parts having an annular channel around and spaced from the drive shaft and forming, respectively, inlet and exhaust passages for fluid, a single pair of diametrically opposed inlet ports in one of said housing parts communicating with the inlet passage therein and arranged to transmit the full flow of inlet fluid to the rotor, a single pair of diametrically opposed exhaust ports in the other housing part communicating with the exhaust passage therein to transmit the full flow of exhaust fluid from the rotor, means providing a pair of side plates disposed in said housing on opposite sides of said rotor, each of said side plates including a central cylindrical hub portion projecting therefrom to embrace a cylindrical portion of the rotor and a flange portion disposed between the adjacent side of the rotor flange and the adjacent housing part, the flange portions of said side plates including inlet and exhaust ports registering, respectively, with the adjacent inlet and exhaust ports in said housing parts, each port of each pair of inlet and exhaust ports being disposed in the vicinity of the outer periphery of the rotor and the blades carried thereby and of limited circumferential extent to provide between adjacent ends of the ports of each pair a continuous planar barrier surface of greater circumferential extent than the extent of said ports, said barrier surface being in planar contact with the rotor between the said ports and including a continuous annular sealing portion disposed inwardly of said ports in contact with the rotor and of such radial extent as to exclude inlet fluid pressure from the inner ends of the blade slots and from the vicinity of the cylindrical portions of the rotor and resisting leakage of fluid tracked by adjacent edges of the rotor blades, the said inlet ports being disposed in quadrature relative to the exhaust ports with adjacent ends of the

inlet and exhaust ports spaced circumferentially from one another and relative to the spacing of the rotor blades such that at least one rotor blade is always presented between adjacent ends of inlet and exhaust ports, and a cam member defining the rotor chamber and including an opposed pair of substantially circular arcs of substantially the diameter of the rotor and an opposed intermediate pair of substantially circular arcs of greater diametral spacing than the diameter of the rotor, the said arcs being joined tangentially by cam surfaces shaped to impart substantially uniform acceleration and deceleration to the rotor blades upon rotation of the rotor at constant speed and presenting with said arcs a continuous unbroken inner surface for engagement with the rotor blades.

2. A rotary high pressure blade pump as claimed in claim 1, wherein the cam surfaces are shaped to impart simple harmonic motion to the rotor blades upon rotation of the rotor at constant speed.

3. A rotary high pressure blade pump as claimed in claim 1, wherein the cam surfaces each have a length substantially commensurate with the lengths of the inlet and exhaust ports.

4. A rotary high pressure blade pump as claimed in claim 1, wherein there is provided at the base of the rotor and on opposite sides thereof a pair of annular L-shaped lubrication and pressure channels, the radial portions of the channels being disposed between the flange of the rotor and adjacent flange portions of said side plates and in communication with one another through the base of the rotor slots to direct exhaust fluid behind the blades, and the axial portions of the channels being disposed between adjacent hub portions of the side plates and cylindrical portions of the rotor, and wherein passageways are provided between one of said channels and the exhaust ports for the transmission of exhaust fluid to the channels.



ERNEST J. SVENSON.

## REFERENCES CITED

The following references are of record in the file of this patent:


UNITED STATES PATENTS

| Number | Name | Date |
|---|---|---|
| 159,066 | Beekman | Jan. 26, 1875 |
| 715,722 | Womer | Dec. 9, 1902 |
| 959,856 | Hardy | May 31, 1910 |
| 994,392 | Hauer | June 6, 1911 |
| 1,048,453 | Holt | Dec. 24, 1912 |
| 1,805,063 | Wrona | May 12, 1931 |
| 1,913,758 | Hapkins | June 13, 1933 |
| 1,922,951 | Hawley | Aug. 15, 1933 |
| 1,989,900 | Vickers | Feb. 5, 1935 |
| 2,033,218 | Yirava | Mar. 10, 1936 |
| 2,141,170 | Centervall | Dec. 27, 1938 |
| 2,255,785 | Kendrick | Sept. 16, 1941 |
| 2,313,075 | Kendrick et al. | Mar. 9, 1943 |
| 2,335,284 | Kendrick | Nov. 30, 1943 |
| 2,377,556 | Jeannin | June 5, 1945 |
| 2,384,872 | Baker et al. | Sept. 18, 1945 |
| 2,393,223 | Rosen | Jan. 15, 1946 |
| 2,411,606 | Wilson | Nov. 26, 1946 |
| 2,423,507 | Lawton | July 8, 1947 |

FOREIGN PATENTS

| Number | Country | Date |
|---|---|---|
| 153,608 | Great Britain | Mar. 10, 1921 |
| 509,953 | Great Britain | July 25, 1939 |