(No Model.) 3 Sheets—Sheet 1.

J. WEBSTER.

DRYING APPARATUS.

No. 590,287. Patented Sept. 21, 1897.

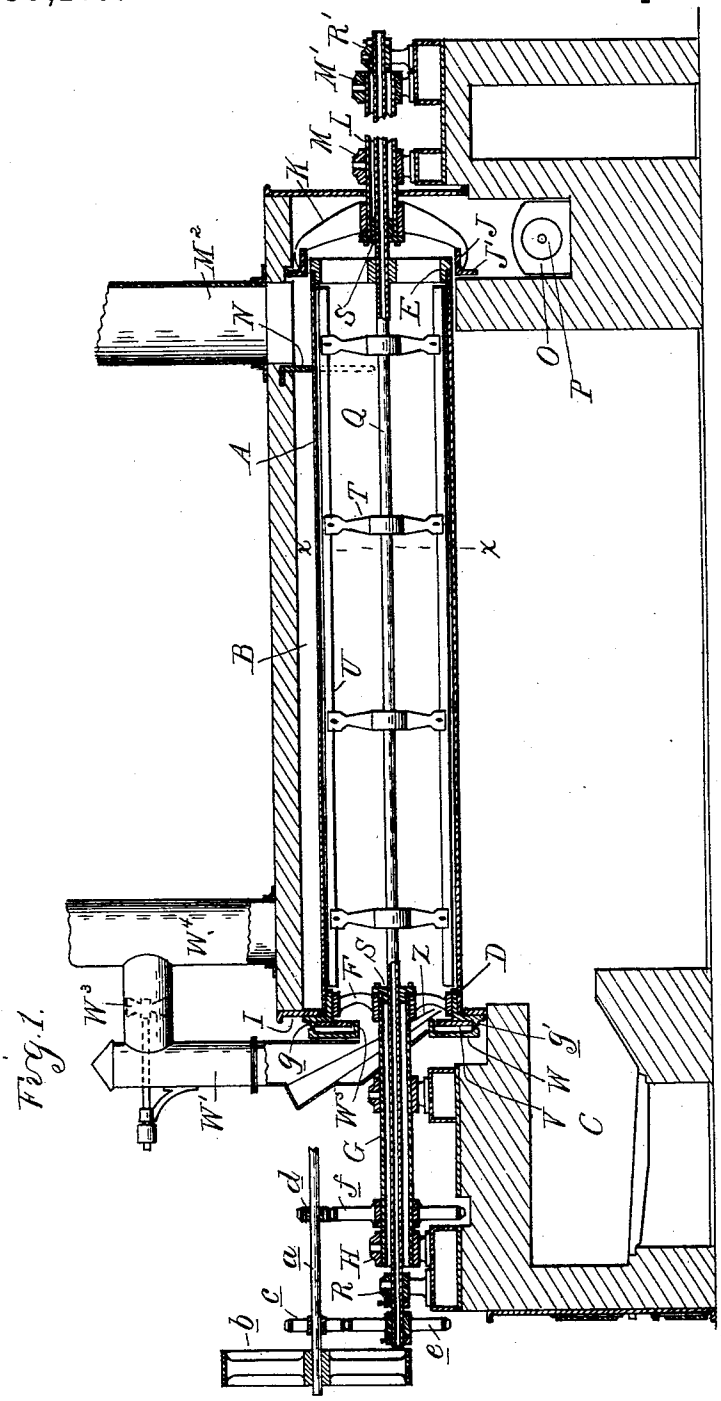

Fig. 1.

Witnesses
Otto F. Barthel
A. L. Habby

Inventor
John Webster
By Mo. C. Spraguer & Son
Attys.

THE NORRIS PETERS CO. PHOTO-LITHO., WASHINGTON, D. C.

(No Model.) 3 Sheets—Sheet 2.

J. WEBSTER.

DRYING APPARATUS.

No. 590,287. Patented Sept. 21, 1897.

Fig. 2.

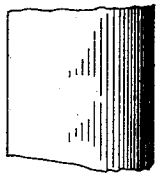

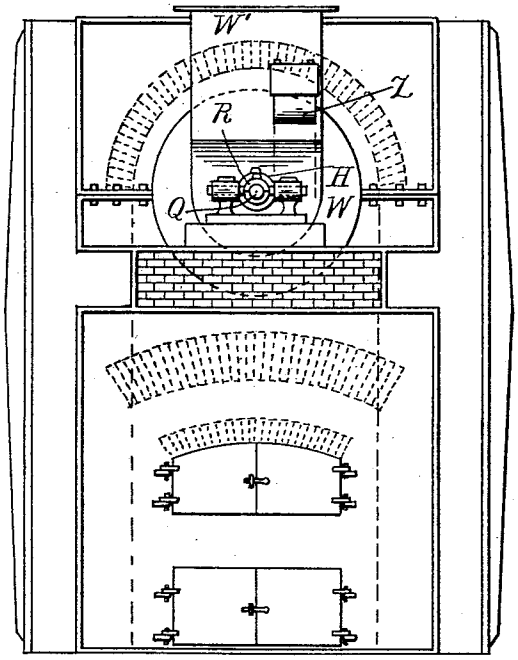

Fig. 3.

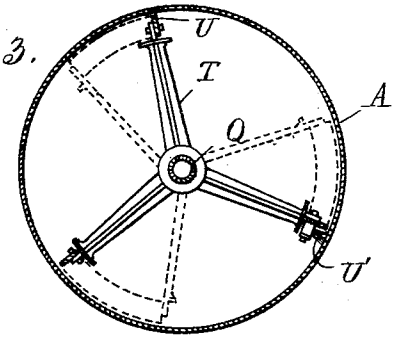

Witnesses:
Otto A. Barthel
A. L. Habby

Inventor
John Webster
By Thos. G. Sprague & Co
Attys.

THE NORRIS PETERS CO., PHOTO-LITHO., WASHINGTON, D. C.

(No Model.) 3 Sheets—Sheet 3.

J. WEBSTER.

DRYING APPARATUS.

No. 590,287. Patented Sept. 21, 1897.

Fig. 4.

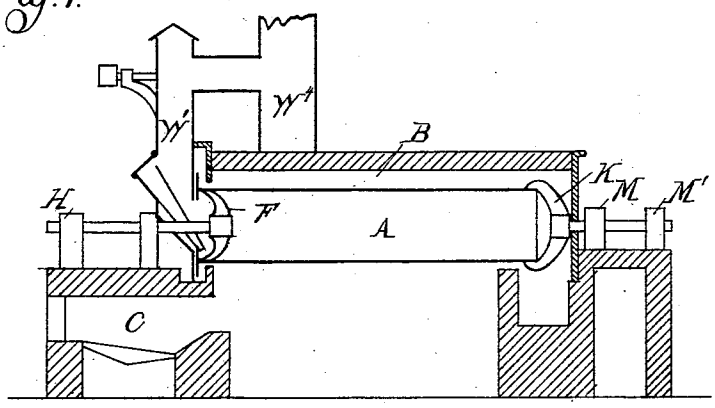

Witnesses:
Otto F. Barthel,
W. B. Dogherty

Inventor:
John Webster,
By Munn & Sprague & Co
Attorneys.

THE NORRIS PETERS CO., PHOTO-LITHO., WASHINGTON, D. C.

UNITED STATES PATENT OFFICE.

JOHN WEBSTER, OF DETROIT, MICHIGAN, ASSIGNOR OF TWO-THIRDS TO THOMAS S. CHRISTIE AND WM. V. MOORE, OF SAME PLACE.

DRYING APPARATUS.

SPECIFICATION forming part of Letters Patent No. 590,287, dated September 21, 1897.

Application filed August 5, 1896. Serial No. 601,727. (No model.)

To all whom it may concern:

Be it known that I, JOHN WEBSTER, a citizen of the United States, residing at Detroit, in the county of Wayne and State of Michigan, have invented certain new and useful Improvements in Drying Apparatus, of which the following is a specification, reference being had therein to the accompanying drawings.

This invention relates to a drying apparatus specifically devised and adapted for drying salts, such as sulfate of soda and similar salts, obtained from solutions and which in drying are liable to agglomerate and stick together or adhere to the surfaces with which they come in contact, and also for drying other products of a gelatinous or sticky nature.

My invention more specifically consists to this end in a peculiarly-constructed drying-cylinder provided with means for readily feeding and discharging the material therefrom and provided with a stirring and lifting device, all as more fully hereinafter described, and shown in the drawings, in which—

Figure 1 is a vertical central longitudinal section of my improved drying apparatus. Fig. 2 is a front elevation thereof, and Fig. 3 is a cross-section through the drying-cylinder on line *x x*, Fig. 1. Fig. 4 is a diagram of a modified construction referred to.

A is an imperforate horizontal drying-cylinder inclosed within a heating-chamber B, wherein it is exposed to the direct heat of the products of combustion from a furnace C, extending out in front below the drying-cylinder. The shell of the cylinder is made of sheet-steel, which is reinforced at the front and rear ends by interior rings D and E. Within the ring D is secured a spider F, in the hub of which is secured the tubular trunnion G, extending out in front of the drying-cylinder and resting in bearings H H, supported upon the top of the furnace C. The ring D projects out through an opening formed in the front plate I, which closes the front end of the heating-chamber around the drying-cylinder, and a suitable joint is made at this point to allow the cylinder to freely revolve without permitting the escape of gases.

The rear end of the drying-cylinder engages slidingly within an outer supporting-ring J, which is attached to the arms of a spider K, in the hub of which is secured a rearwardly-extending hollow trunnion L, supported in bearings M M′, which are supported by a rearward extension of the supporting-walls.

The supporting-ring J has an outwardly-projecting annular flange J′, which, in connection with the inclosing brickwork of the furnace-chamber, prevents the passage of the products of combustion into the rear end of the drying-cylinder, such products being carried away by a suitable exit-flue M^2, placed above the rear end, and a baffle-plate N compels the products to take a more indirect course and produce a better heating effect.

Below the rear end of the drying-cylinder a pit O is built transversely in the brickwork for the reception of the material discharged from the drying-cylinder, and this pit contains a suitable screw conveyer P for carrying the material to a suitable discharge-spout. (Not shown.)

The drying-cylinder is provided either upon its front or rear trunnion with driving-gear, whereby it may be revolved at a prescribed speed, the connection of the cylinder with the spider K being such that while the cylinder is free to expand and contract they move together.

Within the drying-cylinder is arranged a stirring device, which consists of a pipe-shaft Q, extending the whole length through the cylinder and trunnions. At the ends it is supported in end bearings R R′. This shaft is also intermediately supported by means of bushing-boxes S S in the hubs of the spiders. Upon this pipe-shaft are secured at intervals the spiders T, to the outer end of which are secured thin steel blades U, which are in scraping proximity to the inner walls of the shell, and for the purpose of producing a progressive feed of the material the blades may be arranged with a slight spiral twist, as shown in dotted lines, Fig. 3. Either at the front end or at the rear end (according to where the drive-gear of the drum is placed) the shaft of the stirring device is provided with means for revolving it independently of the drying-cylinder, the arrangement being such that the stirrer or lifter turns in the same direction as

the drum, but at a little faster speed. As shown in the drawings, a shaft *a* is supported above the front trunnion, which is driven by a pulley *b* and conveys motion by means of gear-wheels *c* and *d* upon the drive-shaft to the gear-wheels *e* and *f*, placed, respectively, upon the shaft of the stirrer and the front trunnion of the drying-drum.

The front end of the cylinder abuts against a stationary breech-plate W, and suitable annular flanges *g g'* are formed on this plate and on the ring D to form a rolling joint. The breech-plate is provided with an annular opening, and through this opening the drying-cylinder communicates through an exhaust-trunk W', containing an exhaust-fan W^3, into the exhaust-stack W^4, all so arranged as to produce by suction a draft to carry away the vapors from the drying-cylinder and create a constant current of fresh air through it.

The feed is effected into the front end of the drying-cylinder, and to this end its front end is partly closed by an apertured plate V, secured into the ring D, and the breech-plate has a corresponding opening surrounded by a flange W^5, projecting into the opening in the head V, and through this opening a feed-hopper Z projects with its lower end into the drying-cylinder. The feed-hopper passes at a suitable incline through the lower end of the exhaust-trunk to one side of the trunnion-shaft into the cylinder. This is accomplished by curving the arms of the spider inwardly, so that the hopper can be extended far enough to spout the material beyond the ring and arms F of the spider into the path of the stirring and lifting wings, and in this manner the difficulty of preventing material of the character for which the drier is specially designed from clogging and choking the front end is entirely overcome. A similar provision is made for the free discharge of the material by curving the arms of the end spider outwardly, so as to withdraw it beyond the end of the drying-cylinder.

The operation of the drying-cylinder will be readily understood without further description. As shown in the drawings, it will be seen that the furnace-gases are not admitted into the drying-cylinder, but pass off into the chimney M^2. In cases, however, in which it is permissible I admit the products of combustion into the rear end of the drying-cylinder and allow them to pass through it and into the exhaust-stack. It is also obvious that my drying apparatus is operative and complete for itself without the stirring device. In the latter I make the blades radially adjustable, so that they can be adjusted from or toward the shell, and if found necessary I also provide one or more with a steel brush V', bolted to the blades.

The construction of my device has several advantages beyond what has been already explained. In the first instance, for obvious reasons it is necessary to have the interior of the shell perfectly unobstructed, and this makes it difficult to make the cylinder stiff enough to prevent it from sagging, which ordinarily would produce a great amount of friction in its bearings. This I avoid by reason of the long hollow trunnions, for which I provide two bearings for each some distance apart, each bearing being supported on trunnions, so as to adjust themselves to the shaft. This construction, with the additional use of bush-boxes in the spider-hubs, permits the stirring device to run perfectly true with the cylinder, and the blades which it carries may be set up very close to it, so as to act as scraper-blades and lifters to prevent the adhesion of the material. It also enables me to use a slip-joint connection between the rear end of the cylinder and its supporting-spider, so that the cylinder can freely expand and contract.

What I claim as my invention is—

1. In a drying apparatus, the combination of a revolving drying-cylinder mounted upon extended hollow trunnions journaled in self-adjusting bearings near the inner and outer ends of each trunnion, a stirring and lifting device within the cylinder mounted upon a shaft extending through the cylinder and its trunnions and journaled in self-adjusting boxes at the ends and in bush-boxes in the inner ends of the trunnions, and scraper-blades carried by the stirring device.

2. In a drying apparatus, a revolving drying-cylinder composed of an outer shell, a spider secured in the front end of the shell and provided with an extended hollow trunnion shouldered in self-adjusting bearings at its inner and outer ends, and a spider supporting the rear end of the shell and provided with an extended trunnion journaled in self-adjusting bearings at its inner and outer ends, and a slip-joint connection between said spider and the rear end of the drying-cylinder.

3. In a drying-cylinder, the combination of a revolving drying-cylinder, composed of an outer imperforate shell exposed to outside contact with the heated products of combustion from a furnace, a spider secured in the front end of the shell and provided with inwardly-curved arms and with a trunnion supporting the front end of the cylinder in suitable bearings, a spider supporting the rear end of the shell and provided with outwardly-curved arms and with a trunnion supporting the rear end of the cylinder, an apertured head in the front end of the cylinder, a stationary breech-plate, a feed-spout extending through said breech-plate into the cylinder, and the revolving stirring and lifting device in the cylinder.

In testimony whereof I affix my signature in presence of two witnesses.

JOHN WEBSTER.

Witnesses:
M. B. O'DOGHERTY,
OTTO F. BARTHEL.