June 7, 1927. T. E. CARRIGAN 1,631,621

KNOCKDOWN BED FRAME

Filed May 14, 1923

Fig. 3.

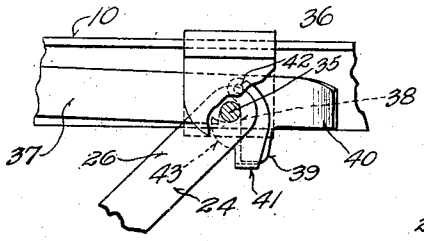

Fig. 5.

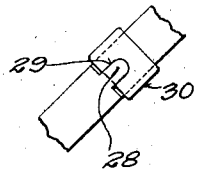

Fig. 4.

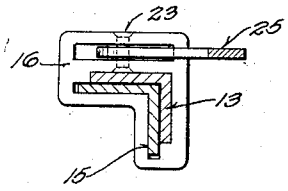

Fig. 6.

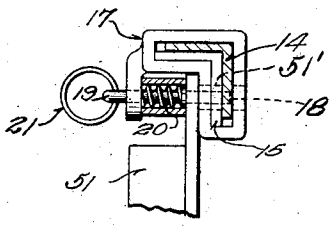

Fig. 7.

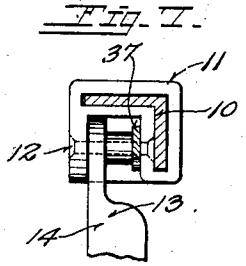

Fig. 1.

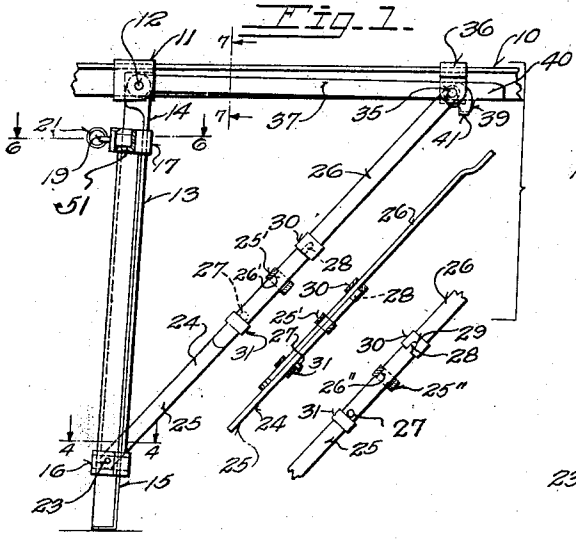

Fig. 2.

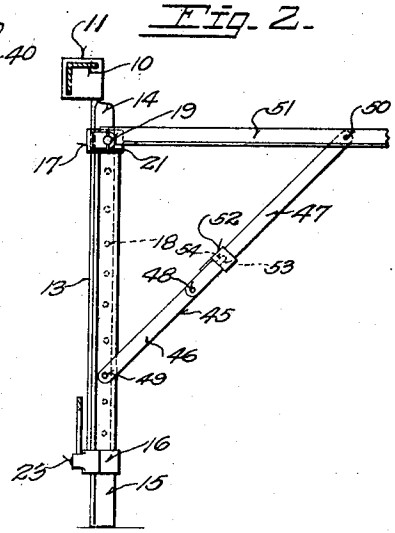

INVENTOR.

Thomas E. Carrigan.

BY

Morsell Keeney & Morsell

ATTORNEY.

Patented June 7, 1927. 1,631,621

UNITED STATES PATENT OFFICE.

THOMAS E. CARRIGAN, OF MILWAUKEE, WISCONSIN.

KNOCKDOWN BED FRAME.

Application filed May 14, 1923. Serial No. 638,862.

This invention relates to knock-down bed frames in general and more particularly to that type of frame disclosed in my co-pending application No. 549,176, filed April 3, 1922, entitled Knock-down bed frames for automobiles which has eventuated in Patent No. 1493104.

The invention has for its principal object to provide an improved means for bracing the supporting legs of such frames.

A further object of the invention is to provide a bracing means of the class described which will be simple in construction, comparatively inexpensive to manufacture and more efficient in use than those which have been heretofore proposed.

With the above and other objects in view, which will appear as the description proceeds, the invention consists in the novel details of construction and combinations of parts more fully hereinafter disclosed and particularly pointed out in the appended claims.

Referring more especially to the accompanying drawings forming a part of this specification, in which like numerals designate like parts in all the views;

Figure 1 is a side elevational view of a portion of a bed frame and a supporting leg therefor, with the bracing means constituting the present invention applied thereto;

Fig. 2 is an elevational view, partly in section, of the parts shown in Figure 1, as seen from the left of the said figure;

Fig. 3 is an enlarged detail elevational view, partly in section, showing the connection between the upper end of the bracing member and the main longitudinal member of the bed frame;

Fig. 4 is a horizontal cross-sectional view, taken approximately on the line 4—4 of Fig. 1, looking down;

Fig. 5 is an enlarged detail elevational view of the locking means employed for securing together the hinged members of the brace;

Fig. 6 is a horizontal cross-sectional view, taken approximately on the plane indicated by the line 6—6 of Fig. 1, looking down; and,

Fig. 7 is a vertical sectional view, taken approximately on the plane indicated by the line 7—7 of Fig. 1, looking in the direction of the arrows.

Referring more particularly to the said drawings, the numeral 10 indicates the longitudinal frame member, which is preferably composed of angle iron and on which is slidably mounted a collar 11. Pivotally attached to the said collar, as by the pin 12, is the supporting leg 13, comprising a pair of telescopically connected members 14 and 15.

The member 14 is provided at its lower end with a rigidly carried collar 16, through which the member 15 is adapted to slide, while the said member 15 is provided at its upper end with a similar rigidly carried collar 17, which is adapted to slide on the member 14. The members 14 and 15 are preferably constructed of angle iron, substantially as shown, and one web of the member 14 is provided with a plurality of spaced holes or apertures 18 which are adapted to be engaged by a pin 19 carried by the collar 17 and controlled by a spring 20, and provided with a ring or other finger member 21, whereby it may be withdrawn from one of the said apertures 18 for adjusting purposes. The spring 20 normally urges the pin 19 into the said apertures, as will be readily understood.

As above stated, the collar 16 is carried by the lower end of the leg member 14, and the said collar has pivotally secured to it, as by the pin 23, the lower end of a bracing member 24. The said brace 24 comprises two members, 25 and 26, which are slidably secured together. The member 25 is provided near its upper end with a rigidly carried collar 25′ through which the member 26 is adapted to slide while the said member 26 is provided at its lower end with a similar rigidly carried collar 31 which is adapted to slide on the member 25. The stop pin 27 carried by the member 25 prevents the members from sliding beyond the desired length in order to hold the supporting member in a perpendicular position at which point the collar 25′ drops into a recess 26′ in the upper edge of the member 26 as shown in Fig. 1. The upper end of the member 25 is provided with a tongue 28, see Fig. 5, which is adapted to be received in a recess 29, formed in a collar member 30, slidably mounted upon the member 26, whereby relative rotary or oscillatory movement between the two members, 25 and 26, may be prevented at desired periods to the end that unintentional disengagement of the collar 25′ from its recess 26′ will be prevented.

The upper end of the member 26 of the

brace 24 is pivotally connected as by a pin 35 to a collar 36, slidably mounted upon the longitudinal frame member 10, see Figs. 1 and 3. The said collar 36, as well as the collar 11, are slidably mounted upon the frame 10 in order to permit the sliding movement of the leg and also of the frame being knocked down in a manner similar to that disclosed in my above mentioned co-pending application, and in order to lock the said collars in spaced position when it is desired to set up the bed frame and to brace the legs thereof by means of the brace members 24, there is provided an arm 37, pivotally secured at one end to the pin 12 of the collar 11, and extending parallel and in close proximity to the vertical web of the angle frame member 10.

The said arm 37 is provided at or near its free end with a recess 38 and with a downwardly depending toe 39, and the extreme end of the said arm may be curved as indicated at 40 to facilitate sliding by the other collars when moved to folded position. A hook or latch 41 is pivoted to the arm 37 as at 42, and is provided with a toe 43, which is adapted to automatically engage beneath the pin 35, as shown in Fig. 3, to prevent the unintentional disengagement of the pin 35 in the recess 38 of the arm 37, by undesired upward movement of the said arm 37.

The parts may thus be locked in extended or operative positions and an extremely rigid frame provided.

When it is desired to collapse the frame, it is only necessary to move the hook or latch 41 to disengage its toe 43 from the pin 35, whereupon the arm 37 may be swung upwardly about its pivot 12 until its under surface clears the top of the pin 35 to permit the sliding of the collar 36 against the collar 11 on the frame member 10, and the slidable contraction of brace members 25 and 26, thereby allowing the supporting members 14 and 15 to fold directly under the frame member 10, as above disclosed.

The collar 30, on the brace member 26, may likewise be slid toward the end of its respective member to unlock the brace, permitting the collar 25′ to disengage its recess 26′, and the members to slidably contract by pivoting around their respective pivots 23 and 35.

It will be understood that there are four of the brace members 24, which preferably brace the legs, such as 13, longitudinally of the frame members 10. In order to brace the said legs transversely, there are provided transverse diagonal bracing members 45, see Fig. 2, each composed of two bars, 46 and 47, having overlapping ends and pivotally secured together as at 48. The free ends of the said bars may be pivotally secured as at 49 and 50 respectively, to the leg 13 and to the horizontal frame member 51, the ends of which are pivotally secured to the members 17 and 15 by sleeves 51′ as shown in Fig. 6.

A collar 52 may be slidably mounted upon the member 47 and provided with a recess 53, similar to the recess 29 above described in connection with the collar 30, which recess is adapted to accommodate a tongue 54, provided on the extreme end of the member 46, as will be readily understood.

The brace member 24 with the supporting member 14 and horizontal frame member 10, comprises the longitudinal brace, while the brace member 45 with the supporting member 15 and the horizontal frame member 51 comprises the transverse brace. Each brace is independent of the other in order to permit the adjustment of the leg by means of the pin 19.

It will thus be seen that this invention provides a simple and effective means for rigidly bracing the foldable legs of a knock-down bed frame, which bracing means may be itself readily folded when it is desired to collapse the frame.

It is obvious that those skilled in the art may vary the details of construction as well as the arrangement of parts without departing from the spirit of the invention, and therefore it is not wished to be limited to the above disclosure except as may be required by the accompanying claims.

What is claimed is:

1. In a bed frame of the class described, a substantially horizontal frame member; a leg pivotally connected to said frame member; a collapsible brace adapted to maintain said leg and frame members at substantially right angles, said brace comprising a pair of bar members having slidably connected overlapping ends, one of which is provided with a recess, the free ends thereof being pivotally connected respectively to said leg and frame members; and means comprising a collar carried by one of said brace members adapted to engage said recess to prevent relative slidable movement thereof.

2. In a bed frame of the class described, a substantially horizontal frame member; a leg; a slidable pivotal connection between said leg and frame member; an angularly disposed brace having its ends pivotally connected respectively to said leg and frame members, said brace comprising a pair of bars slidably connected together with their ends overlapping, said bars having a coacting collar and recess for receiving the same for preventing relative longitudinal movement thereof, one of said ends being provided with a tongue; and a collar slidably carried on said brace, provided with a recess adapted to receive said tongue, for preventing the disengagement of said collar from said recess.

3. In a bed frame of the class described, a

substantially horizontal frame member; a leg pivotally connected to said frame member; a collar slidably mounted on said frame member; a collapsible brace having one of its ends pivotally secured to said leg and its other end pivotally secured to said collar; means for preventing the collapsing of said brace; and means for preventing said collar from sliding on said frame member relative to said leg pivot.

4. In a bed frame of the class described, a substantially horizontal frame member; a leg pivotally connected to said frame member; a collar slidably mounted on said frame member; a collapsible brace having one of its ends pivotally secured to said leg and its other end pivotally secured to said collar; means for preventing the collapsing of said brace; and means comprising a bar carried by said leg pivot for preventing said collar from sliding on said frame member relative to said leg pivot.

5. In a bed frame of the class described, a substantially horizontal frame member; a leg pivotally connected to said frame member, a collar slidably mounted on said frame member; a collapsible brace having one of its ends pivotally secured to said leg and its other end pivotally secured to said collar; means for preventing the collapsing of said brace; and means comprising a bar carried by said leg pivot and provided with a recess adapted to engage the pivot pin carried by said collar, for preventing said collar from sliding on said frame member relative to said leg pivot.

6. In a bed frame of the class described, a substantially horizontal frame member; a leg pivotally connected to said frame member; a collar slidably mounted on said frame member; a collapsible brace having one of its ends pivotally secured to said leg and its other end pivotally secured to said collar; means for preventing the collapsing of said brace; means comprising a bar carried by said leg pivot and provided with a recess adapted to engage the pivot pin carried by said collar, for preventing said collar from sliding on said frame member relative to said leg pivot; and latch means carried by said bar for preventing the disengagement of said recess and said collar pivot pin.

In testimony whereof, I affix my signature.

THOMAS E. CARRIGAN.