Dec. 19, 1967 W. J. THOMPSON 3,358,594

ELECTROSTATIC PRINTING WITH A MAGNETIC BRUSH FEED

Filed Jan. 17, 1966

Fig 1.

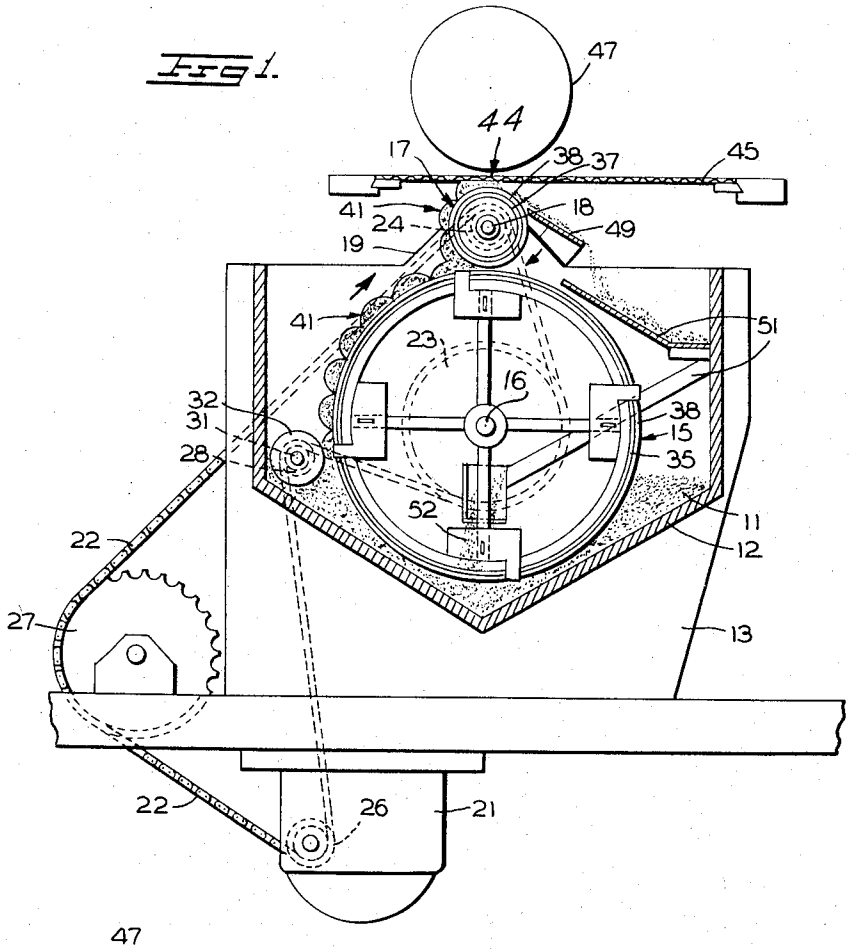

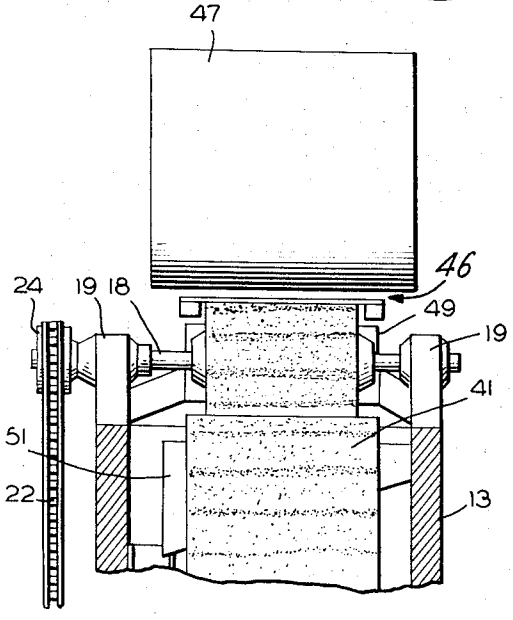

Fig 2.

INVENTOR

WILLIAM JAMES THOMPSON

BY Leonard R. Kohan

ATTORNEY

United States Patent Office 3,358,594 Patented Dec. 19, 1967

3,358,594

ELECTROSTATIC PRINTING WITH A MAGNETIC BRUSH FEED

William James Thompson, Trenton, N.J., assignor to American Can Company, New York, N.Y., a corporation of New Jersey

Filed Jan. 17, 1966, Ser. No. 521,144
8 Claims. (Cl. 101—114)

This invention relates to electrostatic printing and more particularly to a method and means for feeding a mixture of magnetic particles and particles of printing material to and into the electrostatic field which effects transfer of the printing particles to an article to be printed upon.

Representative of the area in the field of electrostatic printing wherein the present invention is applicable are the following U.S. patents: 3,081,698, issued to Clyde O. Childress and Louis J. Kabell; 2,820,746, issued to George F. Keeleric; and 2,152,077, issued to Archibald F. Meston and Harry A. Wintermute. These patents show the utilization of an electrostatic field, established between an article backing element and a particle charging element so that the charged particles are transferred from the charging element through the electrostatic field to the surface of the article to be printed or coated upon. Meston et al shows the use of a stencil screen that moves with and close to the article as the latter moves across the electrostatic field.

The present invention is a novel method and means for mixing particles of printing material with particles of magnetic material, delivering the mixture to a printing or image screen or stencil through which the printing particles pass and are electrostatically propelled to the surface to be printed, and recovering the magnetic particles and any excess of printing particles which did not pass through the screen.

An object of the invention is the provision of a method and means for feeding a mixture of magnetic and printing particles onto an applicator prior to application of the mixture to a printing station.

Another object of the invention is the provision of a roller applicator of relatively small diameter and a conveying roller of larger diameter, both so magnetized as to arrange the particles in a uniform configuration.

Still another object of the invention is the provision of an applicator roller and a conveyor roller so that particles carried by the conveyor roller readily transfer from the conveyor roller to the applicator roller as they approach closely to the latter.

Yet another object of the invention is the provision of multipole magnetization on a roller feed system to provide the roller or rollers with multiple magnetic fields of suitable arrangement and strength to produce a desired layer of particle mixture thereon prior to printing.

Other objects and advantages of the invention will be apparent as it becomes better understood from the following description which, when read in connection with the accompanying drawings, discloses a preferred embodiment of the invention.

Referring to the drawings:

FIG. 1 is a vertical, longitudinal sectional view through apparatus illustrative of the invention; and

FIG. 2 is an elevational view taken along line 2—2 in FIG. 1.

With reference to FIG. 1, a supply of a mixture **11** of powdered iron or other magnetic particles and toner, powdered ink or other printing particles, is housed in a bin **12** formed in a frame **13**. While the ratio of toner to magnetic particles may vary, it is preferred that the mixture be about 5% toner to iron by weight. The toner or printing particles are smaller than the iron particles, for reasons to be explained hereinafter.

A relatively large magnetic conveyor or carrying roller **15** is fixedly mounted on a shaft **16** journaled in suitable bearings formed in the frame **13**. Immediately above roller **15**, and closely spaced therefrom, a magnetic applicator roller **17** is mounted on a shaft **18** journaled in bearings **19** formed on the frame **13**.

Both of the rollers **15, 17** are rotated clockwise (FIG. 1) by a geared power drive **21** acting through a chain belt **22**. The chain belt **22** takes over sprockets **23, 24** which are fixed, respectively, to the shaft **16, 18** and which also take over a drive sprocket **26**, an idler sprocket **27** and a sprocket **28**.

Sprocket **28** is fixed to a shaft **31** suitably mounted for rotation in the frame **13** and carrying thereon a leveling worm or auger **32** spaced a predetermined distance from the conveyor roller **15**. The worm substantially uniformly spreads or distributes the mixture **11** laterally over the surface of the rotating roller **15**.

The rollers **15, 17** may be of steel or other suitable rigid material. Each roller carries a layer of magnetic rubber bonded to its cylindrical surface. The magnetic rubber layer **37** on applicator roller **17** is preferably of greater thickness than rubber layer **35** on the conveyor roller **15** so that the magnetic particles in the mixture **11** will transfer from the relatively weaker magnetic attraction of the rotating conveyor roller **15** to the stronger magnetic attraction of the applicator roller **17** as the particles **11** approach the latter.

Furthermore, the layers **35, 37** have a multipole magnetization on substantially equally spaced centers parallel to their respective roller axes. If desired, the plurality of magnets may be arranged on a bias or a helix fashion in relation to the roller axes. The arrangement of the magnets on the surface of the rollers **15, 17** may, however, be positioned in any appropriate relationship to each other to provide the necessary uniform degree of mixture feed, without departing from the scope of this invention.

For their protection, each of the layers of magnetic material is covered with a suitable coating or layer **38** of non-magnetic plastic material, such as Mylar.

The magnetic particles in the mixture **11** are attracted to the surface of the conveyor roller **15** and arrange themselves thereon in a brush-like formation, carrying with them the smaller printing particles. The rotating auger spreads the mixture laterally, and the multipole magnetization of the layer **35** causes the brush-like formation to assume a series of substantially uniform undulations **41** on the surface of the roller **15**. The degree of undulation may be controlled by the relationship of the individual magnets to each other in the multipole magnetization.

As the mixture in this undulating conformation approaches the applicator roller **17**, it is drawn from the weaker magnetic attraction of the roller **15** to the stronger magnetic attraction of roller **17** where the particles again assume an undulating brush-like conformation. If desired, a doctor blade or other suitable leveler may be used in conjunction with the applicator roller **17** in order to decrease the degree of undulation and thus deliver a more uniform quantity of particles to the printing area **44**.

The particles are brushed onto and form a "flat" against a printing screen or stencil **45** having a mesh fine enough to block the relatively large magnetic particles but which permits the finer printing particles to pass therethrough.

Although this magnetic brush feed system is described in conjunction with a screen electrostatic printing system disclosed in the Childress et al. patent, it may also be used with electrostatic printing systems wherein the toner is not passed through a screen into the electrostatic field, although provision would have to be made for separating the toner from the magnetic particles.

A conventional electrostatic field **46** of sufficient inten-

sity is generated in the gap between the applicator roller **17** and an article **47** to be printed. Preferably, the article is disposed close to, but spaced from, the opposite side of the screen **45**, and moving in clockwise direction (FIG. 1). The toner particles pass through the screen **45** into the electrostatic field **46** and are propelled and adhere to the article **47**.

Preferably, the screen may be moved to the left (FIG. 1), in synchronism with movement of the article **47**, but in opposition to the movement of the applicator roller **17** and the mixture **11** thereon, during a printing operation.

Following the printing operation, the screen **45** is raised out of contact with the brush-like conformation of the mixture on the applicator, and is moved to the right (FIG. 1) to repeat the printing cycle.

The magnetic particles and any excess of toner printing particles remaining on the applicator roller **17** are removed therefrom by a doctor blade **49** and gravitate, directed by suitable chutes or baffles **51**, to the interior of roller **15**. Fixed to interior portions of the roller are a plurality of vanes **52** so arranged that, as they move with the roller, they mix and direct the particles transversely across the interior of the roller and into the bin **12**. Of course, other suitable means or chutes could be used to direct the doctored particles into the bin **12**.

Addition of toner printing particles to the mixture is of course made continuously or intermittently to retain the mixture at a desired ratio of toner printing to magnetic particles.

It is thought that the invention and many of its attendant advantages will be understood from the foregoing description, and it will be apparent that various changes may be made in the construction and arrangement of the parts without departing from the spirit and scope of the invention.

I claim:

1. An electrostatic printing apparatus, comprising:

a source of a mixture of magnetic particles and chargeable printing particles;

magnetic roller conveyor means having a surface layer of magnetic rubber of predetermined thickness for feeding said mixture of said magnetic particles and chargeable printing particles from said source to the surface of a movable applicator roller, the lower portion of said conveyor means being immersed in said mixture;

said movable applicator roller having a surface carrying a multipole magnetization, said multipole magnetization extending across the roller in a fixed linear relationship;

said multipole magnetization on said applicator surface having a magnetic field strength greater than the magnetic field strength of said magnetic conveyor means;

means for creating an electrostatic field across a gap between said applicator means and an article to be printed upon, whereby said magnetic particles and chargeable particles are built up in a brush-like layer across the surface of said roller applicator means and said chargeable printing particles are transferred across a gap from said mixture on the applicator means to said articles;

and means for receiving, agitating and returning any excess mixture to said source, through said conveyor means.

2. The apparatus as set forth in claim **1** wherein said multipole magnetization is oriented along lines substantially parallel to the axis of said roller conveyor means.

3. The apparatus set forth in claim **1** wherein the surface layer of the applicator roller is of magnetic rubber of predetermined substantially uniform thickness.

4. The apparatus set forth in claim **1** wherein said magnetic conveyor means for feeding the mixture of particles is a conveyor roller having a surface carrying a multipole magnetization along lines substantially parallel to the axis of the roller.

5. The apparatus of claim **1** wherein the thickness of said layer of magnetic rubber is greater on said applicator roller than on said conveyor roller whereby the field strength of the applicator roller is greater than that of the conveyor roller.

6. The apparatus set forth in claim **1** wherein the diameter of said conveyor roller is larger than that of said applicator roller.

7. The apparatus of claim **1** wherein there is provided means adjacent said source and spaced a predetermined distance from the surface of said conveyor roller for distributing and leveling the mixture over the surface of the roller as the mixture is picked up from the source by the magnetic surface of the roller.

8. A powder ink feeding device for use in an electrostatic printing apparatus, comprising:

a source of a mixture of magnetic particles and chargeable printing particles;

magnetic conveyor means having surface multipole magnetization for feeding said mixture from said source to a movable applicator which then carried said mixture into a printing screen within an electrostatic printing field;

multipole magnetization on the surface of said applicator, the magnetic field strength of said applicator magnetization being greater than the magnetic field strength of said conveyor means;

means for removing an excess of said mixture from said applicator and for delivering it to the interior of said conveyor means;

and means within said conveyor means and movable therewith for receiving, agitating and returning said excess mixture to said source.

References Cited

UNITED STATES PATENTS

3,003,462	10/1961	Streich	118—637
3,015,305	1/1962	Hall et al.	118—637
3,064,622	11/1962	Thompson	118—637
3,081,698	3/1963	Childress et al.	
3,081,737	3/1963	Frantz et al.	118—637
3,098,765	7/1963	Keller et al.	118—637
3,133,833	5/1964	Giaimo	118—637
3,140,199	7/1964	York.	
3,145,122	8/1964	Streich.	
3,152,012	10/1964	Schaffert.	
3,152,924	10/1964	Wanielista et al.	118—637
3,202,092	8/1965	Childress.	
3,233,586	2/1966	Cranskens et al.	118—637
3,283,703	11/1966	Childress et al.	101—114
3,285,167	11/1966	Childress et al.	101—114
3,306,193	1/1967	Rarey et al.	101—114

ROBERT E. PULFREY, *Primary Examiner.*

E. S. BURR, *Examiner.*