2 Sheets—Sheet 1.

A. F. WARD.

Hoop-Coiling Machine.

No. 223,968. **Patented Jan. 27, 1880.**

Fig. 1.

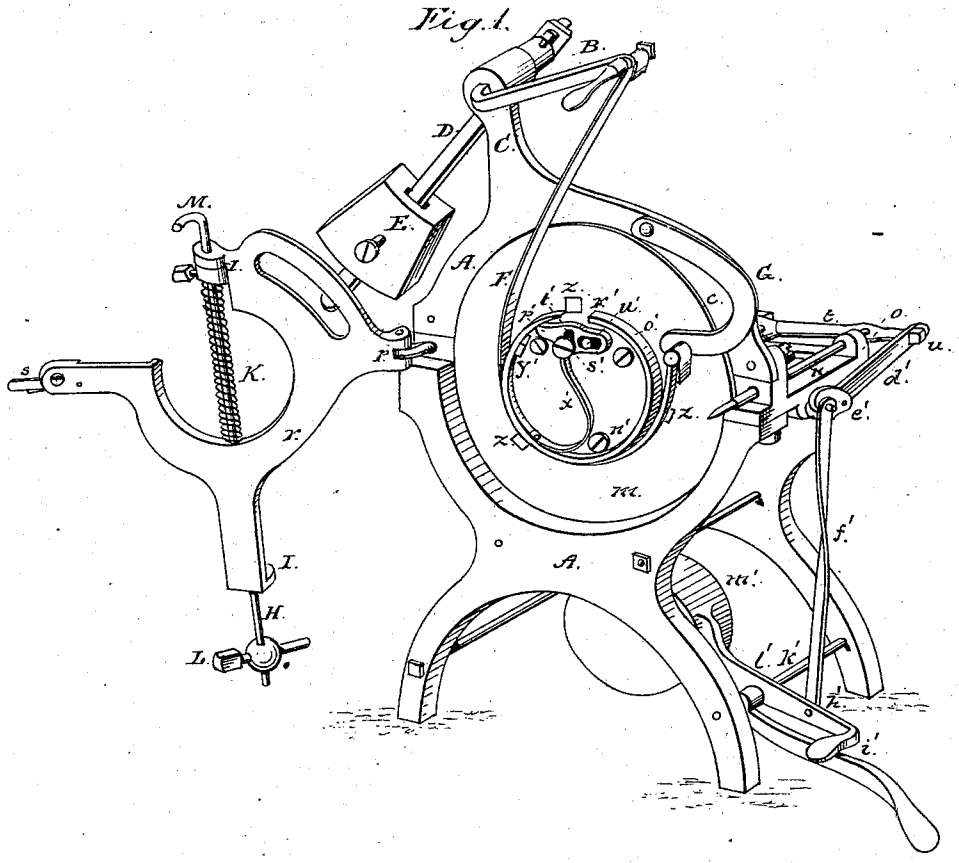

Fig. 2.

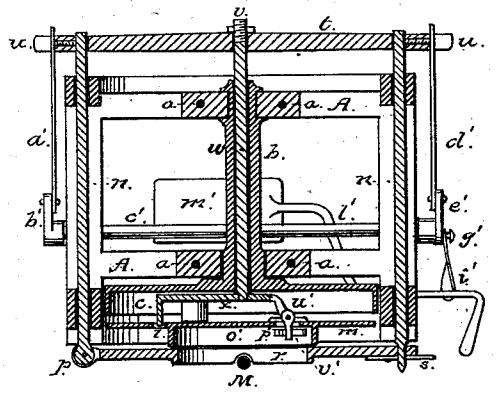

Fig. 3.

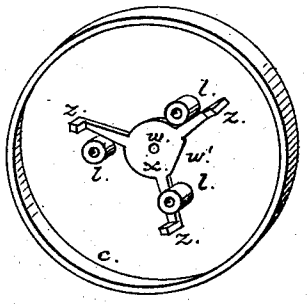

Attest:
F. W. Howard
R. N. Dyer.

Inventor:
A. F. Ward.
by Geo. W. Dyer,
Atty.

N. PETERS, PHOTO-LITHOGRAPHER, WASHINGTON, D. C.

2 Sheets—Sheet 2.

A. F. WARD.

Hoop-Coiling Machine.

No. 223,968. **Patented Jan. 27, 1880.**

Fig. 6.

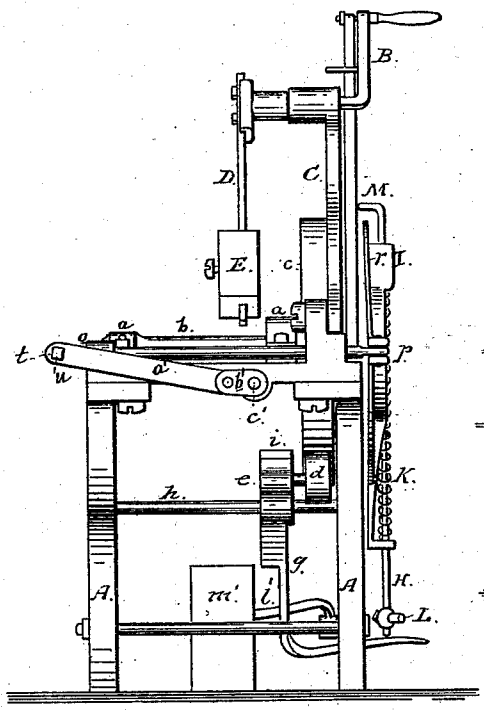

Fig. 4.

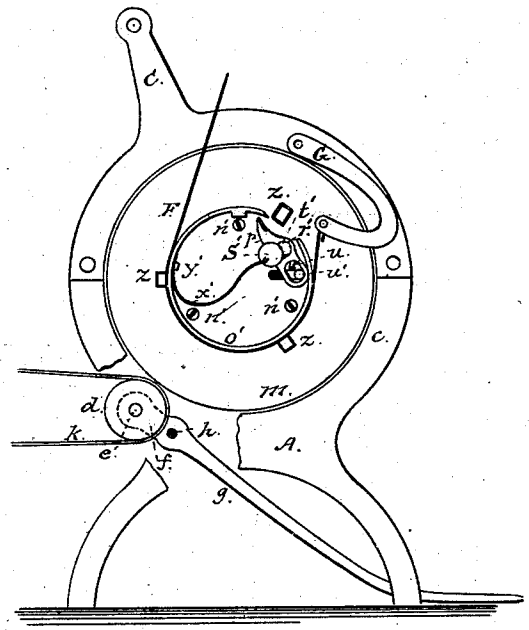

Fig. 5.



Attest:
A. Bartnel
E. P. Sprague

Inventor:
A. F. Ward
By Atty
Chas. S. Sprague

N. PETERS, PHOTO-LITHOGRAPHER, WASHINGTON, D. C.

UNITED STATES PATENT OFFICE.

ALEXANDER F. WARD, OF CHATHAM, CANADA, ASSIGNOR OF ONE-HALF OF HIS RIGHT TO S. C. BLINN AND M. A. ROWE, OF DETROIT, MICH.

HOOP-COILING MACHINE.

SPECIFICATION forming part of Letters Patent No. 223,968, dated January 27, 1880.

Application filed July 10, 1879.

To all whom it may concern:

Be it known that I, ALEXANDER F. WARD, of Chatham, in the county of Kent and Dominion of Canada, have invented an Improvement in Hoop-Coiling Machines, of which the following is a specification.

The nature of my invention relates to new and useful improvements in that class of machines employed in coiling hoops for shipment; and the invention consists in the construction of the several parts and their arrangement and combinations, as more fully hereinafter set forth.

Referring to the drawings, Figure 1 is a perspective view with the gate thrown open. Fig. 2 is a horizontal section through the center. Fig. 3 is a perspective of the inner face of the head and attachments to the end of the hollow shaft. Fig. 4 is an elevation enlarged and with the gate removed. Fig. 5 is an enlarged detail, showing the spring finger or dog which confines the end of the hoop first fed into the machine. Fig. 6 is a side elevation.

Like letters indicate like parts in each figure.

In the accompanying drawings, which form a part of this specification, A represents the frame of the machine, which carries the working parts thereof, and upon it is journaled, in suitable boxes *a*, the hollow shaft *b*, upon the end of which is secured the hollow head *c*, the rim of which is finished upon the outside like a smooth pulley, to which motion is communicated by the friction-pulley *d*, which is secured to a counter-shaft, *e*, which runs in the shorter arm *f* of the lever *g*, by means of which the friction-pulley is thrown into or out of engagement with the outer face of the head, as desired. This lever is fulcrumed on the rod *h*, and upon the counter-shaft is another pulley, *i*, which receives motion from the belt *k* and any convenient power.

Projecting outward from the inner face of the head, and at regular intervals, are the rigid studs *l*, against the ends of which the disk *m* rests against the front of the hollow head. There are two rods, *n*, having a reciprocating motion in boxes *o* on the frame, near the rear end, while their front ends pass through the front of the frame, as shown in Figs. 1, 2, and 6. To the front end of one of these rods is hinged, at *p*, the gate *r*, which, when closed, engages with the other rod, and is secured by the spring-latch *s*. The rear ends of these rods *n* pass through the yoke *t*, in which they are made adjustable by means of the set-screws *u*. To the center of the yoke is adjustably secured, by means of the screw or threaded end and nut *v*, the shaft *w*, which passes through the hollow shaft *b* and head *c*, and upon its end is rigidly secured the spider *x* with three arms, as shown in Fig. 3, each arm terminating in right-angle projecting studs *z*. Motion is communicated to this shaft *w* from the head *c* by the engagement of the studs *l* with the arms of the spider *x*, as shown in Fig. 3.

At one end of the yoke *t* there is pivoted, by means of the set-screw *u*, a connecting-rod, *a'*, the opposite end of which is pivoted, by a suitable wrist-pin, to the crank *b'*, which is rigidly secured to the rock-shaft *c'*. To the opposite end of the yoke *t* there is pivoted, by means of the set-screw *u*, a similar connecting-rod, *d'*, the front end of which, by a suitable wrist-pin, is pivoted to the bell-crank *e'*, which is rigidly secured to the opposite end of the rock-shaft *c'*. These connecting-rods and cranks are so pivoted together and arranged with relation to each other that when the yoke is retracted, as shown in Fig. 6, it cannot be accidentally projected, as the pivotal connection at one end of the connecting-rods is below the point of pivot on the yoke, so that one locks the other.

To the bell-crank *e'* is pivoted the connecting-rod *f'* by means of the wrist-pin *g'*. The lower end of this rod *f'* is pivotally secured to the shorter arm *h'* of the treadle *i'*. This treadle is secured to the rock-shaft *k'*, and to its longer arm *l'* is secured the counterbalance-weight *m'*. Pressure upon the treadle will project the yoke and gate with their attachments, and, the pressure being relieved, the weight *m'* will retract the same.

The points of connection between the weight and treadle and the rock-shaft and between the cranks of the rock-shaft and the yoke *t* are so adjusted that when the weight strikes the floor in moving the door back to place

against the coiling-barrel the cranks will have moved a short distance below their centers, and will be locked from accidental movement upward by such position, and prevented from downward movement by the resting of the weight on the floor. The disk *m* covers the front of the hollow head, and is secured in place by the screws *n'* passing through the disk and into the studs *l*, which are tapped for that purpose. Through the disk are cut three rectangular holes, through which the studs *z* are projected when the yoke *t* and its attachments are projected. When the latter is withdrawn the studs are retracted so that their outer ends are just within the front face of the disk. To this front face is secured the annular ring or short barrel *o'*, with a short segment cut out, as at *r'*. A clutch-finger, *p'*, is secured to the front face of the disk by means of the set-screw *s'*, which passes through the slot *t'* through said finger. A lever, *w'*, is pivoted through the disk, so that its outer end projects through the same and enters the slot *v'* in the clutch finger or dog *p'*, and its opposite end engages with the squared side of the spider-head *w'*, so that when the latter is retracted with the yoke the lever will compel the dog to perform the function for which it is designed, and when the yoke and its attachments are projected the lever will release the dog. A leaf-spring, *x'*, one end of which is rigidly secured at *y'*, engages with the notch *z'* on the side of the dog, to hold the same upon its movable fulcrum, made by the slot *t'* and set-screw *s'*, and allows the dog to act upon thinner or thicker hoops as they may be presented. The crank B is pivoted through a projection, C, of the frame, and has an arm, D, rigidly secured to it, at the lower end of which is fastened the weight E. To this crank is removably secured the band F, which passes under the ring or barrel *o'*, and its opposite end is removably secured to a swinging support, G, pivoted to the front of the frame. A vertical rod, H, has a reciprocating motion in bearings I in the front of the gate *r*. A coil-spring, K, through which said rod passes, is so arranged as to keep the rod elevated, except when depressed by pressure upon the foot-piece L. The upper end of this rod is bent backward to form a detent, M, for the purposes hereinafter described.

In practice, with the machine constructed as above, the yoke, with its attachments, is retracted, as shown in Fig. 2, with the gate closed. The end of a hoop is inserted through the cut-away portion of the ring or coiling-barrel between the inner edge thereof and the point of the dog, which gives upon its movable fulcrum to receive the end of the hoop presented. The machine is then started, when the hollow head commences rotating, its studs engaging with the arms of the spider, compelling the shaft *w* to also rotate, when the projections or studs *z* of the arms of the spider are presented through the holes in the disk, which is secured upon the studs *l*, and is thereby caused to rotate, coiling the hoop on the outside of the annular ring or coiling-barrel, against which it is held by the band F, the proper tension of which is secured by the weight E upon the arm, which secures said weight to the crank B, to which one end of the band is secured. The lap of the next hoop presented is inserted under the end of the coiled hoop, and so the next, until the roll or coil of hoops is as large as required, when pressure upon the foot-rest L compels the bent end or hook M of the rod H to rest upon the free end of the last hoop coiled and hold it until it is nailed. Then pressure upon the treadle *i'* will project the yoke *t*, with its attachments and gate *r*, to the front, when the studs *z*, projecting through the coiling-disk *m*, will force the coil of hoops from the ring or coiling-barrel, and such coil will then drop to the ground through the space between the gate and disk caused by projecting the yoke and its attachments, which at the same time disengages the spider-head *w'* from the lever *w'*, thereby releasing the dog. The yoke and its attachments are then retracted by relieving the pressure on the treadle, and the machine is in readiness to coil another roll of hoops. Should a hoop break in the process of coiling, the gate should be thrown open, as shown in Fig. 1, after releasing the spring-latch *s*, when the broken hoop is easily removed.

The adjustability of the yoke upon the side rods and center shaft will allow the machine to be employed in coiling hoops of different widths.

I am aware of the patents granted to J. Tomlinson and J. H. Ward, and numbered, respectively, 159,289 and 209,735, and hereby disclaim the same.

What I claim as my invention, and desire to secure by Letters Patent, is—

1. In a hoop-coiling machine substantially as described, the combination, with the coiling-barrel, of a door, *r*, secured to the slides or rods *n*, and moved by such slides away from and toward said coiling-barrel, said door being hinged to one slide and removably locked to the other, so that it can be thrown open to remove broken hoops or to examine the machine, as set forth and shown.

2. In a hoop-coiling machine, the combination of the door *r*, secured to moving slides or rods *n*, which are adjustably secured to the operating-yoke *t*, whereby the door can be adjusted toward or away from the coiling-barrel and hoops of different widths can be coiled thereon, substantially as described and shown.

3. In a hoop-coiling machine, the hollow head *c*, provided with studs *l*, and secured upon the end of the shaft *b*, in combination with a disk, *m*, provided with a coiling-barrel, *o'*, the said disk being supported off from the face of the head to allow for the movement of the thrusting mechanism between the same and the head, substantially as and for the purposes specified.

4. In a hoop-coiling machine, the hollow

shaft *b*, carrying a hollow head, *c*, to which the coiling-disk *m* is secured, in combination with the shaft *w*, passing through said hollow shaft, and spider *x*, provided with projecting studs *z* through holes in said disk, for the purpose of thrusting a coil of hoops off from the coiling-barrel *o'*, substantially as set forth.

5. In a hoop-coiling machine, the hollow shaft *b*, carrying a hollow head, *c*, to which the coiling-disk *m* is secured, in combination with the shaft *w*, passing through said hollow shaft, spider *x*, and lever *w'*, for the purpose of actuating the dog *p'*, substantially as described.

6. In a hoop-coiling machine, the ram consisting of the rods or slides *n* and shaft *w*, adjustably secured to the yoke *t*, connecting-rods *a' d'*, cranks *b' e'*, rock-shaft *c'*, pitman *f'*, treadle *i*, fulcrum *k'*, and weight *m'*, the parts being constructed to operate substantially as and for the purposes specified.

7. In a hoop-coiling machine, the dog *p'*, provided with a movable fulcrum, substantially as described, combined with and actuated by the lever *w'* and spider-head *w'*, substantially as and for the purposes set forth.

8. In a hoop-coiling machine, the dog *p'*, provided with a movable fulcrum, substantially as described, and actuated by the lever *w'*, in combination with the spring *x'*, for the purpose of allowing the dog to adjust itself to different thickness of hoops, substantially as described.

9. In a hoop-coiling machine, the combination, with the coiling-barrel, of the rod H, sliding vertically in brackets on the door *r*, and having bent upper end, M, the spring K, and foot-piece L, for actuating the rod, substantially as described and shown.

10. In a hoop-coiling machine, the combination of the door *r* and moving slides or rods *n* with the rock-shaft *c'*, operated by treadle *l'* and weight *m'*, the cranks *b' e'*, and rods *a' d'*, the parts being arranged substantially as described and shown, whereby when the weight *m'* strikes the floor in moving the door toward the coiling-barrel the cranks will be below their centers, and thereby locked from accidental movement.

ALEXANDER F. WARD.

Witnesses:
H. S. SPRAGUE,
A. BARTHEL.