(12) INTERNATIONAL APPLICATION PUBLISHED UNDER THE PATENT COOPERATION TREATY (PCT)

(19) World Intellectual Property Organization
International Bureau

(43) International Publication Date
15 August 2013 (15.08.2013)

WIPO | PCT

(10) International Publication Number
WO 2013/117450 A1

(51) International Patent Classification:
B62M 25/04 (2006.01) *B62M 25/08* (2006.01)
B62M 9/122 (2010.01)

(21) International Application Number:
PCT/EP2013/051575

(22) International Filing Date:
28 January 2013 (28.01.2013)

(25) Filing Language: English

(26) Publication Language: English

(30) Priority Data:
P 201200098 6 February 2012 (06.02.2012) ES

(71) Applicant: **ROTOR COMPONENTES TECNOLÓGICOS S.L** [ES/ES]; C/ Miño 14, Polg. Industrial Conmar; Aljalvir, E-28864 Madrid (ES).

(72) Inventors: **CARRASCO VERGARA, Pablo**; C/ Miño 14, Polg. Industrial Conmar; Aljalvir, E-28864 Madrid (ES). **MARTINEZ GARCÍA, David**; C/ Miño 14, Polg. Industrial Conmar; Aljalvir, E-28864 Madrid (ES). **CARTÓN CORDERO, Carlos, Miguel**; C/ Miño 14, Polg. Industrial Conmar; Aljalvir, E-28864 Madrid (ES). **FLORIDO COBOS, Eleazar**; C/ Camino de Suarez nº 53, 6º E, E-29011 Málaga (ES).

(74) Agent: **LORENTE BERGES, Ana**; Avda. General Perón 19, bajo c, E-28020 Madrid (ES).

(81) Designated States *(unless otherwise indicated, for every kind of national protection available)*: AE, AG, AL, AM, AO, AT, AU, AZ, BA, BB, BG, BH, BN, BR, BW, BY, BZ, CA, CH, CL, CN, CO, CR, CU, CZ, DE, DK, DM, DO, DZ, EC, EE, EG, ES, FI, GB, GD, GE, GH, GM, GT, HN, HR, HU, ID, IL, IN, IS, JP, KE, KG, KM, KN, KP, KR, KZ, LA, LC, LK, LR, LS, LT, LU, LY, MA, MD, ME, MG, MK, MN, MW, MX, MY, MZ, NA, NG, NI, NO, NZ, OM, PA, PE, PG, PH, PL, PT, QA, RO, RS, RU, RW, SC, SD, SE, SG, SK, SL, SM, ST, SV, SY, TH, TJ, TM, TN, TR, TT, TZ, UA, UG, US, UZ, VC, VN, ZA, ZM, ZW.

(84) Designated States *(unless otherwise indicated, for every kind of regional protection available)*: ARIPO (BW, GH, GM, KE, LR, LS, MW, MZ, NA, RW, SD, SL, SZ, TZ, UG, ZM, ZW), Eurasian (AM, AZ, BY, KG, KZ, RU, TJ, TM), European (AL, AT, BE, BG, CH, CY, CZ, DE, DK, EE, ES, FI, FR, GB, GR, HR, HU, IE, IS, IT, LT, LU, LV, MC, MK, MT, NL, NO, PL, PT, RO, RS, SE, SI, SK, SM, TR), OAPI (BF, BJ, CF, CG, CI, CM, GA, GN, GQ, GW, ML, MR, NE, SN, TD, TG).

Published:

— *with international search report (Art. 21(3))*

(54) Title: BICYCLE SINGLE-ACTED GEAR-SHIFTING DEVICE AND ITS UNIDIRECTIONAL OPERATOR MECHANISM

FIGURE 15:

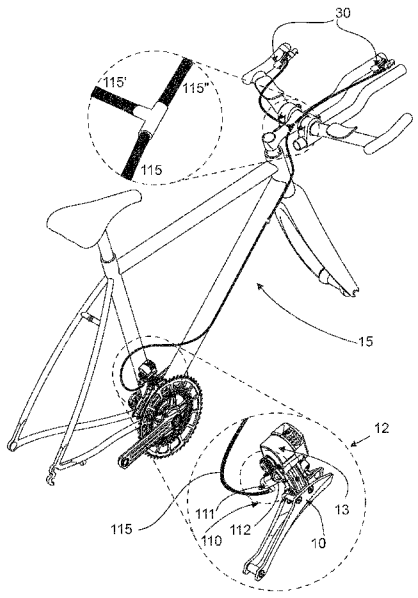

(57) Abstract: Bicycle single-acted gear-shifting device (12), comprising one front or rear derailleur (10, 20) coupling a ratchet indexing mechanism (13) acted by only one single-acting slave-connector (110, 120) attached to said ratchet indexing mechanism (13), operated by a unidirectional operator mechanism (15) with optional multiple unidirectional handle operator units (30). Said ratchet indexing mechanism (13) removably defines and holds a plurality of predetermined working stable positions of the derailleur's cage-plate (102, 202) for each gearshift, and it comprises a ratchet-gear (1) with a pawls' system. And said unidirectional operator mechanism (15) comprises optional multiple unidirectional operator units (30) connected in parallel with the only single-acting slave-connector (110, 120), in order to indistinctly operate it, by means of a branched single-acting drive circuit (115, 123) which can be arranged either using a hydraulic circuit (115, 115', 115") acting by pushing, or using flexible cables (123,123') and housings (124) to act by pulling.

WO 2013/117450 A1

BICYCLE SINGLE-ACTED GEAR-SHIFTING DEVICE AND ITS UNIDIRECTIONAL OPERATOR MECHANISM

The present invention relates to a bicycle single-acted gear shifting device for a chain transmission system incorporating a multiplicity of chainrings or sprockets in order to obtain different gear ratios, which comprises a derailleur coupled to an indexing mechanism driven by a unidirectional operator mechanism in order to shift, by making the chain to switch from one sprocket to another in the case of the rear derailleur, or from one chainring to another in case of the front derailleur.

PRIOR ART

Most bicycles use a chain transmission system, where pedaling power is driven from a chainring attached to a crankset, to a sprocket attached to the rear wheel. Generally there is a set of sprockets on the rear wheel which may be combined with a multiplicity of chainrings on the crankset to obtain a large number of gear ratios. The gearshifts work switching the chain between the alternative different chainrings of the crankset and/or the alternative different sprockets at the wheel.

The available mechanism of the bicycles to switch the chain from one to another sprocket is called rear derailleur, and that one switching the chain between the different chainrings is called front derailleur. The rear derailleur works with the non-driving portion of the chain, so it serves double duty: firstly, switching the chain between rear sprockets, and secondly, keeping the chain without looseness. In order to accomplish this second task, keeping the chain in tension, the rear derailleur needs to pull the lack portion of the chain by means of a cage plate with pulleys and at least one spring. Otherwise both derailleurs work alike: they have a floating chain guide cage or cage-plate, moved laterally by the cyclist's action on shifting levers for changing gears.

The rear derailleur control unit has defined as many positions as the number of sprockets engaged to the rear wheel, but this criterion is not always maintained in the case of the front derailleur, as sometimes the same chainring is associated with different derailleur positions enabling cross chain

works without noise by rubbing, for example when working with the outer chainring and inner sprockets.

In order to support said floating cage-plate, a movable member is needed, usually performed as a swing-arm implemented with a parallelogram structure, consisting of two parallel semi arms which configure the bearing structure of the cage-plate. The shifting action produces a movement, usually a rotation, in the movable member and consequently a lateral displacement of said cage-plate.

Currently in the Prior Art, Bowden cable manually operated derailleurs are widely used. In these cable operated shifting systems, a main-spring forces the movable member to a first direction, to one end of its working range, and the cable works in a second direction, opposite to the first mentioned, defining the derailleur working position to engage the determined gear. In order to removably define and hold the different positions corresponding to the gears, ratchet indexing mechanisms attached to shifting-levers at the handlebars are commonly used. These ratchet indexing mechanisms basically comprise: a base member supporting a toothed ratchet-gear defining the derailleur working positions; a pulley attached to said ratchet-gear in order to pull and pick the cable up; a lock-element securing the ratchet-gear positions against the action of the mentioned main-spring located at the other end of the cable where the derailleur is; and a drive-element, attached to a first shifting-lever and biased toward the ratchet-gear, being only engaged when is actuated by said shifting-lever. Said drive-element pushes the ratchet-gear pulling the cable and thus moving the derailleur cage in the abovementioned second direction. This drive-element is disengaged due to release-means when said first shifting-lever returns to its rest position.

The mentioned ratchet-gear is usually performed as a complete or portioned toothed wheel. The lock-element and the ratchet-gear teeth shapes are such that they permit a free wheel rotation in the mentioned second direction, opposed to the main-spring action. In the other hand, in order to make the ratchet-gear rotate in the referred first direction, it is necessary an ejector element operated by a shifting lever to release the lock-element in

order to engage the next ratchet-gear tooth. That shifting lever, which operates the ejector element, may be a second shifting lever in the case of a double-acting operator device, or may be the above mentioned first shifting lever in the case of a single-acting operator device, naming it single shifting lever. There are several documents disclosing these two options, citing Shimano EP0485955 as example of a double-acting operation, and Armstrong US3972247 as example of single-acting operation.

Furthermore, must be mentioned an alternate embodiment where the double-acted ratchet-gear is not performed as a wheel, but as a linear toothed element, as it is disclosed in the document US2008115616, where the indexing mechanism has been attached, as well, to the shifting lever located at the handlebar.

As the bicycle comprises at least, one articulation involving both derailleurs to enable the handlebar rotation, and at least another joint affecting the rear derailleur due to its function of chain tensioner, the actuating cables need flexible housings in order to support it. It is necessary to hold the cable under tension, as anchored as possible, from the shifters to the derailleurs, regardless to the housings routing shape.

But these housings and cables involve a lack of precision in operation, on one hand due to the elastic behavior in tension-compression work of the cable/housing set, and on the other hand due to free space between the cable and its housing. This clearance also varies during the assembly life due to wear, lubricant state and dirt. Furthermore, the stiffness of the inner steel cable is an essential parameter due to its effect on the accuracy of operation thereof, as well as in the conservation of said accuracy during all the cable working life. Thus, as the cable passes over a pulley and is bent to conform to the shape of the elements involved, the inner steel cable suffers permanent deformations modifying its stiffness in the working direction, so that reducing the performance accuracy.

Therefore, there is lack of precision in the gear-shifting system using an indexing mechanism located at the shifting levers with a Bowden cable linking it to the derailleur.

Must be mentioned that several documents show similar control solutions, arranged on the handlebars, but whose action on the derailleurs is performed by a hydraulic circuit instead of by cable. Examples of this include Shimano US2007163378A1, disclosing a double-acting shifting operator.

In addition, DE19514267A1 describes a double-acting hydraulic shifting system with an indexing mechanism coupled to the derailleur, but without a ratchet mechanism as described above, citing similar case of the company Acros and its double-acting A-GE system for mountain bike.

On the other hand, associated with racing and high end bicycles, recently there are also electronic derailleurs fed by a battery and controlled by a CPU, as the system disclosed in Shimano EP1832504. With these systems we can get very high performance, although the weight and especially the price are penalized. They also could bring additional disadvantages in its common use, as a negligent discharge of a battery or a fault due to deficient water tightness.

The background of the proposed invention is the document Armstrong US3972247, proposing, in a preferred embodiment, a Bowden cable shifting system, in which the derailleur is acted in response to a unidirectional movement of a single shifting lever. So that, a short stroke of the lever would change the derailleur position in the abovementioned first direction, while a longer stroke of said lever would move the derailleur in the opposite direction, loading the main-spring, and moving the cage-plate a determined distance in order to switch the chain to the corresponding sprocket or chainring. This single-acting operation has been successfully adopted by SRAM EP1698550. In these two documents the indexing mechanism has been attached to the operator control levers comprising the shifters, located at the handlebar.

In the mentioned US3972247, Armstrong considered as well the alternative of placing a ratchet indexing mechanism attached to the derailleur itself, increasing the operation accuracy, avoiding typical looseness and disarrangements related to Bowden cable systems. However said alternative embodiment did not become a real product.

Another alternative embodiment disclosed by Armstrong considered placing the ratchet indexing mechanism, attaching its base member onto the bicycle frame in an intermediate position between the single shifting lever and the derailleur, performing both connections by means of Bowden cable.

These two latter cited documents relate basically the same single-acted ratchet indexing mechanism, comprising the above common elements: a main spring, a ratchet-gear, a lock-element, etc. and an acting member which engages the drive-element. Said drive-element only acts engaging the ratchet-gear when said acting member is operated by the single shifting lever. Those mentioned ratchet indexing mechanisms are essentially characterized in that, either the acting member or the drive-element is provided with an ejector-element to release the lock-element, thus avoiding the need of a second shifting lever.

Said ejector-element releases the lock-element disengaging the previously secured ratchet-gear tooth, just at the beginning of the acting member displacement range following the mentioned second direction (corresponding to the beginning of the shifting lever displacement range), and before the drive-element engages the ratchet-gear. Thereupon the ratchet-gear moved by the main spring following the mentioned first direction, called backward, moves towards the drive-element and remains waiting the shifting lever operation to re-engage the lock-element. This ratchet-gear will move in the first direction engaging the following tooth when the single shifting lever makes a short downshifting movement, or it will move in said second direction engaging the following one or more teeth when the single shifting lever makes a long upshifting movement.

To operate a ratchet indexing mechanism the cyclist usually handles the shifter from the handlebar somewhere, using shifting levers in case of manual systems, or buttons in case of electronic systems. The left hand commonly controls the front derailleur and the right one the rear derailleur. These levers or buttons are arranged close to the natural hands position for safety and efficacy. Therefore, they are usually coupled with the brake levers and in the case of road racing bicycles, each shifting lever is integrated into a single housing set with one brake lever, so a single housed operator unit

corresponds to each hand, including the levers for one brake and for one derailleur.

However, in the case of time-trial bicycles (frequently used in triathlon), the handlebar comprises two widely separated areas for gripping hands: first the natural bike steering support with the two hands at the two extremes on the bull horn shaped handlebar (called basebar); and second, the two forward extension bars engaged at the central basebar area, for gripping hands when the cyclist is placed in an aerodynamic position. Then, in this handlebar arrangement the brake levers are located at the extremes of the basebar as it is the maximum stability and control gripping position, while the manual shifting-levers do it usually in the extension bars, as they are the natural grip for aerodynamics' performance. Here is where the electronic systems have a great advantage, because they are able to have multiple buttons for executing the same action, being able to shift gears from both gripping areas, achieving a big safety and efficacy improvement in race.

SUMMARY OF THE INVENTION

The object of the present invention is to obtain an overall improvement in the bicycle gear shifting system, upgrading the accuracy of operation, the maintenance, the reliability, the safety, the price and also achieving a weight reduction.

To this end, we propose a "single-acted gear shifting device", which is driven by a "unidirectional operator mechanism".

- Said single-acted gear shifting device comprises one derailleur (front or rear) coupling a ratchet indexing mechanism acted by only one single-acting slave connector attached to said ratchet indexing mechanism.

- Said unidirectional operator mechanism comprises one or more unidirectional handle operator units, each one of them comprising a single shifting lever coupling a single-acting master connector, and a single-acting drive circuit.

Firstly, we are going to mention the components of said single-acted gear shifting device.

The mentioned derailleur comprises: a derailleur body, a movable member and a chain-guide or floating cage-plate. The derailleur body is responsible for supporting the movable member which carries said cage-plate.

Said single-acted ratchet indexing mechanism comprises a base member arranging a toothed ratchet-gear with a lock-element and a drive-element for sequentially locking and releasing the ratchet-gear positions. Due to a main spring, the ratchet-gear is biased to a first direction to one end of its displacement range; on the contrary, the lock-element action against any of the ratchet-gear tooth blocks its movement in said first direction. Said ratchet-gear is mechanically connected to the movable member of the derailleur to determine the cage-plate positions corresponding to the different gears. In addition, said drive-element is carried by an acting member able to move relative to the ratchet-gear in the first direction and in the opposite, second direction, due to the action of the abovementioned single-acting slave connector to which is mechanically coupled in order to operate the single-acted ratchet-indexing mechanism. Besides there is an ejector-element also driven by said acting member in order to release the lock-element from its locking position just only at the beginning of each shifting action, that is to say, along the first portion of the complete forward displacement range of the acting member, portion called ejecting action range.

Secondly, said unidirectional operator mechanism may comprises multiple unidirectional handle operator units connected in parallel to said bicycle gear shifting device by means of a branched single-acting drive circuit, arranged by hydraulic or by Bowden cable means, connecting said unidirectional handle operator units with the only one single-acting slave connector of the bicycle gear shifting device.

Each unidirectional operator unit comprises a single shifting lever or push button coupling a single-acting master connector. Said single shifting lever only actuates in response to unidirectional movement thereof, so that a short stroke of it causes a down-shifting movement of the derailleur's cage-plate, while a longer stroke of said lever causes an up-shifting movement.

In addition, each mentioned unidirectional operator unit can also integrate into one single handgrip housing, a brake-lever next to the shifting

lever; so a single housed unit corresponds to each hand, including the operator levers for one brake and for one derailleur.

So, in a preferred embodiment of the invention, it is proposed a hydraulic single-acted gear shifting device with a hydraulic unidirectional operator mechanism which may comprises multiple unidirectional handle operator units to indistinctly operate the same derailleur and a branched hydraulic single-acting drive circuit. The mentioned single-acting slave-connector comprises in this case a hydraulic slave piston and cylinder. Each aforementioned operator unit usually located on the handlebar comprises a unidirectional single shifting lever coupling a master-connector comprising, in turn, a hydraulic master piston and cylinder. In order to operate the single-acting drive circuit, the shifting-lever moves the piston within the master-cylinder and therefore pushes hydraulic fluid into the circuit transmitting the action to the only one single-acting slave connector.

In an alternative embodiment of the invention, it is proposed a bicycle gear shifting device with a cable unidirectional operator mechanism, comprising a branched cable single-acting drive circuit and multiple unidirectional operator units to indistinctly operate the same derailleur. This arrangement is similar to the widely used cyclocross duplicate brake levers. The mentioned single-acting slave-connector comprises, in turn, a cable pulley or articulated connecting rod. Each aforementioned operator unit usually located on the handlebar comprises a unidirectional single shifting lever in order to pull the cable coupling a single-acting master-connector comprising, in turn, a cable pulley or connecting rod.

In said cable embodiment, the unidirectional operator mechanism involves more friction and maintenance than the hydraulic one, and it does not provide a solution as elegant when connecting branched cables. But it can still be interesting for being the most widespread technology in the bicycle industry, and having the presumably lowest economic cost.

One essential aspect of the present invention is the option of multiple operator units to indistinctly act on the same bicycle gear shifting device, as in the electronic systems, to increase the safety and efficiency of the cyclist. This is achieved due to the unidirectional operation of the gear shifting

system: firstly in the single shifting levers that act only in one direction; secondly in the single-acting drive circuit which can be branched due to said unidirectional actuation; and finally in the single-acted ratchet indexing mechanism which needs only one acting-element operated through the only one slave connector.

In the particular case of handle operator units for road racing bicycles, the volume is a critical factor because is limited by the human hand size, as they arrange in one single handgrip housing both brake and shifting operator units. This is a technical problem not yet solved in the Prior Art by hydraulic shifting-systems, but the hydraulic embodiment of the present invention discloses a solution to this difficulty due to two main factors: in one hand, by removing the indexing mechanism from the shifters; and in the other hand, by using one single-acting cylinder in the master connector that take up less space compared to one double-acting cylinder, or two single-acted cylinders.

Another improvement of the present invention is to increase the shifting accuracy by placing the ratchet indexing mechanism attached to the derailleur, at the end of the single-acting drive circuit. This enhancement is even more appreciated in case of cable operator mechanisms, because now neither the elasticity of the assembly cable/housing, nor their looseness of fit, cleaning or lubrication does influence. Additionally, this accuracy is similar to electronic shifting systems, and we can achieve it with similar cost price to manually operated mechanical systems. Such accuracy is also independent of the single-acting drive circuit maintenance, either hydraulic or cable means, being the reliability as well independent of any moisture that may affect the electronic systems, and without the uncertainty for its battery life.

Finally we also achieve a competitive advantage in weight reduction with regard to conventional mechanical systems, as they use steel cables and housings, because with the proposed unidirectional operator mechanism we can use thinner elements or synthetic materials for the single-acting drive circuit. And in the case of hydraulic single-acting drive circuit, we reduce weight due to the circuit itself, which consists of plastic pipes and fluid, much lighter than the steel cables and housings.

BRIEF DESCRIPTION OF THE FIGURES

• FIG. 1A and FIG. 1B show a front derailleur (10) coupling a ratchet indexing mechanism (13) to establish the positioning of its cage-plate (102). We can also see the derailleur body (101), the movable member (303) performed as two semi swing-arms (103 and 104), the main spring (105), resting means (14) and the movable member extension (104').

• FIG. 2A and FIG. 2B show a hydraulic bicycle single-acted gear shifting device (12) comprising a front derailleur (10), a ratchet indexing mechanism (13) and a hydraulic single-acting slave-connector (110) comprising, in turn, a slave-cylinder (111) and a slave-piston (112) as operator elements of said ratchet indexing mechanism (13). In addition, the hydraulic slave-piston (112) engages a slave-rack (113) which moves a slave-pinion (114) attached to the main shaft (4) to integrally move the acting member (5).

• FIG. 3A, FIG. 3B and FIG. 3C show an alternative embodiment for a hydraulic bicycle single-acted gear shifting device (12) comprising a front derailleur (10), a ratchet indexing mechanism (13) and a hydraulic single-acting slave-connector (110) comprising, in turn, a slave-cylinder (111) and a slave-piston (112) as operator elements of said ratchet indexing mechanism (13). In addition, the hydraulic slave-piston (112) engages a slave-rack (113) which moves a slave-pinion (114) attached to the acting member (5). Furthermore, there is a secondary spring (122), which forces the slave-piston (112) to remain stable in its rest position.

• FIG. 4A and FIG. 4B show another embodiment for a hydraulic bicycle single-acted gear shifting device (12) comprising a front derailleur (10), a linear embodiment of the ratchet indexing mechanism (13) and a hydraulic single-acting slave-connector (110) comprising, in turn, as operator elements of said ratchet indexing mechanism (13), a slave-cylinder (111) and a slave-piston (112) integrally performed in a same element with the acting member (5). Furthermore, there is a secondary spring (122), which forces the slave-piston (112) to remain stable in its rest position.

• FIG. 5A and FIG. 5B show a cable embodiment for a bicycle single-acted gear shifting device (12) comprising a front derailleur (10) coupling a ratchet

indexing mechanism (13) and a cable single-acting slave-connector (120) comprising, in turn, a cable (123) and the corresponding cable slave-pulley (121) as actuating elements of said ratchet indexing mechanism (13). In addition there is a secondary spring (122), which forces the slave-pulley (121) to remain stable in its rest position.

• FIG. 6A and FIG. 6B show a rear derailleur (20) coupling a ratchet indexing mechanism (13) to establish the positioning of the cage-plate (202). We also can see the derailleur body (201), the movable member (403) performed as two semi swing-arms (203 and 204), the main spring (205), the resting means (14) and the movable member extension (203').

• FIG. 7A and FIG. 7B show a preferred embodiment for the ratchet indexing mechanism (13) including the following components: a base member (0), a ratchet-gear (1), a lock-element (2) provided with its lock-element extension (21), a drive-element (3), a main shaft (4), an acting member (5), an ejector-element (6) provided with a secondary side wedge (62), release-means (7) that are a protrusion belonging to the base member (0), and a transmission assembly (8) including: a traction-element (80), a rack (81) and pinion (82), an adjusting-element (83) and a transgressor-element (9).

• FIG. 8 schematically shows, using drawings in section of the ratchet indexing mechanism of FIG. 7, the sequence of movements T01, T02... up to T08, corresponding to a complete unitary upshifting, appreciating the different positions of the drive-element (3), the ratchet-gear (1), release means (7), the rest position of the acting member (5) determined by the resting means (14) being fixed to the base member (0), the lock-element (2) and the lock-element extension (21) provided with its two functional surfaces called lock-element peripheral wedge (211) and lock-element side wedge (212).

• FIG. 9 corresponds to the sequence of movements of the ratchet indexing mechanism T01, T02... up to T08, corresponding to the complete unitary upshifting of FIG. 8, and with an orthogonal view to the previous one, it shows the behavior of the elements involved in the lock-element (2) expulsion by means of its lock-element side wedge (212) surface in contact with a primary peripheral wedge (61) of the ejector-element (6) loaded by the slip-spring (60) and supported by the acting member (5).

• FIG. 10 shows a detail of the linear embodiment for the ratchet indexing mechanism (13) corresponding to FIG. 4, including the following components: a base member (0), a ratchet-gear (1), a lock-element (2), a drive-element (3), an acting member (5) integrally performed in a same element with the hydraulic slave-piston (112), an ejector-element (6), release-means (7), and a transmission assembly (8). In addition we can see its hydraulic single-acting slave-connector (110) comprising the mentioned hydraulic slave-piston (112), a slave-cylinder (111) and a corresponding single-acting drive-circuit (115).

• FIG. 11A, shows a hydraulic unidirectional operator unit (30) provided with a single shifting lever (116) and a hydraulic single-acting master connector (32), comprising a hydraulic master-cylinder (311) and master-piston (312), connected to a hydraulic single-acting drive-circuit (115). In FIG. 11B, 11C and 11D we can see a section and views of a cable acting unidirectional operator unit (30) provided with a single shifting lever (126), a cable master pulley (321) connected to a cable single-acting drive-circuit (123).

• FIG. 12A and FIG. 12B show a unidirectional hydraulic operator unit (30) for bicycle road racing, provided with a single shifting-lever (116) coupling a hydraulic single-acting master connector (32), comprising, in turn, a hydraulic master-cylinder (311) and a hydraulic master-piston (312), integrated into a single handgrip housing with a brake master-connector (40), comprising a hydraulic brake master-cylinder (411) and a hydraulic brake master-piston (412), connected to a hydraulic brake-lever (410) located next to the single shifting-lever (116).

• FIG. 13A and FIG. 13B show a unidirectional operator unit (30) actuated by cable comprising a single operator lever (416), and a single-acting master connector (32), including, in turn, a cable master pulley (321), and a cable single-acting drive-circuit (123). In this particular embodiment, this operator lever (416) has two functions depending on the kind of movement the cyclist does onto the lever: in one hand, rotating it to operate the bicycle gear-shifting device, and in the other hand, pushing it to operate the bicycle brake system.

• FIG. 14 shows a bicycle that incorporates two independent hydraulic bicycle single-acted gear shifting devices (12): one comprising a rear derailleur (20)

coupling a ratchet indexing mechanism (13) and a hydraulic single-acting slave-connector (110); and the other one, comprising a front (10) derailleur coupling a ratchet indexing mechanism (13), and a hydraulic single-acting slave-connector (110). Furthermore, each bicycle single-acted gear shifting device (12) is connected to a hydraulic unidirectional operator mechanism (15) which links, through its corresponding hydraulic single-acting drive circuit (115), each hydraulic single-acting slave-connector (110) with its corresponding unidirectional operator unit (30) located on the bicycle handlebar.

- FIG. 15 shows a bicycle that incorporates the hydraulic bicycle single-acted gear shifting device (12) of FIG. 2. which hydraulic single-acting slave-connector (110) is connected to a hydraulic unidirectional operator mechanism (15) which comprises a branched hydraulic single-acting drive circuit (115, 115', 115'') linking it to two hydraulic unidirectional operator units (30) connected in parallel and located on the handlebar (one on the extension bar corresponding to the time trial position, and the other one in the natural basebar position).

- FIG. 16 shows a bicycle that incorporates an alternative embodiment for a hydraulic bicycle single-acted gear shifting device (12) comprising a front derailleur (10), a ratchet indexing mechanism (13) and only one hydraulic single-acting slave-connector (110), this two latter fixed to the bicycle frame. Said hydraulic single-acting slave-connector (110) is connected with a hydraulic unidirectional operator mechanism (15) which comprises a branched hydraulic single-acting drive circuit (115, 115', 115'') linking it to two unidirectional operator units (30) connected in parallel and located on the handlebar. We can see, as well, an alternative embodiment for the transmission assembly (8) comprising: a hydraulic transmission master-connector (84), a hydraulic transmission slave-connector (85) and a hydraulic single-acting transmission circuit (86).

- FIG. 17 shows a bicycle that incorporates a bicycle single-acted gear shifting device (12) of FIG.5 which cable single-acting slave-connector (120) is connected to a cable unidirectional operator mechanism (15) which comprises a branched cable single-acting drive circuit (123,123') with their

corresponding housings (124,124'), linking it to two cable unidirectional operator units (30) connected in parallel and located on the handlebar (one on the extension bar corresponding to the time trial position, and the other one in the natural basebar position).

DETAILED DESCRIPTION OF A PREFERRED EMBODIMENT

We propose a hydraulic bicycle single-acted gear shifting device (12) comprising a front (10) or rear derailleur (20) attaching a single-acted ratchet indexing mechanism (13) acted therefore by only one slave-connector, which is a hydraulic single-acting slave-connector (110) operatively coupled to said ratchet indexing mechanism (13). Said single-acted gear shifting device (12) is acted by a hydraulic unidirectional operator mechanism (15) comprising: optional multiple handle unidirectional operator units (30), to indistinctly operate the same bicycle gear-shifting device (12), and a corresponding optional branched hydraulic single-acting drive circuit (115).

Said front (10) or rear derailleur (20), whose function is to execute the corresponding gearshift to the chainrings or sprockets, comprises: a floating cage-plate (102, 202) with variable working position corresponding to the different gears, a movable member (303, 403) which carries said floating cage-plate (102, 202), and a derailleur body (101, 201) attachable to the bicycle frame coupling said movable member (303, 403). This movable member (303, 403) is usually performed in a parallelogram configuration arranged by two semi-swing arms (103 and 104, 203 and 204) and is biased to one end of its displacement range forced by a main spring (105, 205).

Said single-acted ratchet-indexing mechanism (13), whose function is to removably define and hold a plurality of predetermined stable working positions of the movable member (303, 403) and consequently of the cage-plate (102, 202), comprises: a base member (0), that can be either coupled to the derailleur body (101, 201) or integrally performed in a same element with this latter; a main shaft (4) which is arranged by said base member (0); a toothed ratchet-gear (1), performed in a complete or portioned toothed wheel being able to rotate in the two opposite directions about the main shaft (4) axis, which is mechanically connected to said movable member (303, 403), so that the abovementioned main spring (105, 205) biases said ratchet

gear (1) to a first direction; a lock-element (2) which is a pawl coupled to said base member (0) to lock whichever of the ratchet-gear (1) positions; an acting member (5), supported by the main shaft (4), and being able to rotate forward and backward relative to the ratchet-gear (1), being backward the aforementioned first direction, in addition, there is a secondary spring (122) which biases said acting member (5) backward to its rest position determined by resting means (14); a drive-element (3) which is a pawl coupled to the acting member (5) in order to engage the ratchet-gear (1) and move it together with the acting member (5) for changing the ratchet-gear (1) predetermined working positions; an ejector-element (6) which is jointed and driven by said acting member (5) in order to release the lock-element (2) from its locking position just only at the beginning of each shifting action, that is to say, along the first portion of the complete forward displacement range of the acting member (5), portion called ejecting action range; release-means (7) which is preferably a wedged protrusion of the base member (0), in order to disengage said drive-element (3) from the ratchet-gear (1) when said acting member (5) goes back to its rest position; and a transmission assembly (8), mechanically connecting the movable member (303, 403) with the ratchet-gear (1), which converts the input displacement of the ratchet-gear (1) into an output displacement of the movable member (303, 403) and consequently of the cage-plate (102,202).

Said transmission assembly (8) comprises a traction element (80) to operatively connect the ratchet-gear (1) with the movable member (303, 403), and an adjusting-element (83) to adjust the lag phase between the position set by the ratchet-gear (1) teeth and the movable member (303, 403) position corresponding to the chain position according to the different gears. This traction element (80) in this preferred embodiment comprises a rack (81) and pinion (82). Said pinion (82) and the ratchet-gear (1) integrally moves together, and said rack (81) is jointed to the movable member (303, 403). Therefore, an input angular displacement in the ratchet-gear (1) is transformed into a linear movement in said traction element (80), and this, in turn, into an output rotation of the movable member (303, 403), resulting in the lateral displacement of the cage-plate (102,202).

Said mentioned traction element (80) might also have different arrangements maintaining the same function, citing as non exclusive embodiments: an articulated connecting rod with a strap, a pulley with a cable, etc.

The above mentioned hydraulic single-acting slave connector (110) is operated by hydraulic means in order to push the acting member (5) due to the fluid pressure moving it in the mentioned forward direction. Said hydraulic single-acting slave connector (110) comprises a hydraulic slave-cylinder (111) and a hydraulic slave-piston (112) mechanically coupled to the acting member (5) in order to define its position, and consequently to operate the single-acted ratchet-indexing mechanism (13). The abovementioned secondary spring (122) may be disposed, in a non limited embodiment, within the slave-cylinder (111) biasing said hydraulic slave-piston (112) into the slave-cylinder (111), and therefore biasing the acting member (5) in the backward direction to its rest position. Moreover, said single-acting slave-connector (110) is mechanically coupled to the acting member (5) by means of a slave-rack (113) which turns a meshed slave-pinion (114). Said slave-rack (113) is joined to the slave-piston (112) and said slave-pinion (114) is integrally coupled to the acting member (5).

The above described single-acted gear shifting device (12) is acted by a hydraulic unidirectional operator mechanism (15) which comprises at least one unidirectional handle operator unit (30), usually located on the bicycle handlebar (FIG. 14, 15), in order to operate by the cyclist the same bicycle gear-shifting device (12), and a corresponding optionally branched hydraulic single-acting drive circuit (115) linking said unidirectional operator units (30) with the only one hydraulic single-acting slave connector (110).

Each unidirectional operator unit (30) comprises only one unidirectional single shifting lever (116) or button which couples a single-acting master connector (32), comprising in turn a hydraulic master-cylinder (311) and a hydraulic master-piston (312). In order to operate the hydraulic single-acting drive circuit (115), the unidirectional single shifting-lever (116) moves the master-piston (312) within the master-cylinder (311) and therefore pushes hydraulic fluid into the single-acting drive circuit (115). Said unidirectional

single shifting lever (116) only actuates in response to a unidirectional movement thereof because it is one-to-one coupled to the hydraulic master-piston (312), just working pushing the hydraulic fluid. So, the cyclist operates the unidirectional operator mechanism (15) in order to drive the bicycle gear-shifting device (12), transmitting the cyclist action from the shifting-lever (116, 126) to the only one hydraulic single-acting slave-connector (110) located at the end of the circuit, which transmits the action, in turn, to the acting member (5) of the ratchet indexing mechanism (13) in order to move it. So a short stroke of the single shifting-lever (116, 126) causes a downshifting movement in the movable member (303, 403); while a longer stroke of said unidirectional single shifting-lever (116) causes an up-shifting movement of the movable member (303, 403).

The operation of the ratchet indexing mechanism (13) of the bicycle gear shifting device (12) is generally described as follows:

The ratchet-gear (1) is the element responsible for indexing the different shifting positions by means of their teeth. The main spring (105, 205) biases the movable member (303, 403) to one end of its rotation range following a downshifting direction and forces as well the ratchet-gear (1) to the corresponding direction, previously defined as the first direction.

The acting member (5) rotates around the main shaft (4) axis, having a rest position determined by a protrusion belonging to the base member (0) that limits its rotation range. Said acting member (5) carries the ejector element (6) and the drive-element (3) and it is connected to a secondary spring (122) that forces it backward, to said rest position (see FIG. 3A). The release-means (7) are fixed to the base member (0), and it only operates disengaging the drive-element (3) when the acting member (5) returns to its rest position. When the acting member (5) moves, first the drive-element (3) is removed from its rest position defined by the release-means (7), so said drive-element (3) can act on the ratchet-gear (1), and second the lock-element (2) is ejected from the previous secured tooth in the ratchet-gear (1), and third the drive element (3) engage and hold the ratchet-gear (1) to finally change to another ratchet-gear (1) position.

The lock-element (2) acts locking one of the teeth of the ratchet-gear (1) and it blocks the action of the main spring (105, 205), securing each of the different shifting positions of the ratchet-gear (1); the lock-element (2) has a lock-element extension (21) provided with two wedged contact surfaces called lock-element peripheral wedge (211) and lock-element side wedge (212). The lock-element peripheral wedge (211) is pushed by the ejector element (6) by means of a primary peripheral wedge (61), in order to release the lock-element (2) from a locking position when the acting member (5) moves forward just at the beginning of each shifting action, which means in the first portion of the complete displacement range of the acting member (5) (in a clockwise direction relative to FIG. 8), portion called ejecting action range starting in T02 and finishing in T04. And the lock-element side wedge (212) laterally displaces the ejector element (6) by means of its secondary side wedge (62), as we can see in FIG. 9 during sequences T06 and T07, when the acting member (5) moves backward (in a counterclockwise direction relative to FIG. 8) in order to deactivate said ejector element (6).

Said ejector-element (6) is jointed to the acting member (5) and it rotates integrally with it. Furthermore, this joint enables the ejector-element (6) to orthogonally pivot relative to the main shaft (4) axis, against a slip-spring (60) action, to laterally displace from its natural ejecting position. Said ejector-element (6) contains as well two wedged contact surfaces, one peripheral disposed forming a primary peripheral wedge (61), and the other one laterally disposed forming a secondary side wedge (62).

In order to let the ratchet-gear (1) to change its locked position in a down-shifting action, the acting member (5) must be moved forward but within the ejecting action range and then moved back to its rest position. So, firstly the ejector-element (6) ejects the lock-element (2) during said forward movement, secondly the drive-element (3) holds the ratchet-gear (1) against the main spring (105, 205) action, and finally during the backward movement, after the acting member (5) has overcame the abovementioned ejecting action range letting the lock-element (2) be ready to lock another ratchet-gear (1) tooth, the release-means (7) disengages the drive-element (3), when the acting member (5) returns to its rest position, in order to let the lock-element (2) to secure the next tooth of the ratchet gear (1).

In the other hand, during an upshifting movement, a longer stroke of the acting member is needed in order to overcome the abovementioned ejecting action range, to let the lock-element (2) to secure another tooth of the ratchet gear (1). Afterwards, this acting member (5) moves backward and the ejector-element (6) is laterally released by said lock-element (2) due to both corresponding wedges surfaces in contact, that is to say, the secondary side wedge (62) and the lock-element side wedge (212).

We can see in FIG. 8 and FIG. 9, the sequence of forward (clockwise) movements (T01-T02-T03-T04-T05) and backward (counterclockwise) movements (T05-T06-T07-T08) of the acting member (5) when performing an up-shifting action advancing only one tooth, beginning (T01) and ending (T08) in the same rest position. Moreover, FIG. 9 shows the function of the ejector-element (6), which operates ejecting the lock-element (2) when the acting member (5) moves forward, and avoiding it when the acting member (5) moves backward due to the secondary side wedge (62).

Finally, when the movable member (303, 403) has reached the upper limit of its upshifting displacement range, corresponding to the previous defined second direction, and the cyclist acts again on the corresponding unidirectional operator unit (30) searching for an upper gear, the mechanism described by now would respond with a down-shifting action, opposite to that intended. In order to solve this technical problem we propose further to provide the single-acted ratchet indexing mechanism (13) with a resilient element called transgressor element (9) that yields to the overstrain applied on the single-acting slave-connector (110) thus enabling the acting member (5) to continue moving forward, overcoming the ejecting action range, allowing the lock-element (2) to lock again that same position of the ratchet-gear (1) as it was locked, avoiding an undesirable downshifting.

This transgressor element (9), could be coupled to any of the mechanical components that make up the ratchet indexing mechanism (13), which may be located either assembled in the connection of the drive-element (3) with the acting member (5), as in the connection that exists through the traction element (8) between the ratchet-gear (1) and the movable member (303, 403), as we can see in FIG. 7.

So a short stroke of the single shifting-lever (116, 126) causes a short forward displacement of the acting member (5) within the ejecting action range corresponding to a downshifting movement; while a longer stroke of said unidirectional single shifting-lever (116) causes a long displacement of the acting member (5) corresponding to an up-shifting movement. So that, the acting member (5) movement after the lock-element (2) ejection means a downshifting action when the acting member moves backward; and it means an up-shifting action if the acting member (5) pushes the ratchet-gear (1) causing it a greater displacement than the gap between adjoining teeth of the ratchet-gear (1). This up-shifting action may involve one or more teeth of the ratchet-gear (1), while the downshifting action is always unitary, i.e. only one tooth for every action of the shifting-lever (116).

Other aspect of the present invention shown in FIG. 12 is a unidirectional hydraulic operator unit (30) provided with a single shifting-lever (116) coupling a hydraulic single-acting master connector (32), comprising, in turn, a hydraulic master-cylinder (311) and a hydraulic master-piston (312), integrated into a single handgrip housing with a brake master-connector (40), comprising a hydraulic brake master-cylinder (411) and a hydraulic brake master-piston (412), connected to a hydraulic brake-lever (410) located next to the single shifting-lever (116). So there is a single housed handle unit corresponding to each hand, including the operator levers for one brake and for one derailleur.

OTHER EMBODIMENTS

An alternate hydraulic embodiment of the invention, as we can see in FIG. 14, is a single-acted gear-shifting device (12) as described above driven by a hydraulic unidirectional operator mechanism (15) with only one unidirectional operator unit (30) and a hydraulic single-acting drive circuit (115).

Another alternative hydraulic embodiment for the bicycle single-acted gear shifting device (12) according to the present invention, as we can see in FIG. 4A-4B and FIG. 10, is characterized in that the toothed ratchet-gear (1) is arranged in a non-circular but linear element, able to move in the two opposite directions along its principal longitudinal axis. In addition, the acting

member (5) is integrally performed in a same element with the hydraulic slave-piston (112) belonging to the single-acting slave-connector (110).

A further hydraulic embodiment for the bicycle single-acted gear shifting device (12) according to the present invention, as we can see in FIG. 16, is characterized in that said base member (0) of the ratchet-indexing mechanism (13) is fixed to the bicycle frame but not attached to the derailleur and said ratchet-gear (1) is hydraulically connected to the movable member (303, 403). Said bicycle single-acted gear shifting device (12) comprises a front (10) or rear (20) derailleur and a ratchet indexing mechanism (13) coupled to only one hydraulic single-acting slave-connector (110), including a hydraulic slave-cylinder (111) and slave-piston (112). In this alternative embodiment the transmission assembly (8) which connects the derailleur movable member (303, 403) with the ratchet-gear (1) comprises: a hydraulic transmission master-connector (84), including a hydraulic transmission master-cylinder (840) and hydraulic transmission master-piston (841); a hydraulic transmission slave-connector (85), including a hydraulic transmission slave-cylinder (850) and hydraulic transmission slave-piston (851); and a hydraulic single-acting transmission circuit (86). Therefore, an input displacement in the ratchet-gear (1) is transformed into an output rotation of the movable member (303, 403), resulting in the lateral displacement of the cage-plate (102,202).

In an alternative embodiment of the invention, as we can see in FIG. 17, it is proposed a cable bicycle gear-shifting device (12) comprising a front (10) or rear derailleur (20) attaching a ratchet indexing mechanism (13) with only one cable single-acting slave-connector (120) comprising in turn a cable slave-pulley (121) with a secondary spring (122), driven by a cable unidirectional operator mechanism (15) comprising multiple unidirectional handle operator units (30) connected in parallel, by means of a branched cable single-acting drive circuit (123, 123'), to said bicycle gear-shifting device (12) in order to indistinctly operate it. Each one of the aforementioned operator units (30) usually located on the handlebar comprises a unidirectional single shifting-lever (126), in order to pull the cable, coupling a single-acting master-connector (32) comprising a cable master-pulley (321).

Other aspect of the present alternative cable embodiment according to the invention, as we can see in FIG. 13A and 13B, is a unidirectional cable operator unit (30) with only one operator lever (416), coupling two cable single-acting master connectors (32), one to operate the shifting system and the other one to operate the brake system. The first one consists of a cable master-pulley (321) integrated into a single handgrip housing, and the other one consists of one end of said operator lever (416) acting as a connecting rod for the brake cable (421) which pass through an axial hollow surface of said cable master-pulley (321). Furthermore, said operator lever (416) has two functions depending on the kind of movement the cyclist produces onto the lever: in one hand, operating the bicycle gear-shifting device (12) when the cyclist rotates the operator lever (416) around the axis direction of the cable master-pulley (321), and in the other hand, operating the bicycle brake system when the cyclist pushes the operator lever (416) toward the handgrip housing (as in the conventional bicycle brake levers).

LIST OF FIGURES-REFERENCES

REFERENCE	ELEMENT DESIGNATION
10	Front derailleur
20	Rear derailleur
12	Single-acted gear shifting device
13	Ratchet indexing mechanism
15	Unidirectional operator mechanism
202,102	Cage plate
101,201	Derailleur body
303,403	Movable member
103,104,203	Semi-swing arms
105,205	Main spring
104',203'	Movable member extension
0	Base member
1	Ratchet-gear
2	Lock-element
21	Lock-element extension
211	Lock-element peripheral wedge
212	Lock-element side wedge
3	Drive-element
4	Main shaft
5	Acting member
6	Ejector-element
60	Slip-spring

61	Primary peripheral wedge
62	Secondary side wedge
7	Release-means
8	Transmission assembly
80	Traction element
81	Rack
82	Pinion
83	Adjusting element
84	Hydraulic transmission master-connector
840	Hydraulic transmission master-cylinder
841	Hydraulic transmission master-piston
85	Hydraulic transmission slave-connector
850	Hydraulic transmission slave-cylinder
851	Hydraulic transmission slave-piston
86	Hydraulic transmission circuit
9	Transgressor element
14	Resting means
30	Unidirectional operator units
116	Hydraulic unidirectional single shifting lever
126	Cable unidirectional single shifting lever
32	Single-acting master connector
311	Master cylinder
312	Master piston
321	Cable master pulley
123,123'	Cable single-acting drive circuit
115,115',115''	Hydraulic single-acting drive circuit
110	Hydraulic single-acting slave connector
111	Slave cylinder
112	Slave piston
113	Slave-rack
114	Slave-pinion
120	Cable single-acting slave connector
121	Cable slave pulley
122	Secondary spring
124,124'	Housings
410	Hydraulic brake-lever
411	Hydraulic brake master-cylinder
412	Hydraulic brake master- piston
40	Brake master-connector
416	Operator lever
420	Cable brake-lever
421	Brake Cable

CLAIMS

1) A bicycle single-acted gear shifting device (12) for a chain transmission system that incorporates a multiplicity of chainrings or sprockets in order to obtain different gear ratios, comprising:

- a front (10) or rear (20) derailleur, which comprises, in turn, a floating cage-plate (102, 202) in order to allow for different working positions corresponding to the different gears, a movable member (303, 403) which carries said floating cage-plate (102, 202), and a derailleur body (101, 201) attachable to the bicycle frame and operatively coupled to said movable member (303, 403);

- a main spring (105, 205);

- a secondary spring (122);

- a single-acted ratchet-indexing mechanism (13), to removably define and hold a plurality of predetermined stable working positions of the movable member (303, 403) and consequently of the cage-plate (102, 202), which comprises: a base member (0) arranging a toothed ratchet-gear (1) mechanically connected to said movable member (303, 403), and biased by said main spring (105, 205) to a first direction named backward; a lock-element (2) coupled to said base member (0) in order to lock whichever of the ratchet-gear (1) teeth, blocking the ratchet-gear (1) movement in said first direction; an acting member (5) being able to move forward and backward relative to the ratchet-gear (1), being biased backward to its rest position by the abovementioned secondary spring (122); resting means (14) that limits the acting-member (5) displacement determining the mentioned rest position; a drive-element (3) coupled to the acting member (5) in order to engage the ratchet-gear (1) and move it integrally with the acting member (5); an ejector-element (6) driven by said acting member (5) in order to release the lock-element (2) from its locking position just only at the beginning of each shifting action, that is to say, along the first portion of the complete forward displacement range of the acting member (5), portion called ejecting action range; release-means (7) in order to disengage said drive-element (3) from the ratchet-gear (1) when said acting member (5) returns

to its rest position; and a transmission assembly (8), mechanically connecting the movable member (303, 403) with the ratchet-gear (1), converting the input displacement of the ratchet-gear (1) into an output displacement of the movable member (303, 403) and consequently of the cage-plate (102,202);

-and one only single-acting slave connector (110) coupled to the acting member (5) in order to selectively operate it, and consequently to operate the single-acted ratchet-indexing mechanism (13),

characterized in that said only one single-acting slave-connector (110) comprises a hydraulic slave-cylinder (111) and a hydraulic slave-piston (112) either mechanically coupled or integrally performed in a same element with the acting member (5). Said single-acting slave-connector (110), operated by hydraulic means, moves the acting member (5) due to fluid pressure in the abovementioned forward direction, and in the backward direction, up to its rest position, due to the mentioned secondary spring (122).

2) A bicycle single-acted gear shifting device (12) according to claim 1, characterized in that the single-acted ratchet-indexing mechanism (13) further comprises a main shaft (4) arranged on said base member (0) which is either coupled to the derailleur body (101, 201) or integrally performed in a same element with this latter. Said ratchet-gear (1) is arranged in a complete or portioned toothed wheel, and is able to rotate backward and forward about the main shaft (4) axis, corresponding to the abovementioned first and second directions; and said acting member (5) is supported, as well, by the main shaft (4), and is able to rotate relative to the ratchet-gear (1) due to the action of the single-acting slave connector (110).

3) A bicycle single-acted gear shifting device (12) according to claim 2, characterized in that said single-acting slave-connector (110) is mechanically coupled to the acting member (5) by means of a slave-rack (113) which turns a meshed slave-pinion (114). Said slave-rack (113) is joined to the slave-piston (112) and said slave-pinion (114) is integrally coupled to the acting member (5).

4) A bicycle single-acted gear shifting device (12) according to any one of claims 2 to 3, characterized in that the lock-element (2) has a lock-element

extension (21) provided with two wedged contact surfaces called lock-element peripheral wedge (211) and lock-element side wedge (212). Said lock-element peripheral wedge (211) is pushed by the ejector element (6) in order to release the lock-element (2) from a locking position when the acting member (5) moves forward just at the beginning of each shifting action, which means in the first portion of the complete displacement range of the acting member (5). And said lock-element side wedge (212) laterally displaces the ejector element (6) when the acting member (5) moves backward.

5) A bicycle single-acted gear shifting device (12) according to claim 4, characterized in that the ejector-element (6) rotates integrally with the acting member (5) but being jointed to it, thus enabling the ejector-element (6) to orthogonally pivot relative to the main shaft (4) axis, against a slip-spring (60) action, in order to laterally displace it from its natural ejecting position.

6) A bicycle single-acted gear shifting device (12) according to any one of claims 4 to 5, characterized in that the ejector-element (6) contains two wedged contact surfaces, one peripheral disposed forming a primary peripheral wedge (61), and the other one laterally disposed forming a secondary side wedge (62). Said primary peripheral wedge (61) push the lock-element peripheral wedge (211) in order to eject the lock-element (2) from its locking position, when the acting member (5) moves forward. But when the acting member (5) moves backward and the lock-element (2) is locking a ratchet-gear (1) tooth, said secondary side wedge (62) is pushed by the lock-element side wedge (212) in order to avoid the natural ejecting position of the ejector-element (6).

7) A bicycle single-acted gear shifting device (12) according to claim 1, characterized in that the transmission assembly (8) comprises an adjusting-element (83) to adjust the lag phase between the position set by the ratchet-gear (1) teeth and the movable member (303, 403) position.

8) A bicycle single-acted gear shifting device (12) according to any one of claims 2 to 7, characterized in that the transmission assembly (8) comprises a traction element (80), to operatively couple the ratchet-gear (1) with the movable member (303, 403), which comprises a rack (81) and pinion (82).

Said pinion (82) is integrally coupled to the ratchet-gear (1); and said rack (81) is jointed to the movable member (303, 403). Therefore, an input angular displacement in the ratchet-gear (1) is transformed into a linear movement in said traction element (8), and this, in turn, into an output rotation of the movable member (303, 403), resulting in the lateral displacement of the cage-plate (102,202).

9) A bicycle single-acted gear shifting device (12) according to any one of claims 1 to 7, characterized in that the transmission assembly (8) comprises: a hydraulic transmission master-connector (84), including a hydraulic transmission master-cylinder (840) and hydraulic transmission master-piston (841); a hydraulic transmission slave-connector (85), including a hydraulic transmission slave-cylinder (850) and hydraulic transmission slave-piston (851); and a hydraulic single-acting transmission circuit (86) connecting said hydraulic transmission master-connector (84) with said hydraulic transmission slave-connector (85).

10) A bicycle single-acted gear shifting device (12) according to any one of claims 1 to 9, characterized in that the single-acted ratchet-indexing mechanism (13) further comprises a transgressor element (9) that yields to the overstrain applied on the single-acting slave-connector (110) when the movable member (303, 403) has reached the upper limit of its upshifting displacement range, and the cyclist acts again on the corresponding unidirectional operator unit (30) searching for an upper gear; and thus enabling the acting member (5) to continue moving forward, overcoming the ejecting action range, allowing the lock-element (2) to lock again that same position of the ratchet-gear (1) as it was locked, avoiding an undesirable downshifting.

11) A bicycle single-acted gear shifting device (12) according to claim 10, characterized in that the transgressor element (9) is disposed connecting the ratchet-gear (1) with the movable member (303, 403), forming part of the transmission assembly (8).

12) A bicycle single-acted gear shifting device (12) according to claim 10, characterized in that the transgressor element (9) is disposed connecting the drive-element (3) with the acting member (5).

13) A bicycle single-acted gear shifting device (12) according to claim 1, characterized in that said toothed ratchet-gear (1) is arranged in a linear element, able to move in the two opposite directions along its principal longitudinal axis; said ejector-element (6) is jointed to the acting member (5); and said acting member (5) is integrally performed in the same element with the hydraulic slave-piston (112) and is able to longitudinally move relative to the ratchet-gear (1) due to the action of the hydraulic means that operates the only single-acting slave-connector (110).

14) A unidirectional operator mechanism (15), to operate a bicycle single-acted gear shifting device (12), this latter comprising a front (10) or rear (20) derailleur that comprises, in turn, a floating cage-plate (102, 202), a movable member (303, 403) which carries said floating cage-plate (102, 202), and a derailleur body (101, 201) attachable to the bicycle frame and operatively coupled to said movable member (303, 403); a single-acted ratchet-indexing mechanism (13) to removably define and hold a plurality of predetermined stable working positions of the movable member (303, 403) and only one single-acting slave connector (110) coupled to the single-acted ratchet indexing mechanism (13) in order to selectively operate it;

comprising multiple unidirectional handle operator units (30) and a single-acting drive circuit (115, 123) linking the unidirectional handle operator units (30) with the one only single-acting slave connector (110, 120),

characterized in that each unidirectional handle operator unit (30) comprises only one unidirectional single shifting-lever (116, 126) or button coupling a single-acting master connector (32), and said single-acting drive circuit (115, 123) is branched in order to mechanically connect in parallel each one of the single-acting master connectors (32) with the above mentioned single-acting slave connector (110, 120) to indistinctly and selectively operate it. Said unidirectional single shifting-lever (116, 126) can be manually operated only in one direction, in order to transmit the action to the single-acting drive circuit (115, 123), so that a short stroke of the single shifting-lever (116, 126) causes a downshifting movement in the single-acted gear shifting device (12), while a longer stroke of said single shifting-lever (116, 126) causes an up-shifting movement in the single-acted gear shifting device (12).

15) A unidirectional operator mechanism (15) to operate a bicycle single-acted gear shifting device (12) according to claim 14, characterized in that the single-acting master connector (32) comprises a hydraulic master-cylinder (311) and a hydraulic master-piston (312) so that a unidirectional movement of the single shifting-lever (116) moves the master-piston (312) within the master-cylinder (311) and therefore pushes hydraulic fluid into the hydraulic branched single-acting drive circuit (115), which transmits the action, in turn, to a hydraulic single-acting slave-connector (110).

16) A unidirectional operator mechanism (15) to operate a bicycle single-acted gear shifting device (12) according to claim 14, characterized in that said single-acting drive circuit (123, 123') is arranged by means of a flexible cable with their corresponding housings (124, 124'), and the single-acting master-connector (32) comprises a cable master-pulley (321), so that a unidirectional movement of the single shifting-lever (126) moves the cable master-pulley (321) and therefore pulls the cable single-acting drive circuit (123,123'), which transmits the action to a cable single-acting slave-connector (120) by means of a cable slave-pulley (121) or an articulated connecting rod.

17) A unidirectional operator mechanism (15) to operate a bicycle single-acted gear shifting device (12) according to claim 16, characterized in that the unidirectional operator unit (30) comprises only one operator lever (416) coupling two cable single-acting master connectors (32) integrated into a single handgrip housing, one of them consisting of a cable master-pulley (321), and the other one consisting of one end of said operator lever (416) acting as a connecting rod for the brake cable (421) which pass through an axial hollow surface of said cable master-pulley (321). Therefore, said operator lever (416) has two functions depending on the kind of movement the cyclist produces onto the lever: in one hand, operating the bicycle gear-shifting system when the cyclist rotates the operator lever (416) around the axis direction of the cable master-pulley (321), and in the other hand, operating the bicycle brake system when the cyclist pushes the operator lever (416) toward the handgrip housing.

18) A unidirectional operator mechanism (15) to operate a bicycle single-acted gear shifting device (12) according to any one of claims 14 to 17, characterized in that there are two handle unidirectional operator units (30) located, one of them, on the extension bars corresponding to the position of time trial, and the other one in the natural end of the basebar.

19) A unidirectional operator mechanism (15), to operate a bicycle single-acted gear shifting device (12), this latter comprising a front (10) or rear (20) derailleur that comprises, in turn, a floating cage-plate (102, 202), a movable member (303, 403) which carries said floating cage-plate (102, 202), and a derailleur body (101, 201) attachable to the bicycle frame and operatively coupled to said movable member (303, 403); a single-acted ratchet-indexing mechanism (13) to removably define and hold a plurality of predetermined stable working positions of the movable member (303, 403) and only one hydraulic single-acting slave connector (110) coupled to the single-acted ratchet indexing mechanism (13) in order to selectively operate it;

comprising only one handle operator unit (30) and a single-acting drive circuit (115) linking said unidirectional handle operator unit (30) with the only one hydraulic single-acting slave connector (110),

characterized in that the unidirectional operator unit (30) comprises only one unidirectional single shifting-lever (116) coupling a hydraulic single-acting master connector (32) which is integrated into a single handgrip housing with a brake master-connector (40), comprising, in turn, a hydraulic brake master-cylinder (411) and hydraulic brake master-piston (412), connected to a hydraulic brake-lever (410) to operate the brake system, which is located next to the single shifting-lever (116).

FIGURE 1:

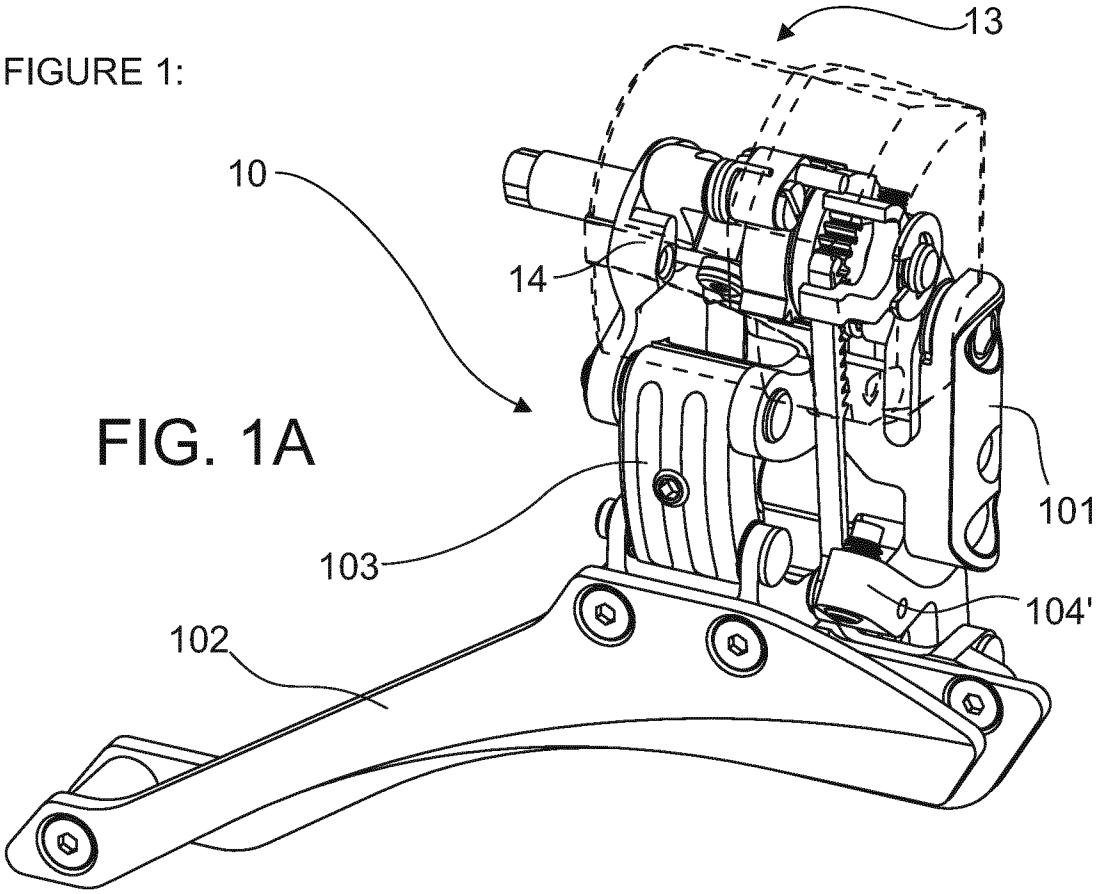

FIG. 1A

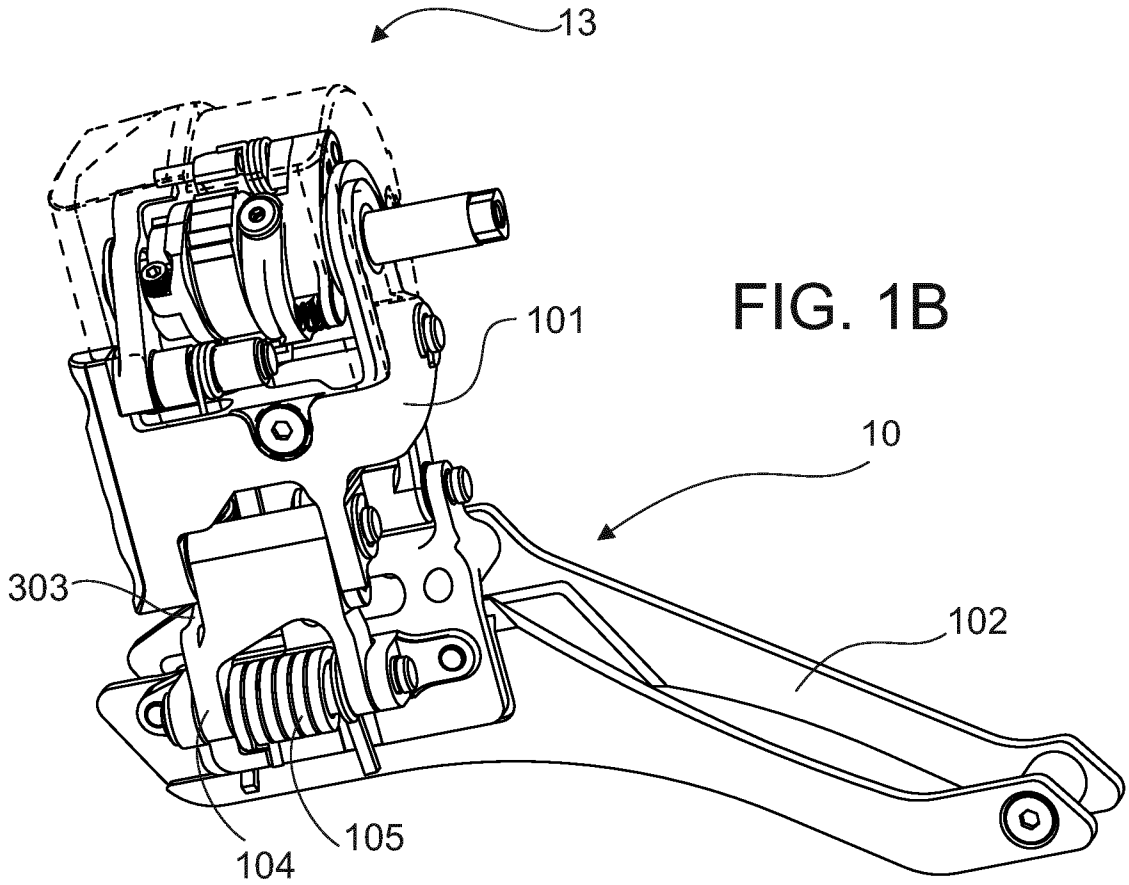

FIG. 1B

FIGURE 2:

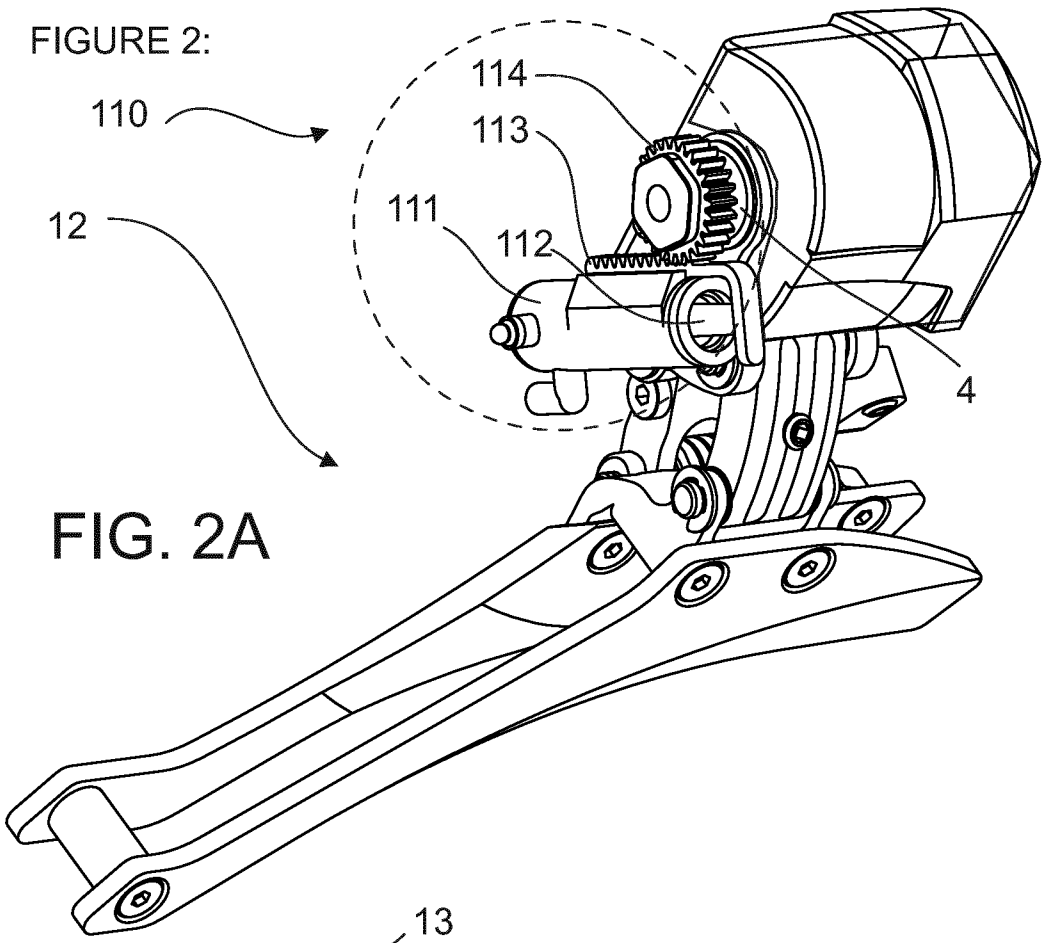

FIG. 2A

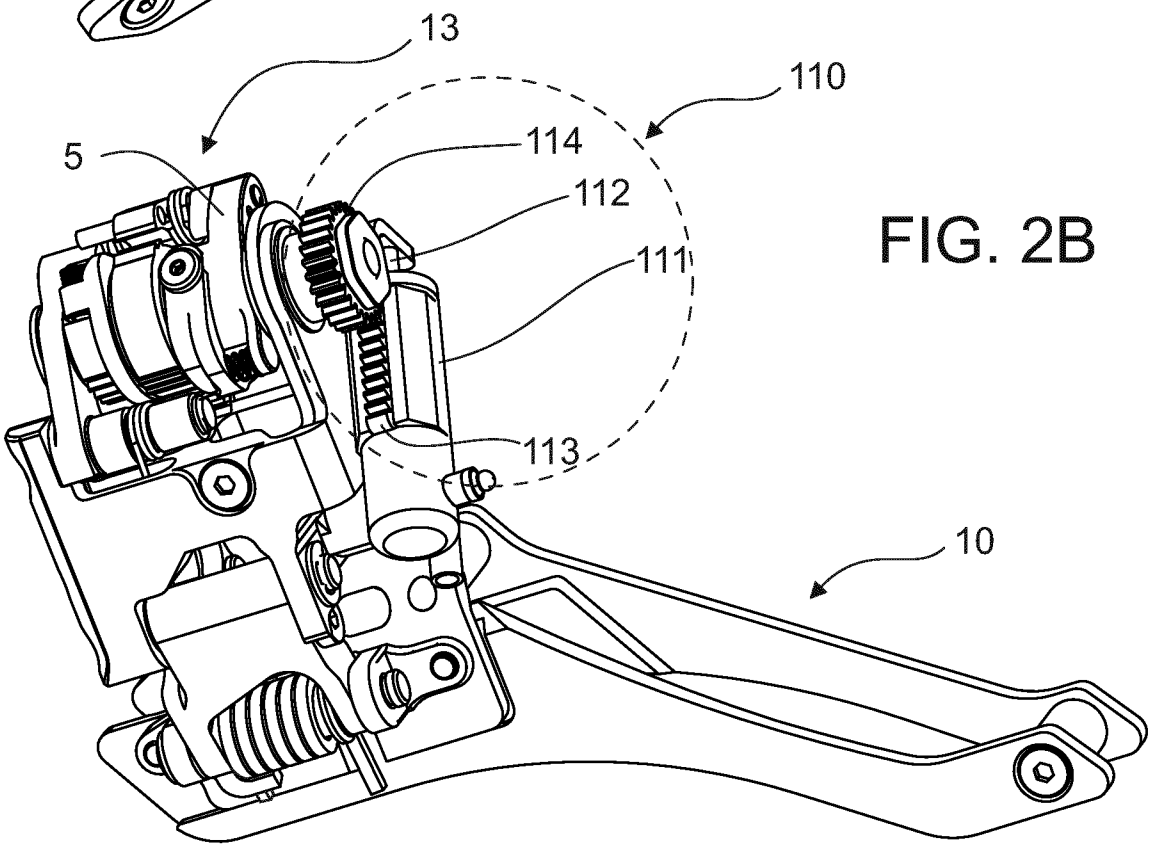

FIG. 2B

FIGURE 3:

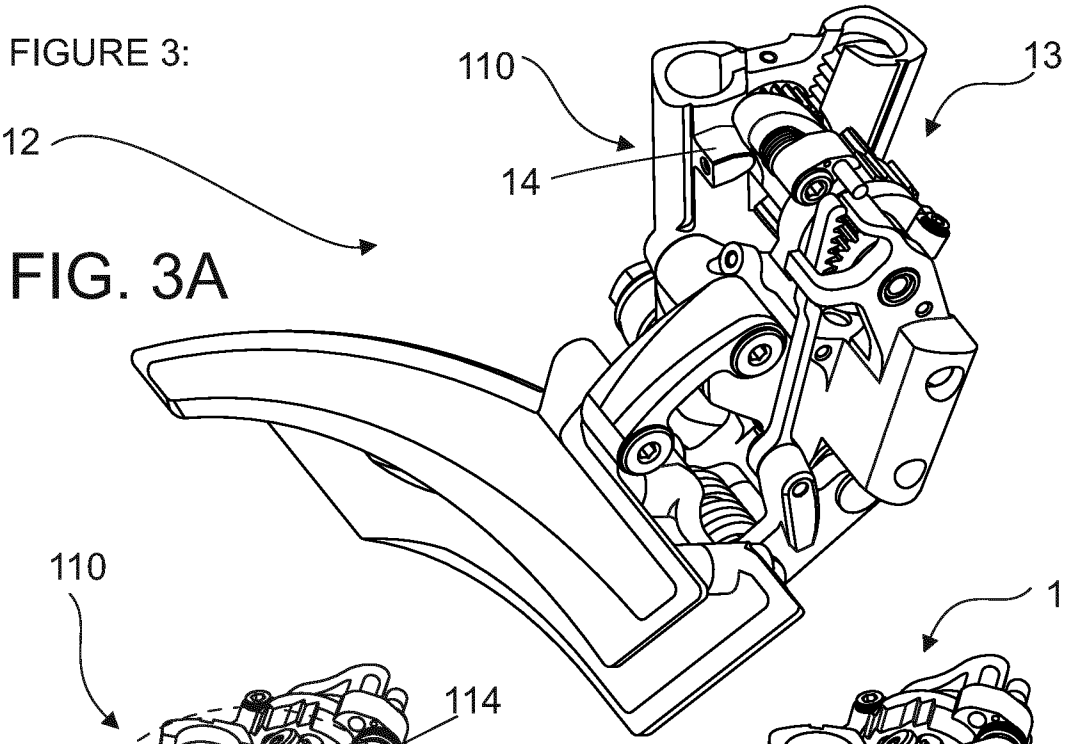

FIG. 3A

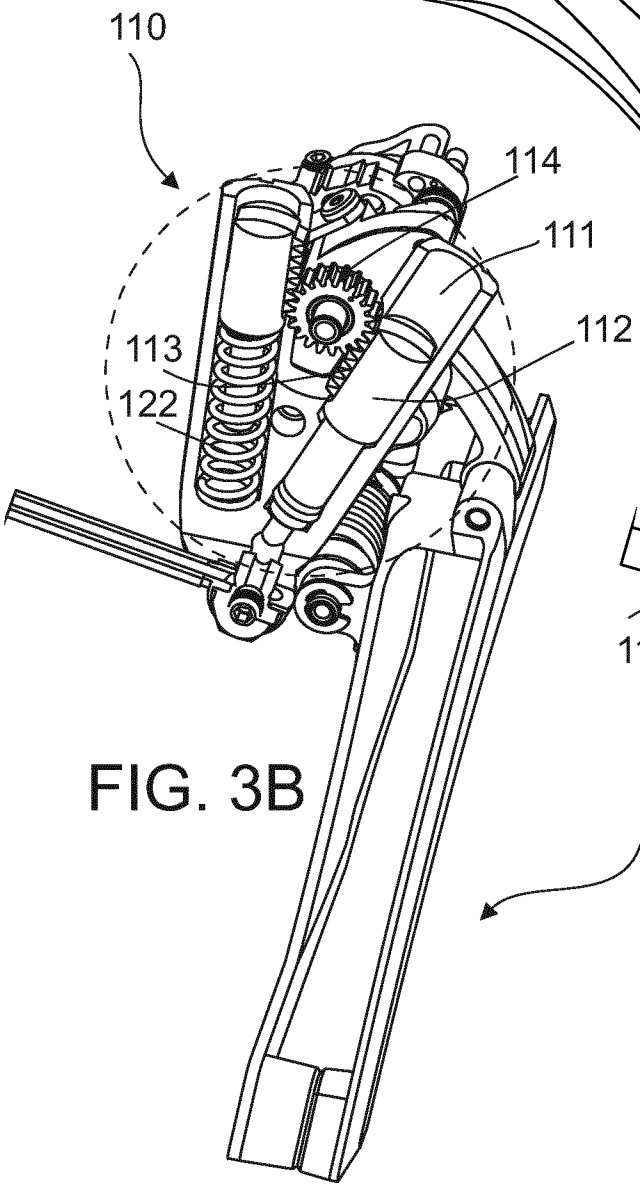

FIG. 3B

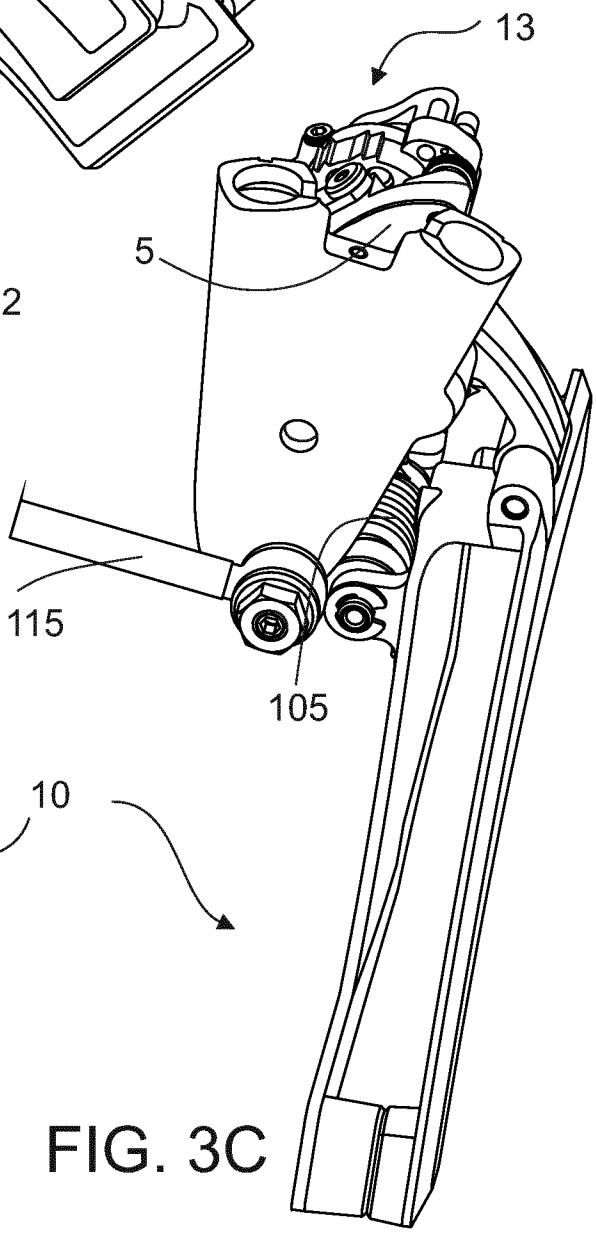

FIG. 3C

FIGURE 4:

FIG. 4A

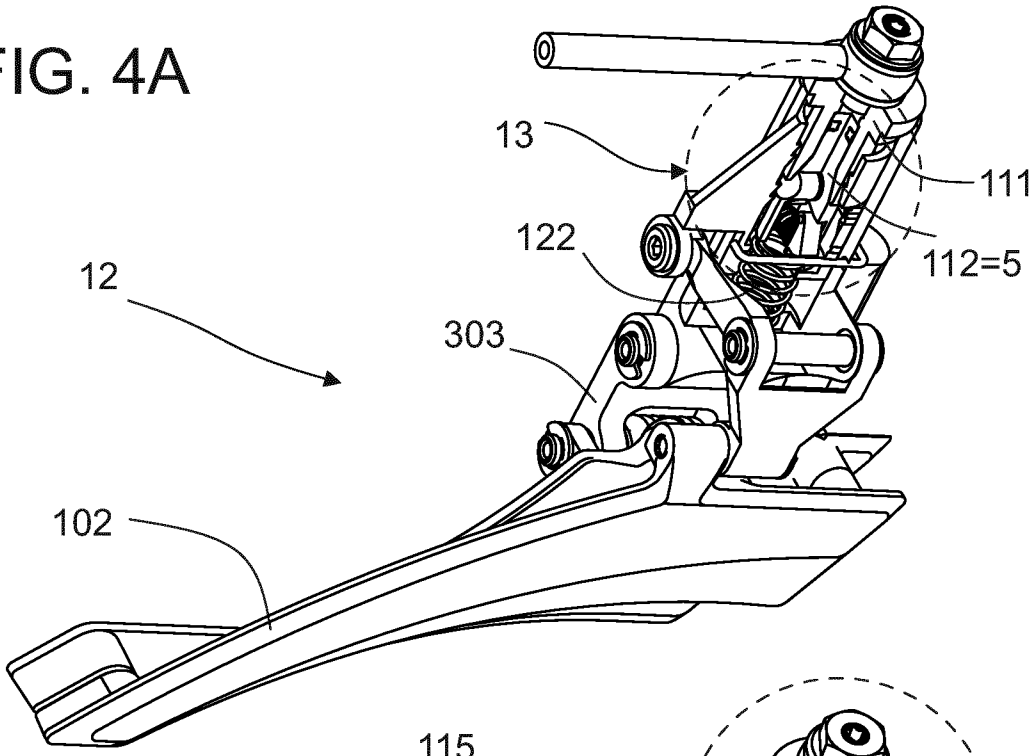

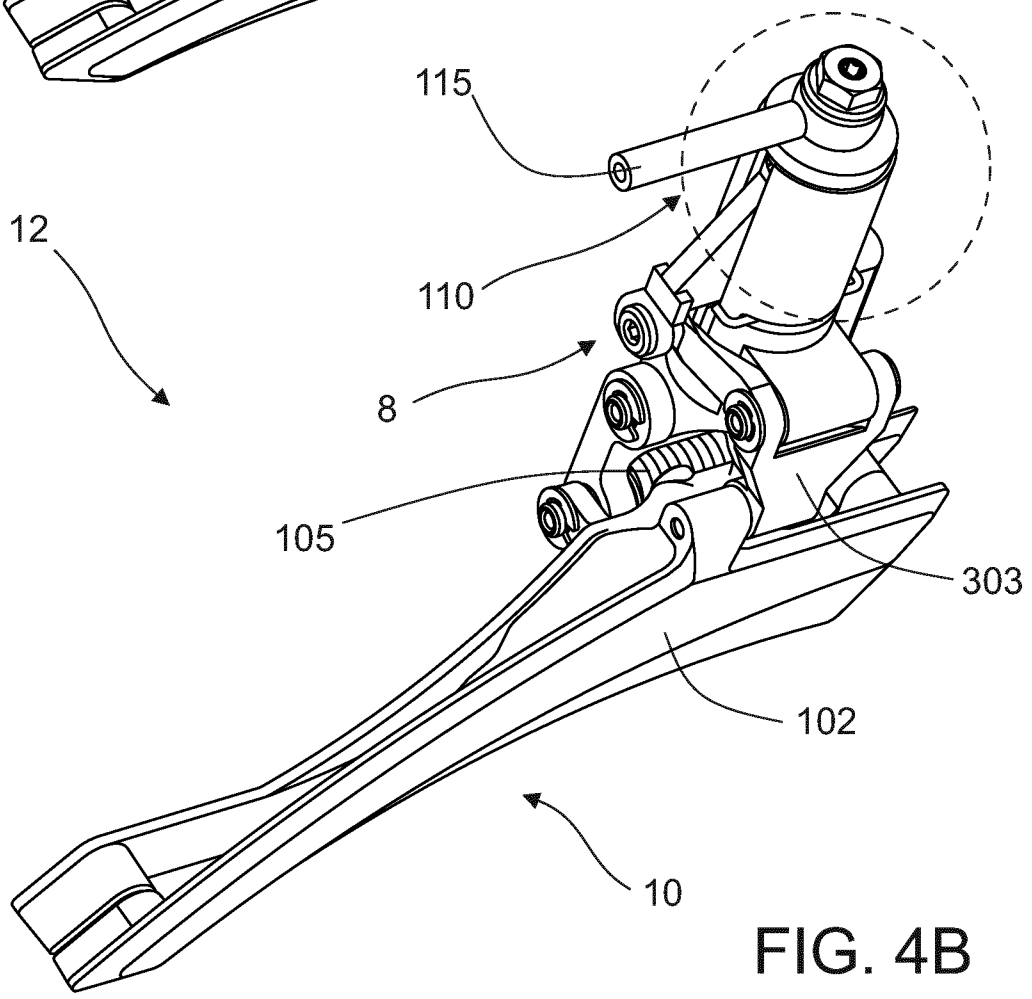

FIG. 4B

FIGURE 5:

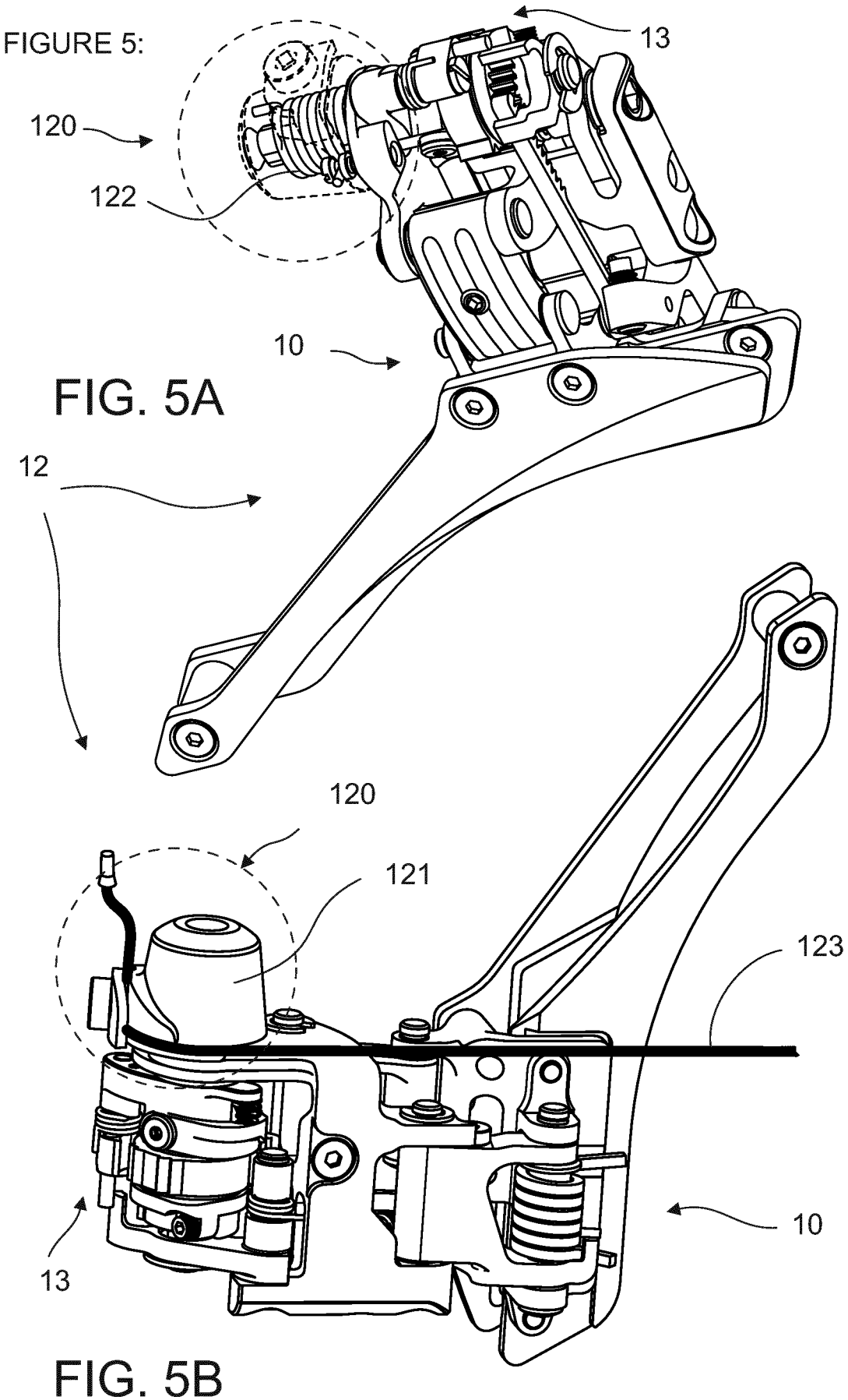

FIG. 5A

FIG. 5B

FIGURE 6:

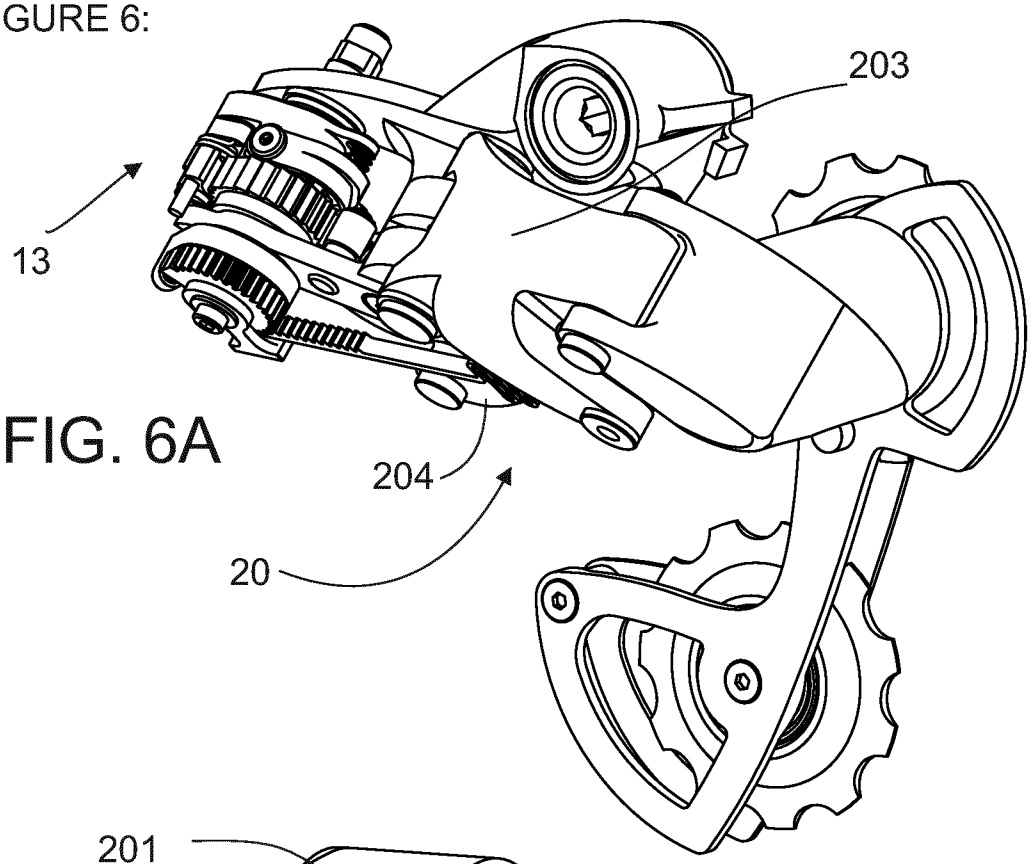

FIG. 6A

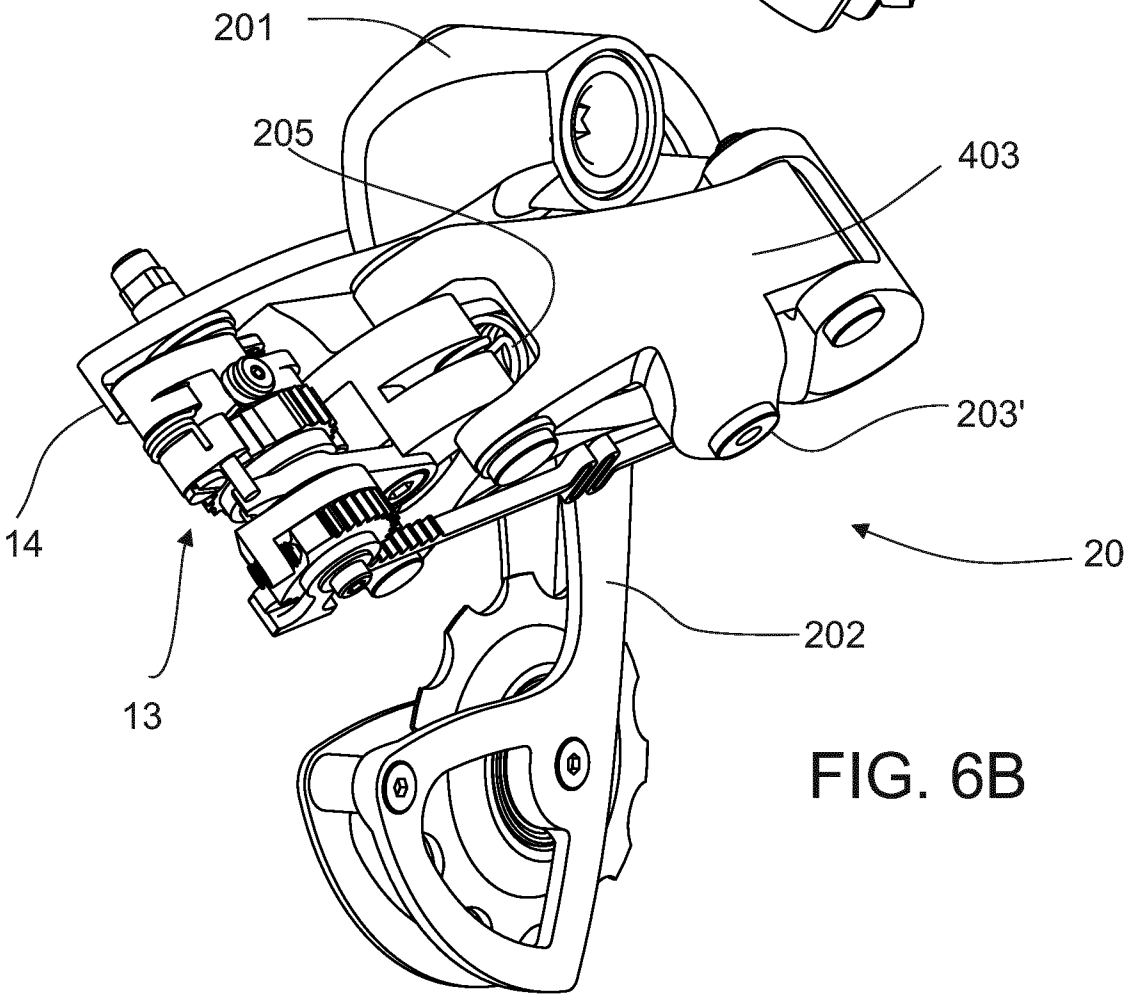

FIG. 6B

FIGURE 7:

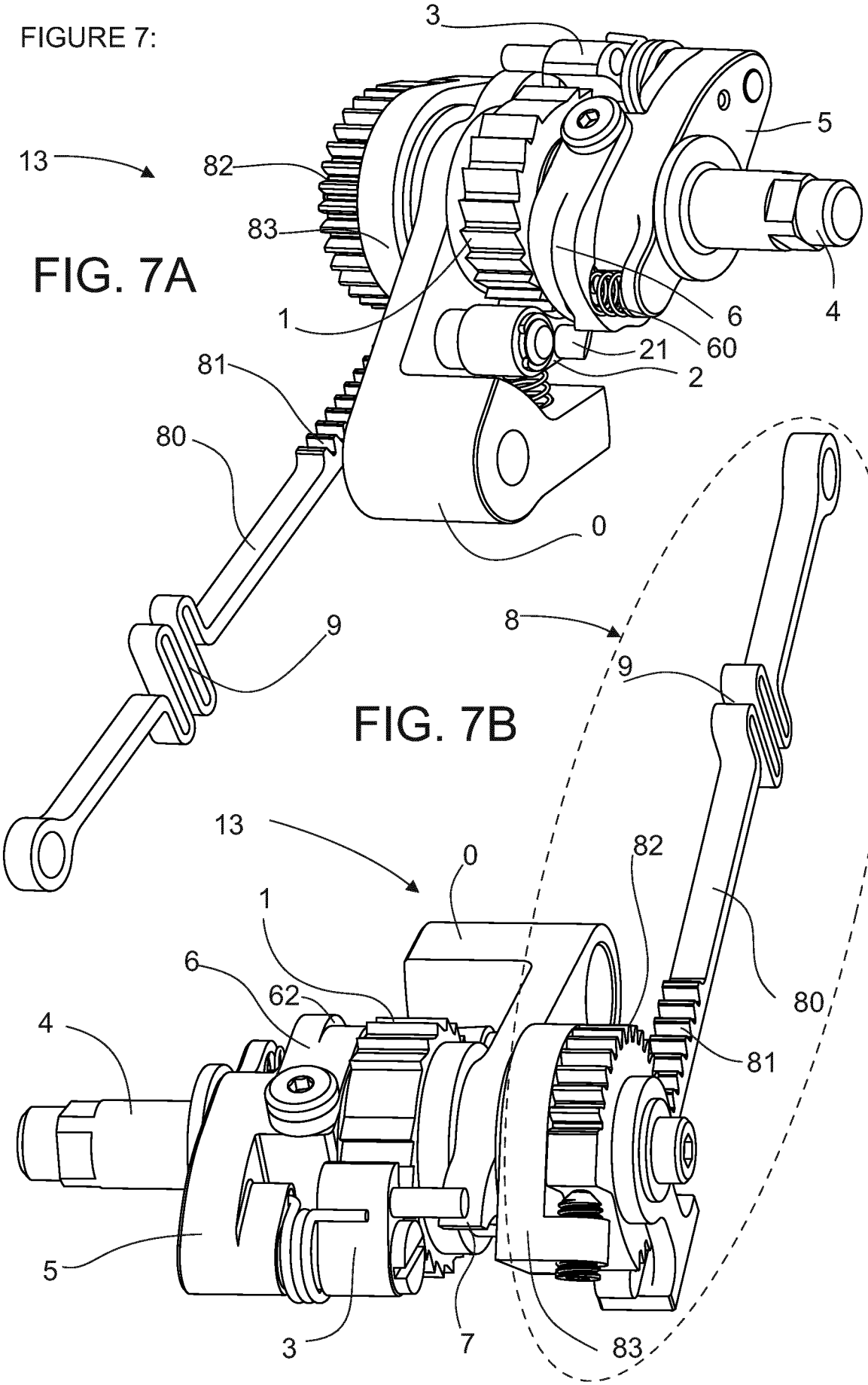

FIG. 7A

FIG. 7B

FIGURE 8

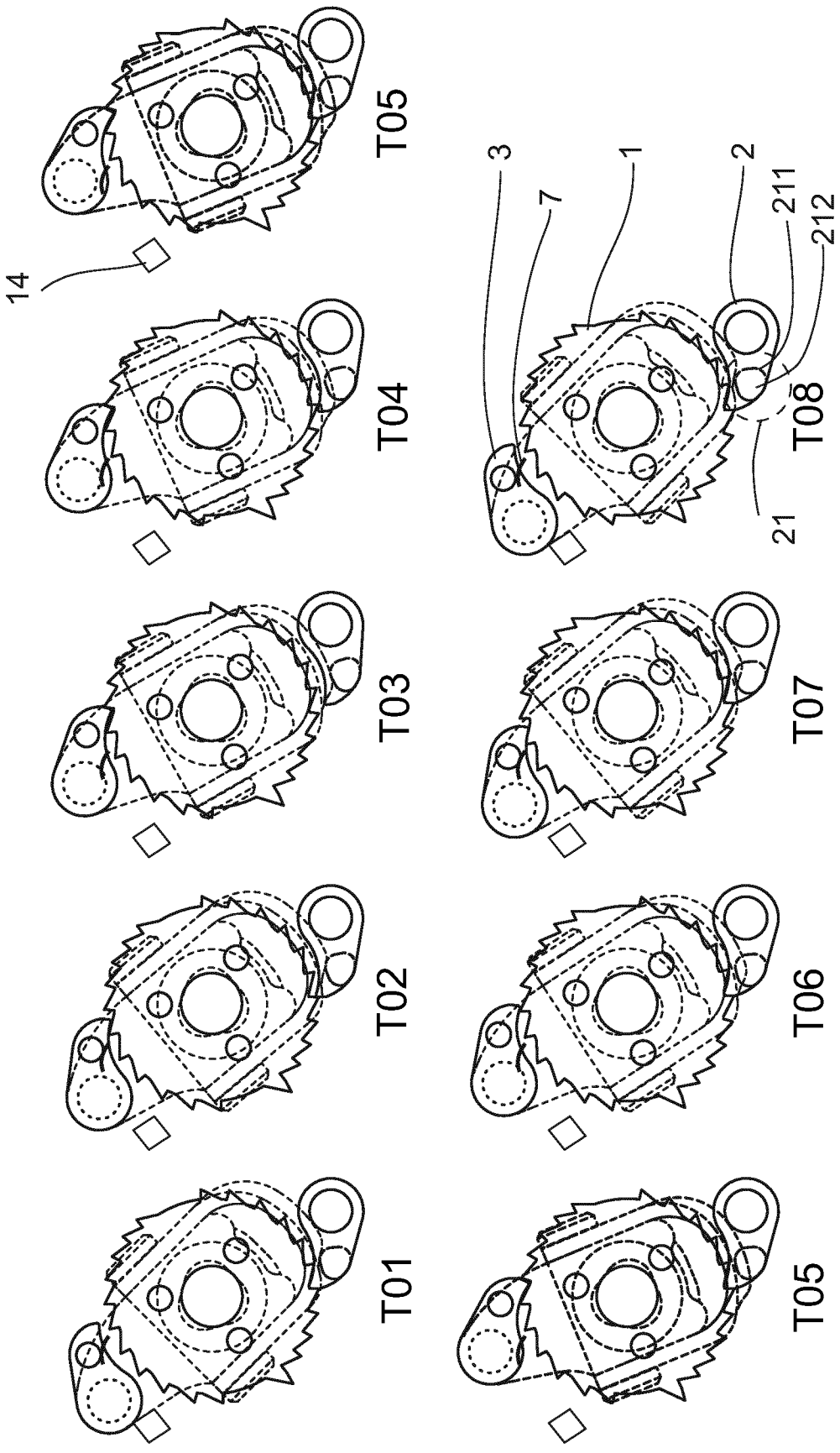

FIGURE 9

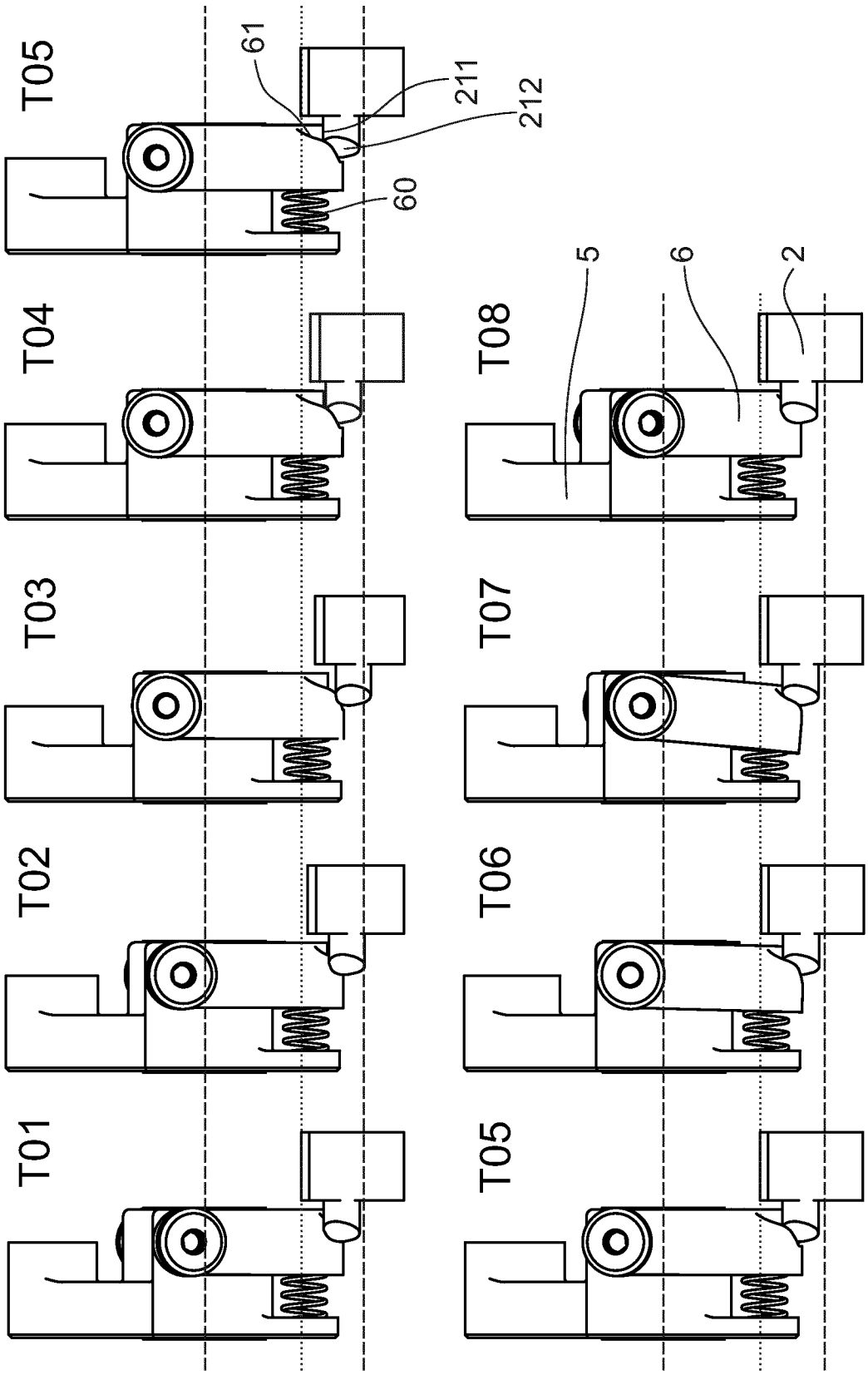

FIGURE 10

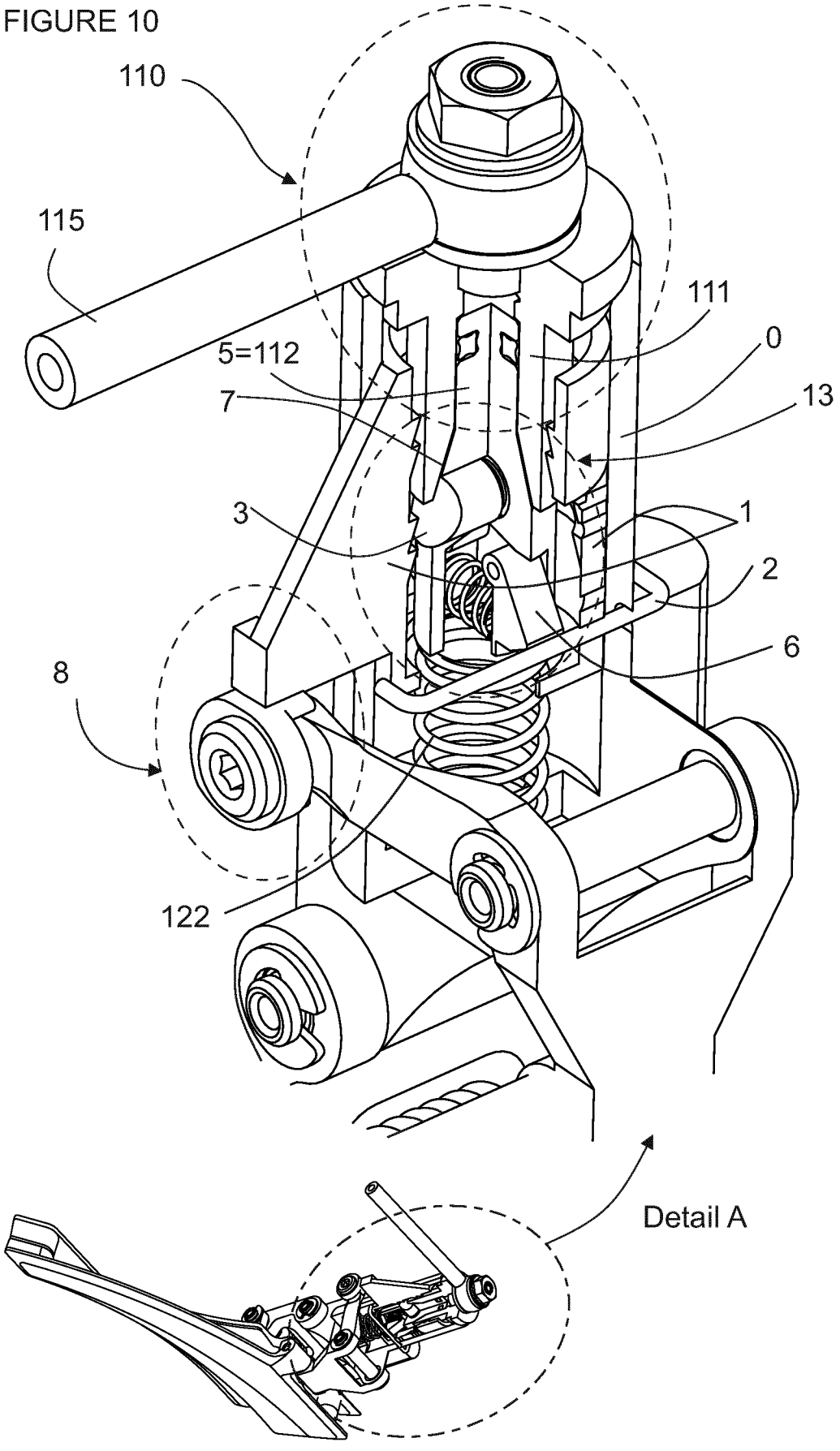

FIGURE 11

FIG. 11A

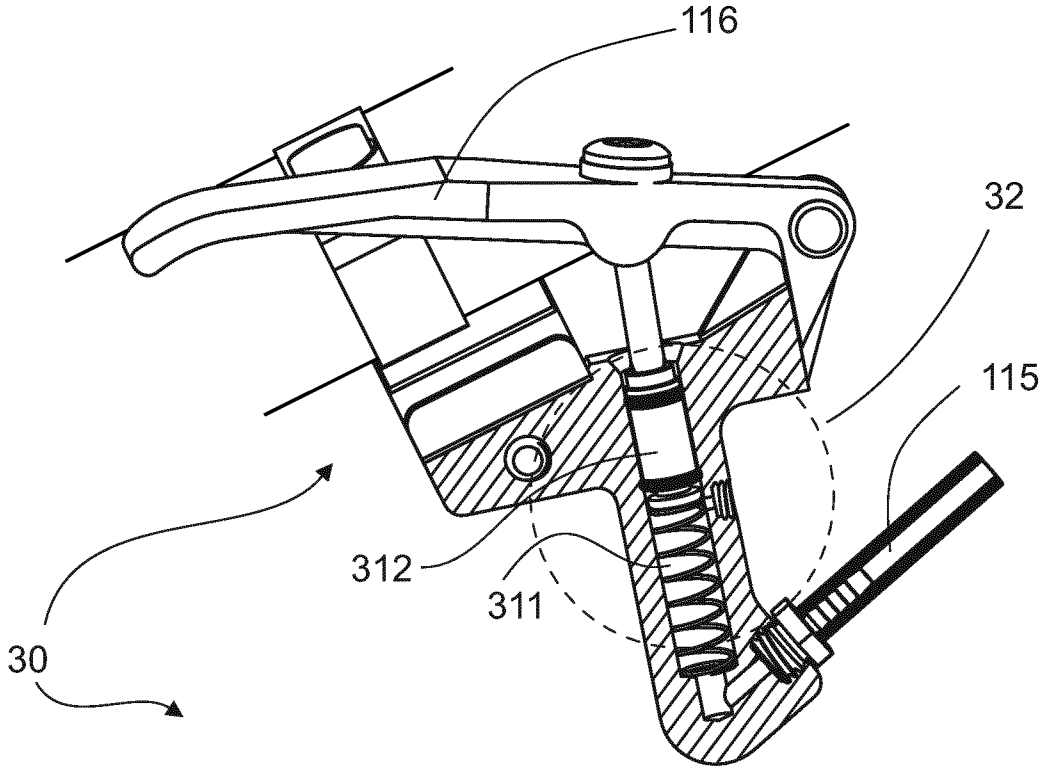

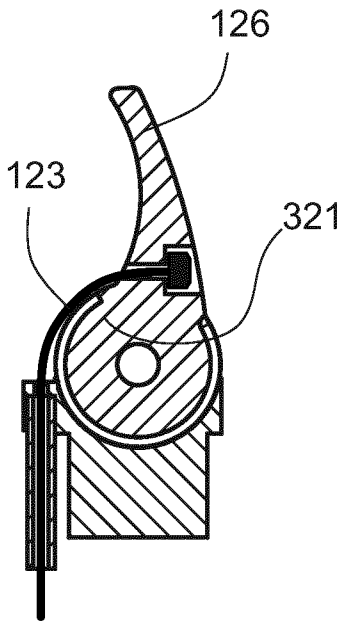

FIG. 11B

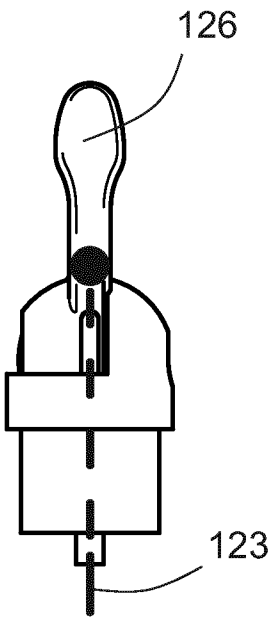

FIG. 11C

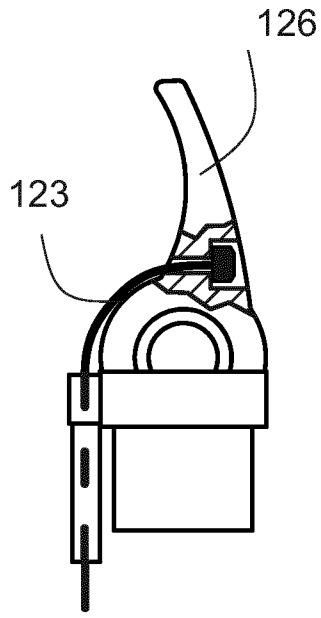

FIG.11D

FIGURE 12:

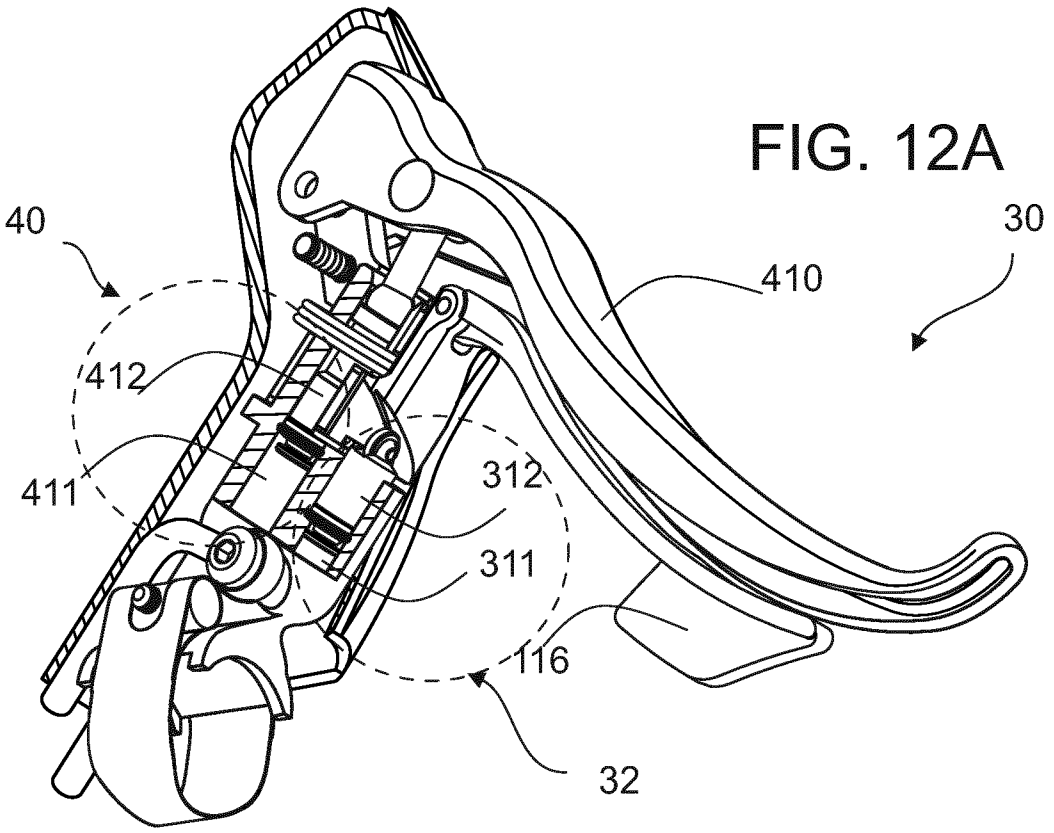

FIG. 12A

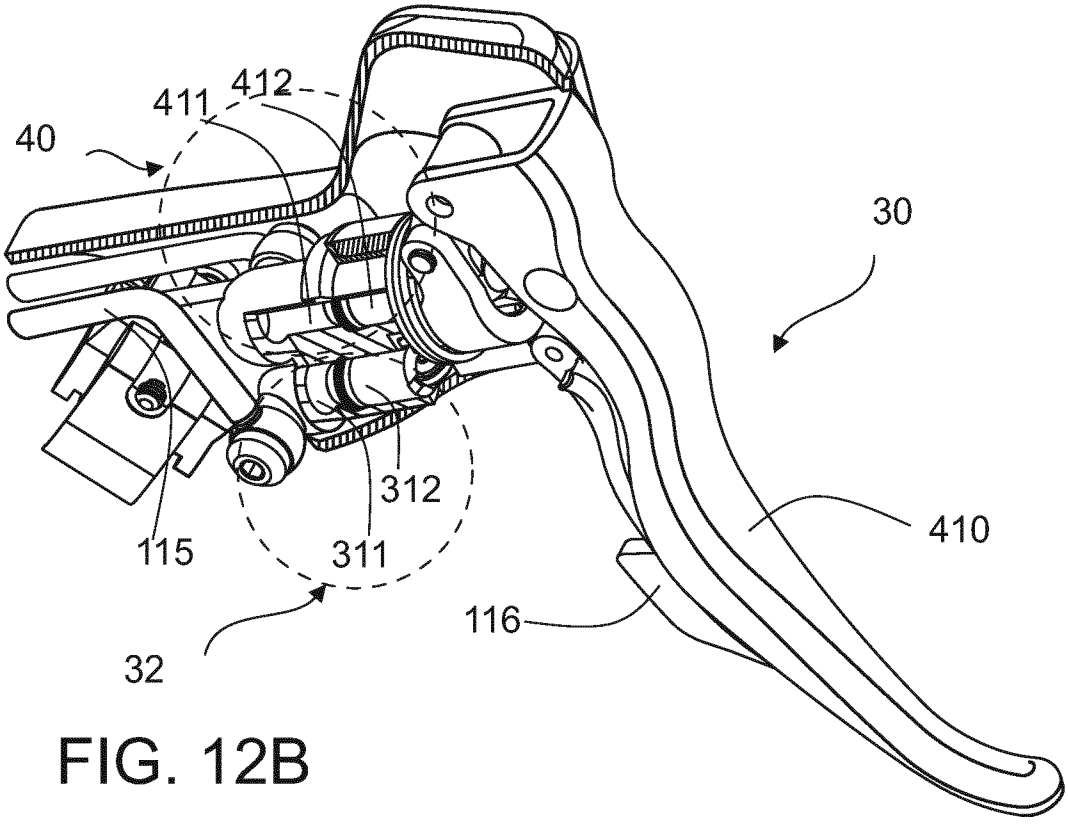

FIG. 12B

FIGURE 13:

FIG. 13A

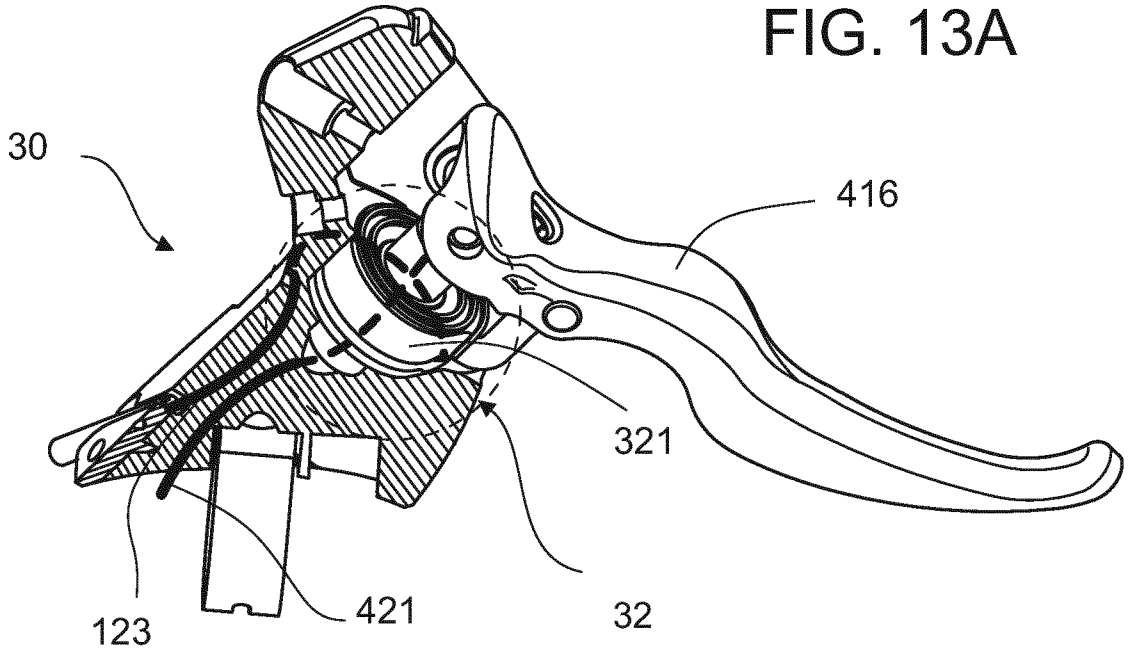

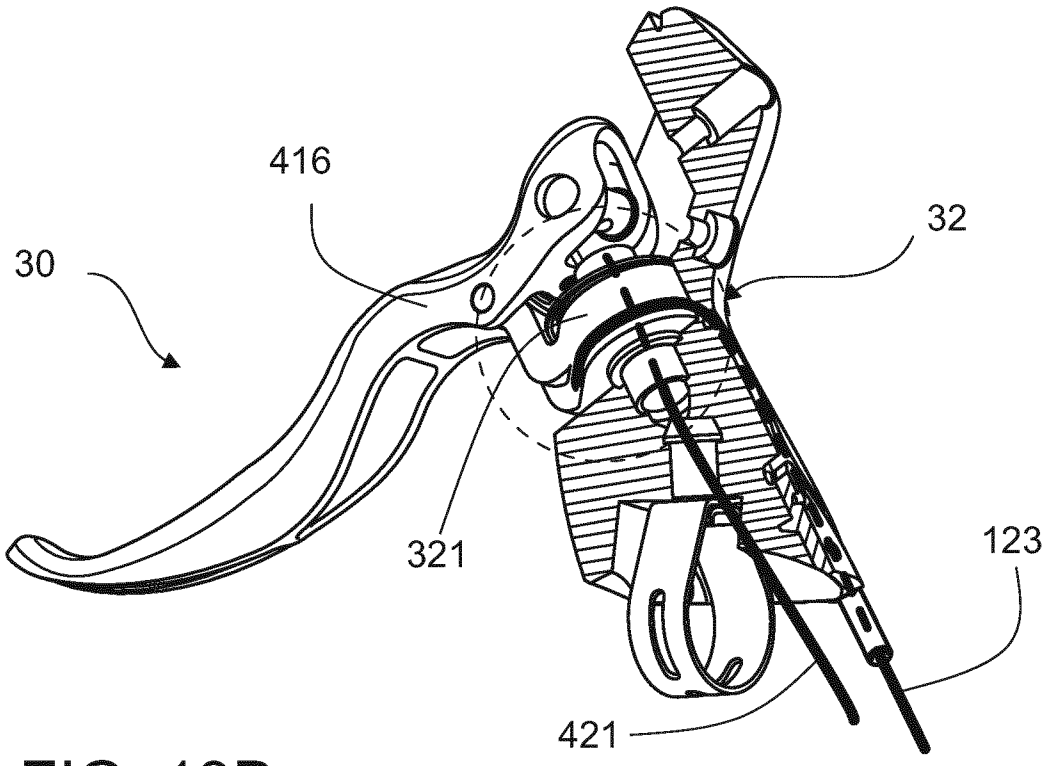

FIG. 13B

FIGURE 14:

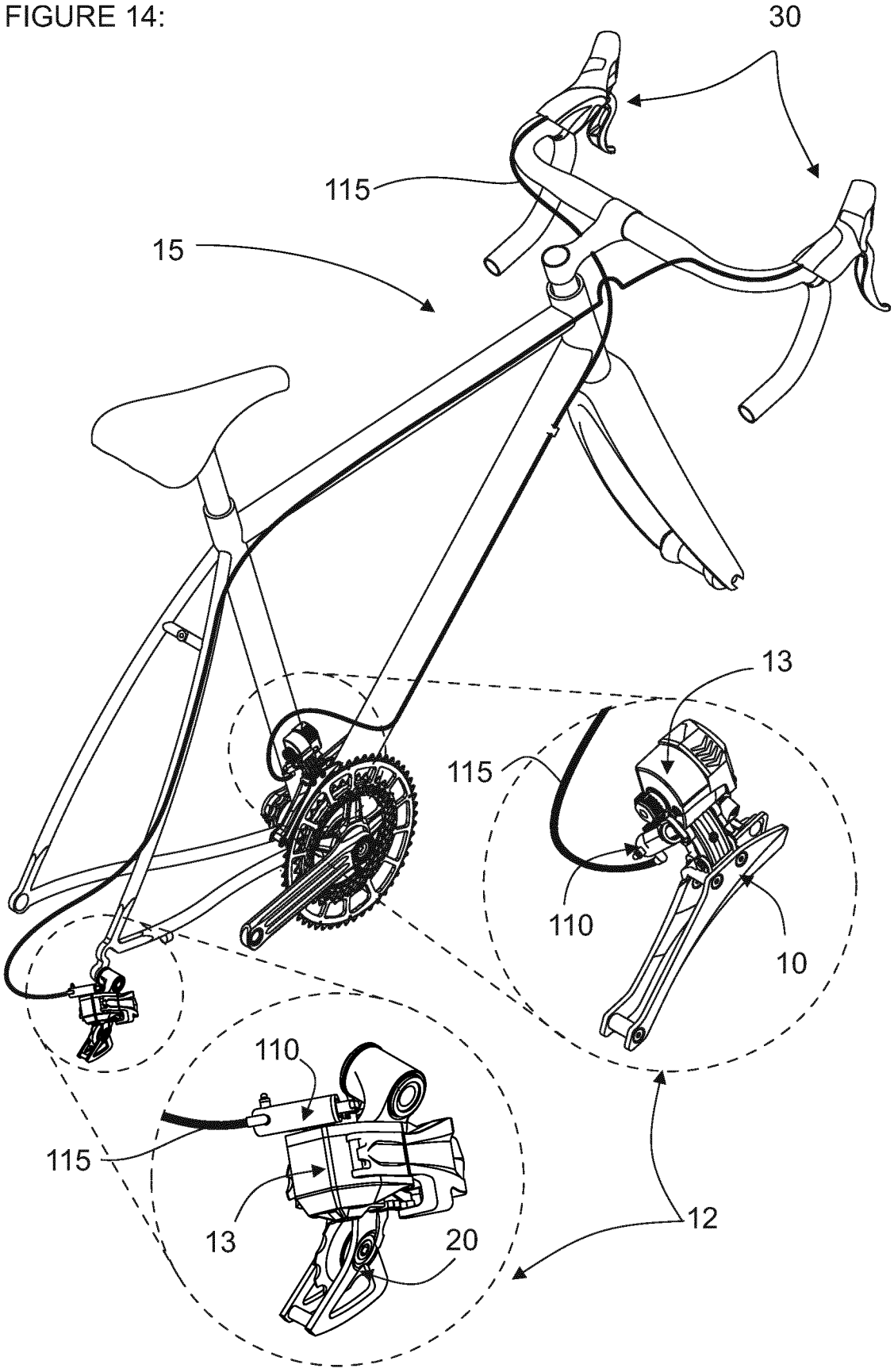

FIGURE 15:

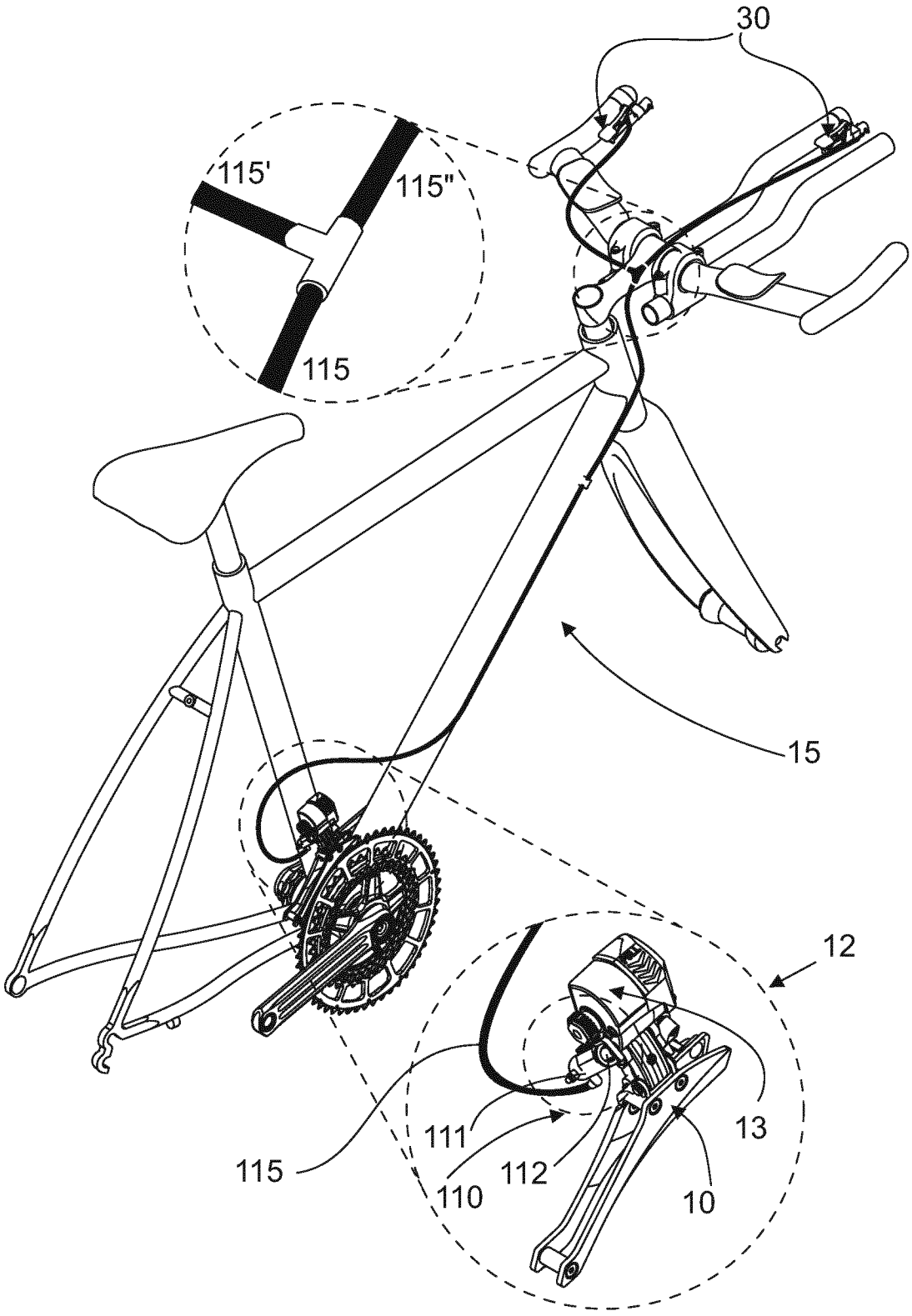

FIGURE 16:

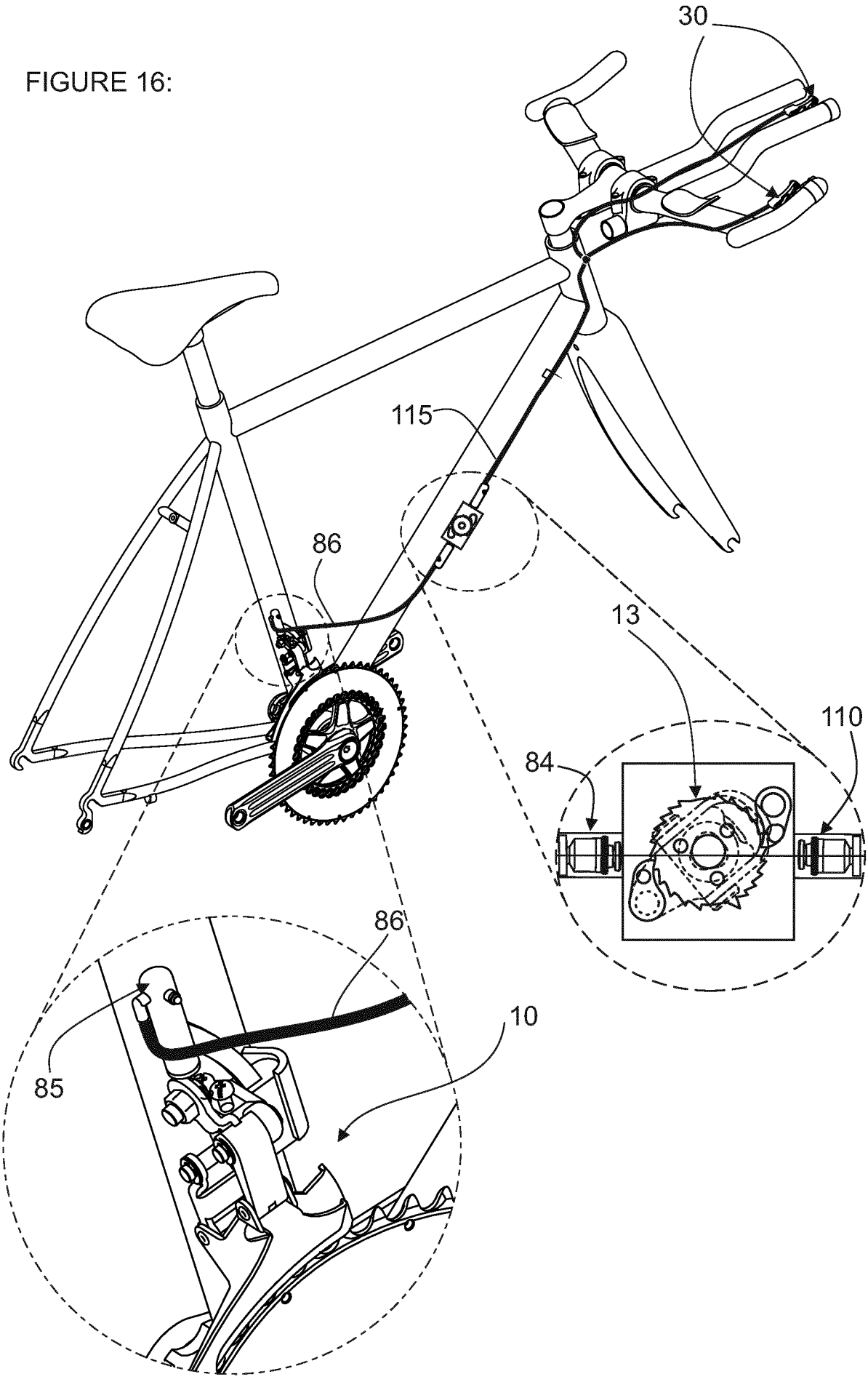

FIGURE 17:

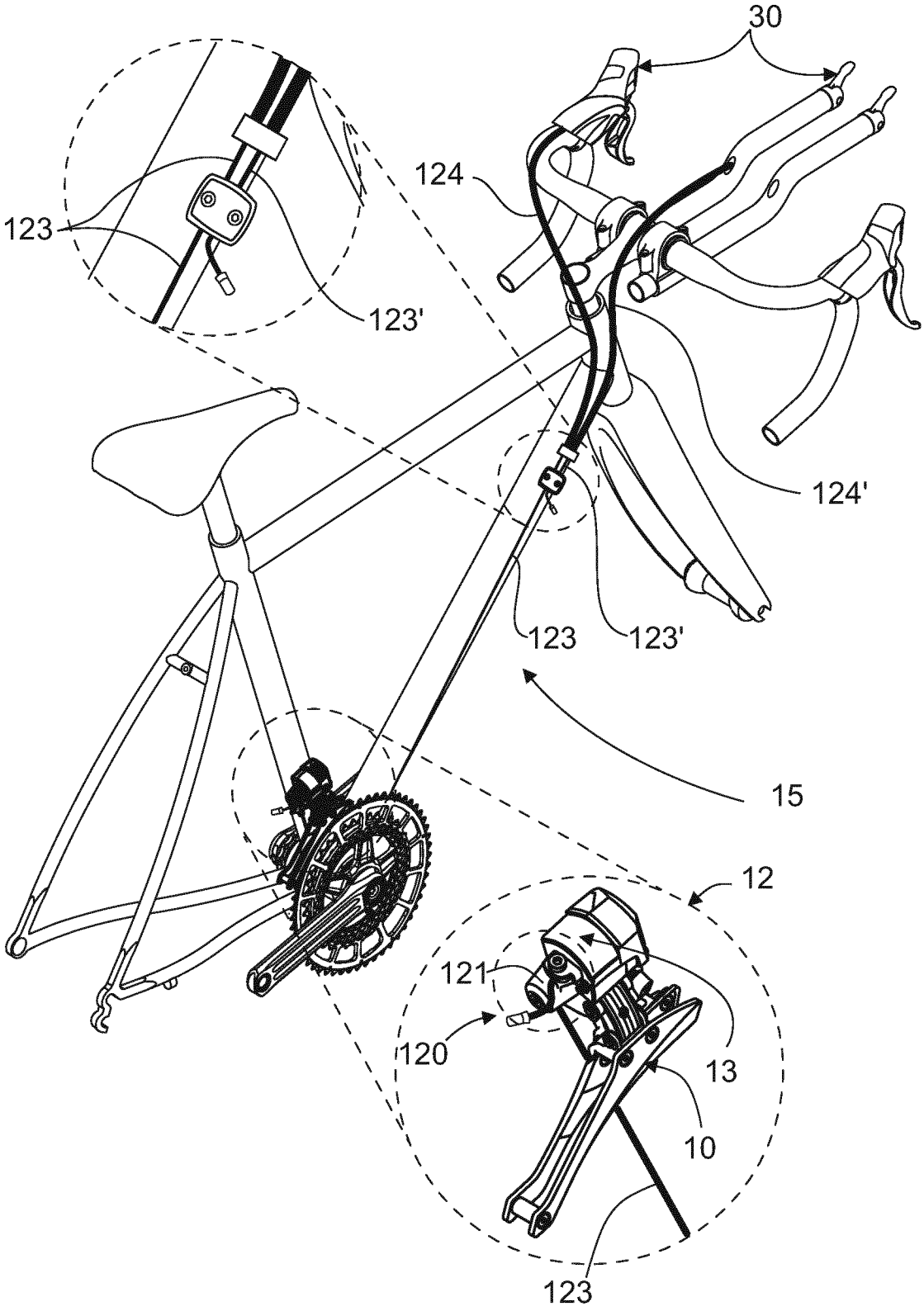

INTERNATIONAL SEARCH REPORT

International application No
PCT/EP2013/051575

A. CLASSIFICATION OF SUBJECT MATTER
INV. B62M25/04 B62M9/122 B62M25/08
ADD.

According to International Patent Classification (IPC) or to both national classification and IPC

B. FIELDS SEARCHED

Minimum documentation searched (classification system followed by classification symbols)
B62M

Documentation searched other than minimum documentation to the extent that such documents are included in the fields searched

Electronic data base consulted during the international search (name of data base and, where practicable, search terms used)
EPO-Internal, WPI Data

C. DOCUMENTS CONSIDERED TO BE RELEVANT

Category*	Citation of document, with indication, where appropriate, of the relevant passages	Relevant to claim No.
Y	DE 195 14 267 A1 (BORRIES HORST VON [DE]) 17 October 1996 (1996-10-17) cited in the application	14,19
A	column 5 - column 6 figure 3	1

Y	US 4 887 990 A (BONNARD RENE [FR] ET AL) 19 December 1989 (1989-12-19)	14,19
A	column 4, paragraph 45 - paragraph 65 column 5, line 1 - line 5 figures 1-3,18	1

A	DE 103 46 104 A1 (GEHRT VOLKER [DE]) 12 May 2005 (2005-05-12) paragraph [0011] - paragraph [0016]; figure 1	1,14,19

	-/--	

[X] Further documents are listed in the continuation of Box C.

[X] See patent family annex.

* Special categories of cited documents :

"A" document defining the general state of the art which is not considered to be of particular relevance

"E" earlier application or patent but published on or after the international filing date

"L" document which may throw doubts on priority claim(s) or which is cited to establish the publication date of another citation or other special reason (as specified)

"O" document referring to an oral disclosure, use, exhibition or other means

"P" document published prior to the international filing date but later than the priority date claimed

"T" later document published after the international filing date or priority date and not in conflict with the application but cited to understand the principle or theory underlying the invention

"X" document of particular relevance; the claimed invention cannot be considered novel or cannot be considered to involve an inventive step when the document is taken alone

"Y" document of particular relevance; the claimed invention cannot be considered to involve an inventive step when the document is combined with one or more other such documents, such combination being obvious to a person skilled in the art

"&" document member of the same patent family

Date of the actual completion of the international search	Date of mailing of the international search report
26 April 2013	07/05/2013

Name and mailing address of the ISA/	Authorized officer
European Patent Office, P.B. 5818 Patentlaan 2 NL - 2280 HV Rijswijk Tel. (+31-70) 340-2040, Fax: (+31-70) 340-3016	Verdelho, Luís

1

Form PCT/ISA/210 (second sheet) (April 2005)

INTERNATIONAL SEARCH REPORT

International application No
PCT/EP2013/051575

C(Continuation). DOCUMENTS CONSIDERED TO BE RELEVANT

Category*	Citation of document, with indication, where appropriate, of the relevant passages	Relevant to claim No.
A	US 2009/200716 A1 (SHAHANA SATOSHI [JP]) 13 August 2009 (2009-08-13) paragraph [0024] - paragraph [0026] figure 2 -----	1,14,19

1

INTERNATIONAL SEARCH REPORT

Information on patent family members

International application No
PCT/EP2013/051575

Patent document cited in search report	Publication date	Patent family member(s)	Publication date
DE 19514267 A1	17-10-1996	NONE	
US 4887990 A	19-12-1989	EP 0311536 A2	12-04-1989
		FR 2621372 A1	07-04-1989
		US 4887990 A	19-12-1989
DE 10346104 A1	12-05-2005	NONE	
US 2009200716 A1	13-08-2009	DE 102009005185 A1	27-08-2009
		JP 2009184539 A	20-08-2009
		US 2009200716 A1	13-08-2009