United States Patent [19]

Sessody

[11] **3,844,534**

[45] **Oct. 29, 1974**

[54] **LIGHTWEIGHT HYDRAULIC JACK**

[75] Inventor: **Donald W. Sessody**, Milwaukee, Wis.

[73] Assignee: **Applied Power Inc.**, Milwaukee, Wis.

[22] Filed: **June 4, 1973**

[21] Appl. No.: **366,582**

[52] **U.S. Cl.** ..... **254/93 H**

[51] **Int. Cl.** **B66f 3/24**

[58] **Field of Search** ..... 254/93 H, 93 R; 60/477; 92/169, 171

[56] **References Cited**

UNITED STATES PATENTS

2,352,390	6/1944	Kirkland	254/93 H
2,527,428	10/1950	Kemerer	254/93 H
2,734,716	2/1956	Pearne	254/93 H
3,047,269	7/1962	Renshaw	254/93 H
3,439,586	4/1969	Holtan	92/169
3,743,448	7/1973	Dorn	92/171
3,757,523	9/1973	Resuggan	254/93 H

FOREIGN PATENTS OR APPLICATIONS

126,701	5/1919	Great Britain	92/171

Primary Examiner—Al Lawrence Smith
Assistant Examiner—Robert C. Watson
Attorney, Agent, or Firm—James E. Nilles

[57] **ABSTRACT**

A lightweight hydraulic jack having a gray iron sleeve embedded within a cast aluminum housing, a steel plunger mounted for reciprocal motion within the sleeve, the sleeve being provided with an annular shoulder and a number of longitudinal ribs to prevent movement of the sleeve with respect to the housing. Hydraulic fluid is pumped from a reservoir in the housing into the sleeve and from the sleeve back to the reservoir through steel valve seats which are positioned at the control points in a fluid passage network in the housing.

4 Claims, 15 Drawing Figures

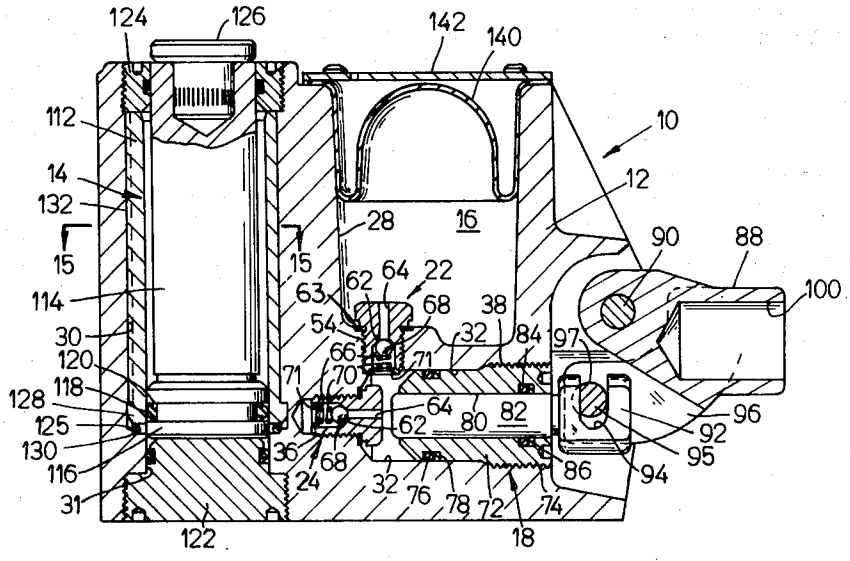

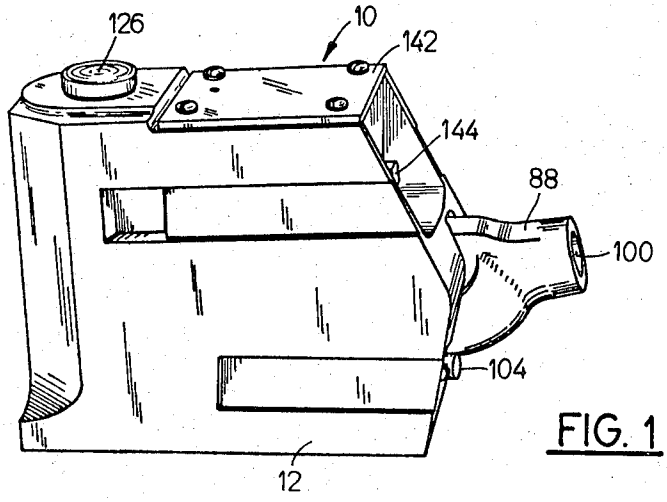

FIG. 1

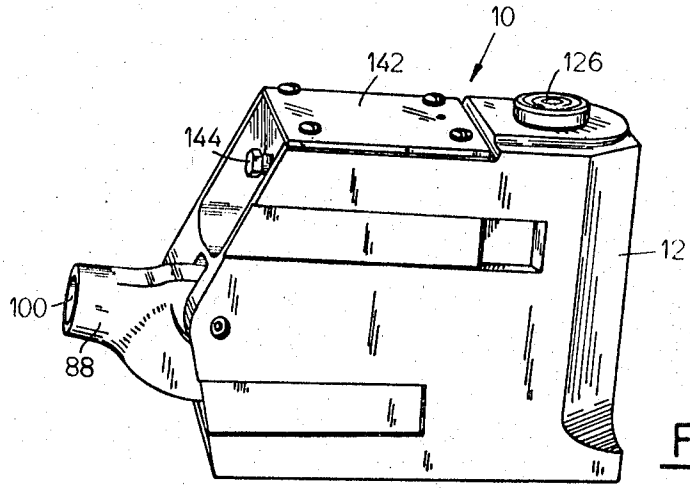

FIG. 2

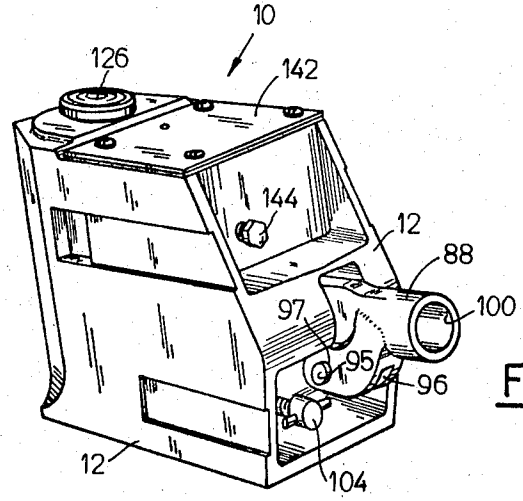

FIG. 3

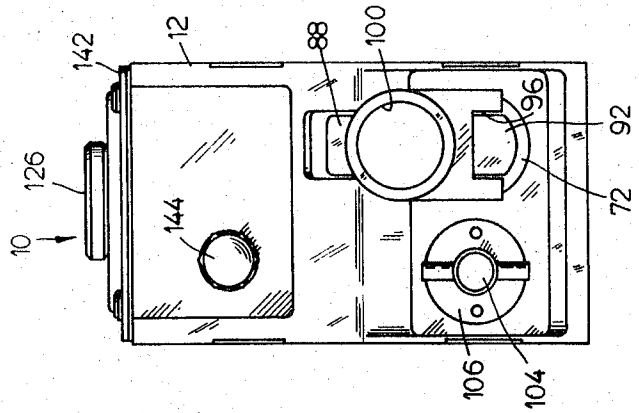

FIG. 6

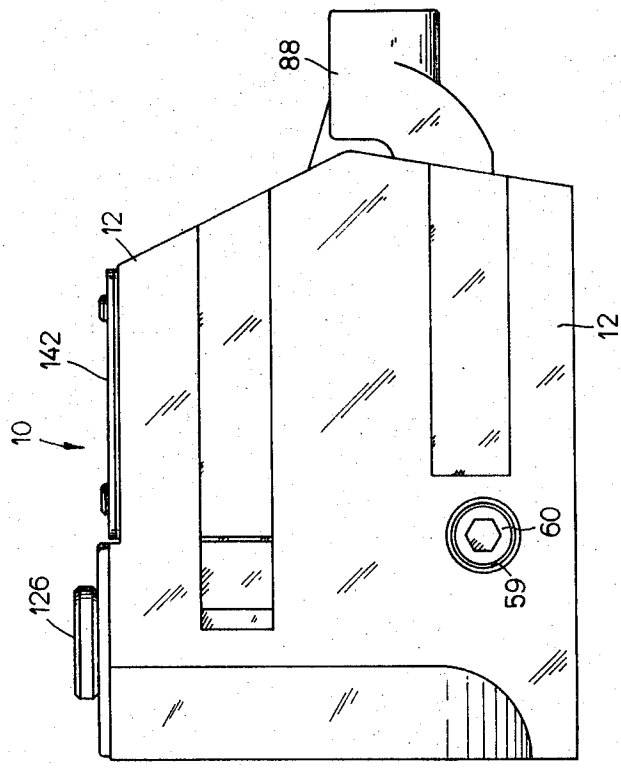

FIG. 5

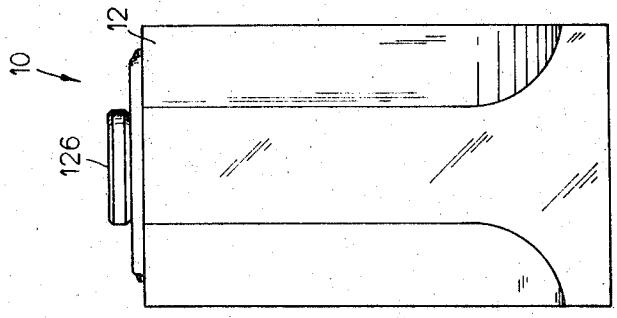

FIG. 4

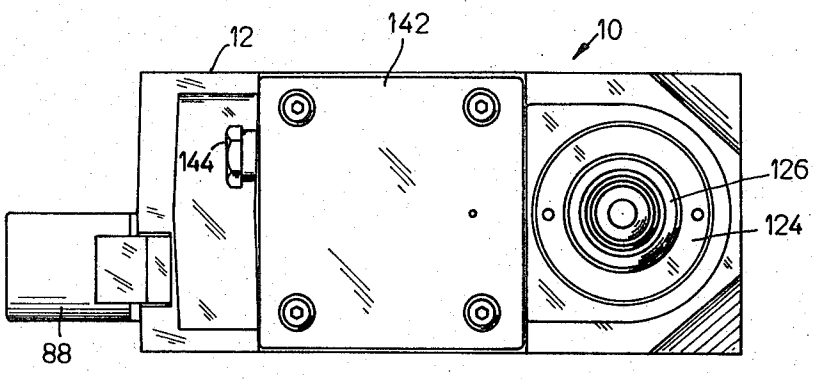

FIG. 7

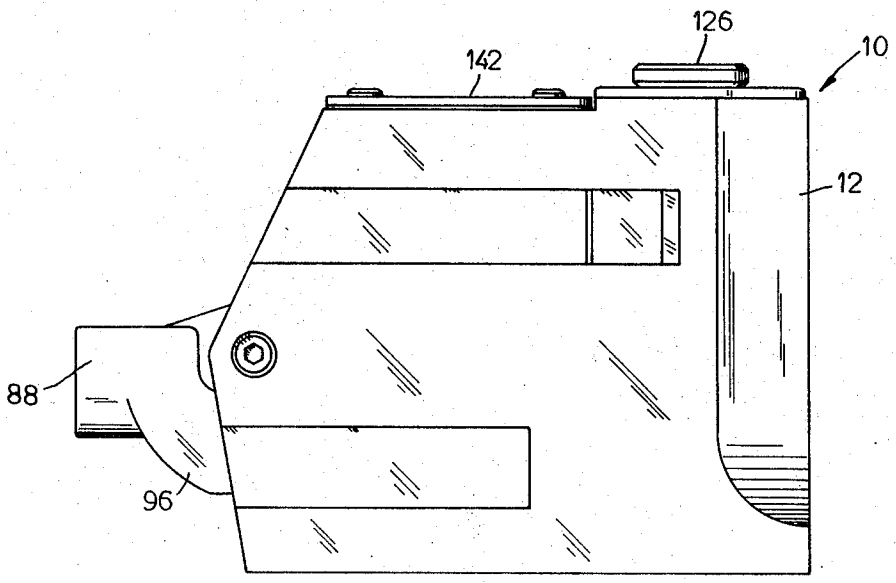

FIG. 8

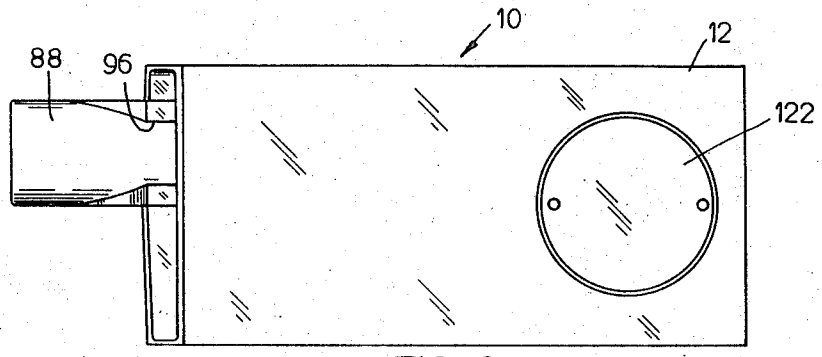

FIG. 9

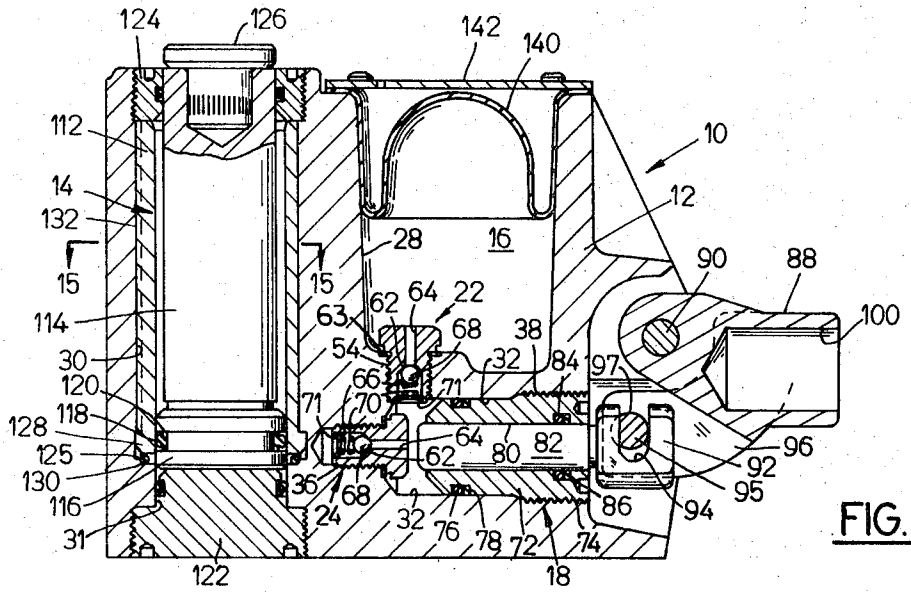

FIG. 11

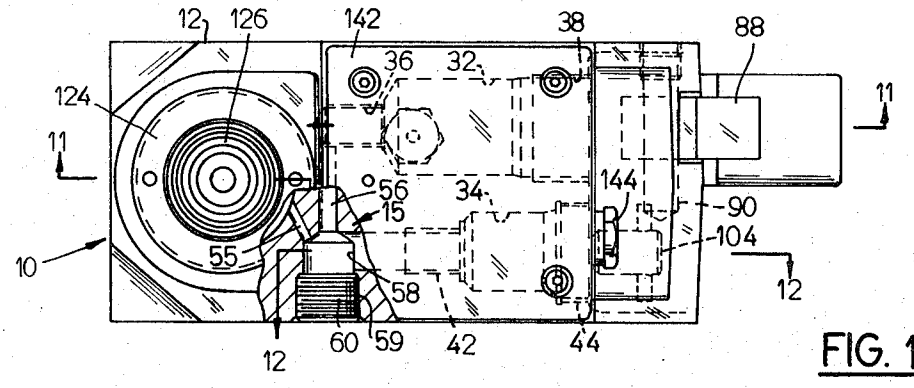

FIG. 10

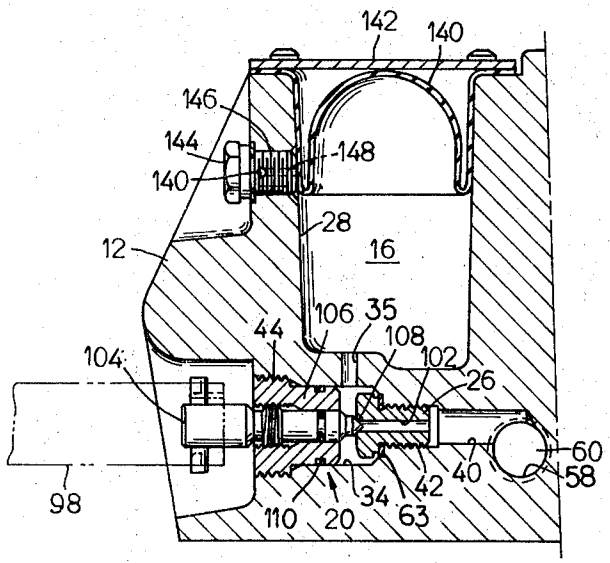

FIG. 12

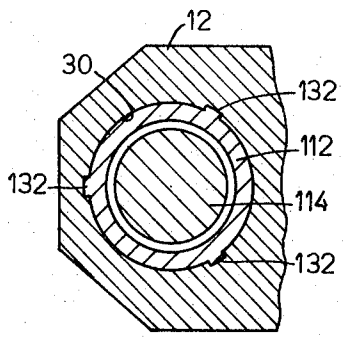

FIG. 15

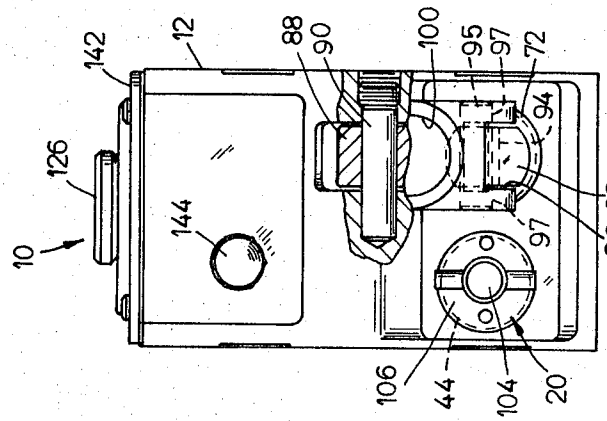
10
126
142
12
144
88
90
100
95
97
72
94
92
96
97
106
44
104
20

FIG. 14

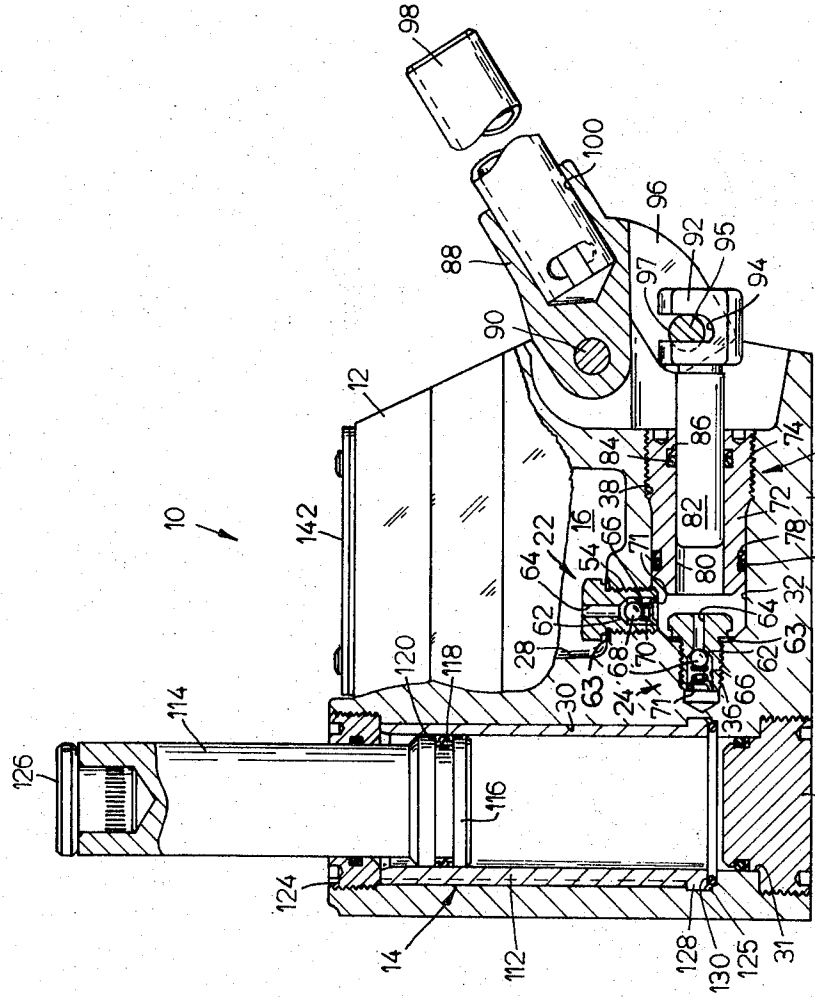
98
100
96
92
95
94
97
88
90
12
10
142
84
86
74
18
38
16
22
64
54
66
71
82
72
12
78
76
80
32
62
28
63
68
70
24
71
36
66
62
63
64
30
120
118
114
126
116
122
124
14
112
128
130
125
31

FIG. 13

LIGHTWEIGHT HYDRAULIC JACK

BACKGROUND OF THE INVENTION

Hydraulic jacks of the type contemplated generally operate at high pressure up to 10,000 psi. It has been the general practice to manufacture these jacks from heavy materials such as iron and steel which are capable of withstanding high hydraulic loads at these pressures. Therefore, as the rating of the jack increased the weight of the jack also increased.

SUMMARY OF THE INVENTION

The present invention provides a lightweight hydraulic jack which is capable of handling heavy loads without any substantial increase in weight at higher rated loads. This has been accomplished by casting the housing from aluminum and embedding an iron sleeve in the casting as an integral part of the base of the jack. The sleeve is prevented from moving in the housing by a shoulder on the bottom and a number of longitudinally extending ribs along the sides to allow for machining after casting.

The life of the jack has been extended by using steel parts in all instances where there is flow of hydraulic fluid under high pressure. The strength of the bond between the sleeve and the casting is protected by an O-ring seal located in a space provided between the sleeve and the casting.

Other objects and advantages will become apparent from the following description.

DRAWINGS

FIG. **1** is a perspective view of the jack of this invention taken from the upper left hand side;

FIG. **2** is a perspective view of the jack of this invention taken from the upper right hand side;

FIG. **3** is a perspective view of the back of the jack;

FIG. **4** is a front view in elevation of the jack;

FIG. **5** is a left side view in elevation of the jack;

FIG. **6** is a rear end view of the jack;

FIG. **7** is a top plan view of the jack;

FIG. **8** is a right side view in elevation of the jack;

FIG. **9** is a bottom view of the jack;

FIG. **10** is a top view of the jack partly broken away to show the hydraulic flow passages in the jack housing;

FIG. **11** is a sectional view taken on line **11—11** of FIG. **10** showing the pump assembly and the piston and cylinder assembly in the jack;

FIG. **12** is a sectional view in elevation taken on line **12—12** of FIG. **10** showing the hydraulic fluid passage connection to the reservoir;

FIG. **13** is a view similar to FIG. **12** showing the piston in the elevated position;

FIG. **14** is a rear end view partly broken away to show the beam pin for the beam of the pump assembly; and

FIG. **15** is a cross-sectional view taken on line **15—15** of FIG. **11** showing the retaining ribs of the sleeve.

DESCRIPTION OF THE INVENTION

The hydraulic jack **10** of the present invention generally includes a lightweight aluminum base **12** having a steel plunger and iron sleeve assembly **14** and a fluid reservoir **16.** Fluid is pumped from the reservoir **16** to the piston and cylinder assembly **14** by means of a pump assembly **18** and is returned from the piston and cylinder assembly **14** to the reservoir **16** by means of a fluid release valve assembly **20.** The hydraulic jack is actuated by closing the valve assembly **20,** pumping fluid through one-way check valves **22** and **24** in the piston and cylinder assembly **14.** Pressure is released in the piston and cylinder assembly by opening the valve assembly **20** to allow fluid to flow back to the reservoir **16.**

The Housing or Base

Referring to FIGS. **10, 11** and **12,** the housing or base **12** is cast from aluminum and includes a closed end bore or recess **28** and an open end bore **30** having a reduced diameter section **31.** The closed end bore **28** defines the reservoir **16** and is connected to the open end bore **30** by means of a fluid passage network **15.**

In this regard the fluid passage network **15** is connected to first and second closed end bores **32** and **34** which accommodate the pump assembly **18** and the release valve assembly **20.** The fluid bore **32** includes a threaded reduced diameter section **36** at its inner end and a threaded section **38** at its outer end. The second bore **34** includes a reduced diameter section **40** at its inner end having a threaded section **42** at the entry to the reduced diameter section **40** and a threaded section **44** at the inlet to the second bore **34.**

Fluid Passage Network

The fluid passage network **15** includes a threaded bore **54** connecting the reservoir **16** to the bore **32;** a cross passage **56** connecting the reduced diameter section **36** to the reduced diameter section **42** of the closed end bore **34** and a return port **35** connecting the bore **34** to the reservoir **16.** An enlarged section **58** is provided at the open end of passage **56** and includes threaded section **59.** The passage **56** is closed at its outer end by means of a threaded plug **60.** The enlarged section **58** is connected to the bore **30** by a port **55.**

The flow of fluid from the reservoir **16** to the bore **32** is limited to one-way flow by means of a check valve assembly **22.** The flow of fluid from the passage **32** to the passage **56** is controlled by means of a check valve assembly **24.** The check valve assemblies **22** and **24** both include a steel valve seat **62** having a small diameter port **64** which terminates in an enlarged counterbore or recess **66.** The ports **64** are closed by means of a steel ball **68** provided in counterbore **66.** The ball **68** is biased by means of a spring **70** into engagement with the inner end of its small diameter port **64.** The spring **70** is retained in the counterbore **66** by means of a spring retainer ring **71.** The valve seats **62** are sealed by means of gaskets **63.**

The Pump Assembly **18**

The pump assembly **18** includes a sleeve **72** having a threaded section **74** and is threadedly mounted in the threaded section **38** at the end of bore **32.** The sleeve **72** is sealed within the bore **32** by means of an O-ring seal **76** provided in a groove **78** in the outer surface of the sleeve **72.** The sleeve **72** includes an axially extending bore **80** and is formed from a wear resistant material such as steel.

Fluid is pumped into and out of the bore **32** by means of a plunger **82** mounted for reciprocal movement in

the bore **80**. The plunger **82** is sealed therein by means of an O-ring seal **84** provided in an annular groove **86** in the sleeve **72**.

The plunger **82** is reciprocated within the bore **80** by means of a beam **88** pivotally mounted on a beam pin **90** in the base **12**. The beam **88** includes a clevis **96** which is connected to a clevis **92** on the end of the plunger **82** by means of a pin **95**. The pin **95** extends through a groove **94** in the clevis **92** and openings **97** in the clevis **96**. The beam **88** is rotated about the pin **90** by means of a handle **98** having one end seated within an opening **100** in the beam **88**.

Relief Valve Assembly

The flow of fluid from the bore **30** to the reservoir **16** is controlled by means of the release valve assembly **20** positioned within the closed end bore **34**. The assembly **20** includes a steel valve seat **26** which is threadedly positioned within the threaded section **42** in the small diameter bore **34**. The valve seat **26** includes a small diameter opening **102**. The flow of fluid through the opening **102** is controlled by means of a valve stem **104** which is positioned within a sleeve **106** provided in the threaded section **44** in the bore **34**. The valve stem **104** includes a valve member **108** at the inner end which is positioned to engage the end of the small diameter opening **102** in the valve seat **26**. The valve stem **104** is sealed by means of an O-ring seal **110**.

Plunger and Sleeve Assembly

In accordance with the invention, the plunger and sleeve assembly **14** includes a sleeve **112** and a plunger **114** having a piston head **116** positioned for reciprocal movement within the sleeve **112**. The piston head **116** is sealed within the sleeve by means of an O-ring seal **118** provided in an annular groove **120** in the outer periphery of piston head **116**. The lower end of the bore **30** is closed by means of a steel plug **122**. The plunger **114** is prevented from moving out of the sleeve **112** by means of a stop ring **124** mounted at the open end of the bore **30**. A saddle **126** can be provided at the outer end of the plunger **114**, if required.

The sleeve **112** is formed of cast iron such as gray iron and is embedded and bonded in the aluminum casting forming the base **12** at the time that the base is cast. The lower end of the sleeve **112** is spaced from the reduced diameter section **31** leaving a gap **125**. The sleeve **112** is retained or prevented from moving axially within the bore **30** by means of a shoulder or flange **128** provided at the lower end of the sleeve **112**. Although a cast iron sleeve is shown and described, the sleeve could also be machined from an iron casting.

The sleeve **112** must be prevented from rotating in the casting **12** during machining or trimming of the bore in the sleeve **112**. This is prevented by means of a number of ribs **132** provided on the outer surface of the sleeve. The rib **132** is embedded in the aluminum base during casting.

Fluid under pressure is prevented from flowing into the gap **125** by means of an O-ring seal **130**. The seal **130** prevents the pressurized hydraulic fluid from reaching the bond between the sleeve and the casting.

Means are provided for pumping fluid from the reservoir **16** in any position of the jack **10**. Such means is in the form of a rubber bladder **140** positioned in the open end of reservoir **28**. The bladder **140** is retained therein by means of a cover **142**. Air is vented from the reservoir by means of a vent plug **144** threadedly mounted in threaded opening **146**. A port **148** and cross bore **140** are provided in the plug to allow for the venting of air without removing the plug.

Resume

In accordance with the invention each of the parts of the jack which is subject to wear or galling is made of a material which is resistant to such action. In this regard the plunger and sleeve assembly includes a sleeve **112** made of grey iron and a plunger **114** made of steel. The fluid control points in the fluid passage network are controlled by check valve assemblies **22** and **24** and relief valve assembly **20**. Each of the check valve assemblies **22** and **24** includes a steel valve seat **62** and the release valve assembly **20** includes a steel valve seat **26**. Although the use of steel for this purpose is generally well known, the incorporation of individual steel units in a lightweight housing has made it possible to provide a heavy duty jack which can be easily handled by the operator. The iron sleeve is provided with a shoulder and a number of ribs to securely lock the sleeve in the housing. The sleeve can then be machined or trimmed. The bond between the sleeve and housing has been protected by an O-ring seal.

I claim:

1. A hydraulic jack comprising a lightweight cast aluminum housing having a hydraulic liquid reservoir,

an iron sleeve cast into said housing to form an integral part thereof,

a steel plunger mounted for reciprocal motion in said sleeve,

means in said housing for pumping fluid under pressure from said reservoir into the interior of said sleeve and pressure release means for connecting the interior of said sleeve to said reservoir for relieving pressure in the interior of said sleeve,

said sleeve including a shoulder on the outer periphery of the inner end of said sleeve for preventing axial movement of said sleeve in said housing, sealing means located between the inner end of said sleeve and said housing whereby hydraulic fluid under pressure in said sleeve is prevented from flowing between said sleeve and housing and a stop ring threadably engaged in said housing and abutting against the outer end of said sleeve.

2. The jack according to claim **1** wherein said sleeve includes an axially extending rib on the outer surface to prevent rotation of said sleeve in said housing.

3. The hydraulic jack according to claim **1** wherein said pumping means includes a pair of one way check valves each having a steel valve seat.

4. The hydraulic jack according to claim **3** wherein said pressure release means includes a steel valve seat.

* * * * *