March 20, 1934. L. C. WARNER 1,951,457

UNIVERSAL FRAMEWORK

Filed March 2, 1932

Fig. 1.

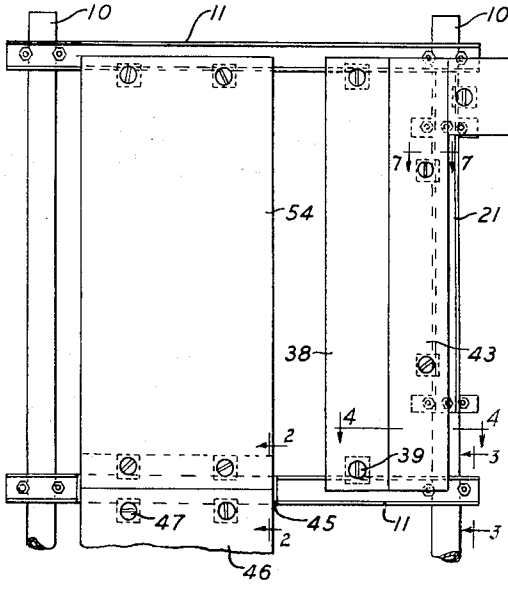

Fig. 6.



Fig. 2.

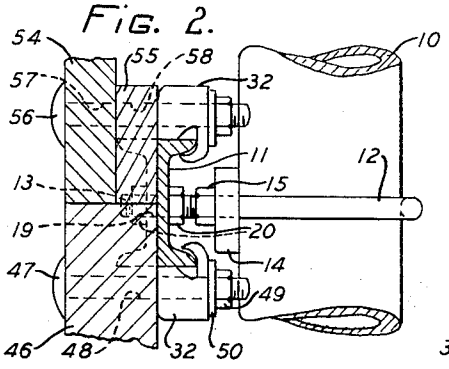

Fig. 3.

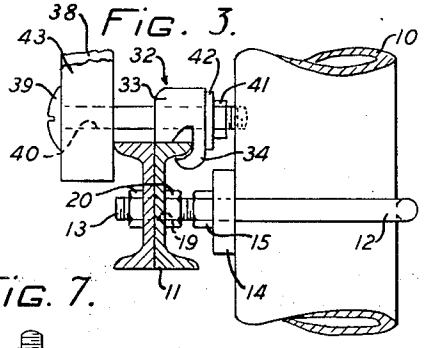

Fig. 7.

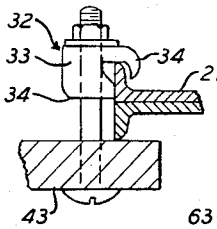

Fig. 4.

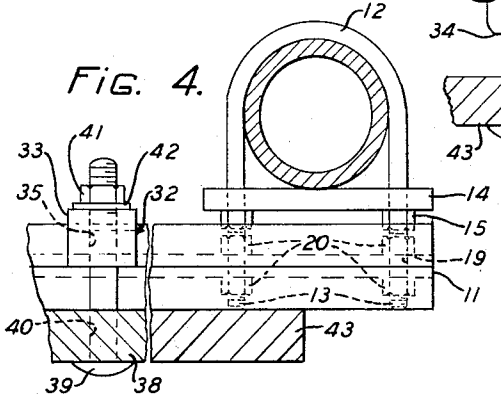

Fig. 5.

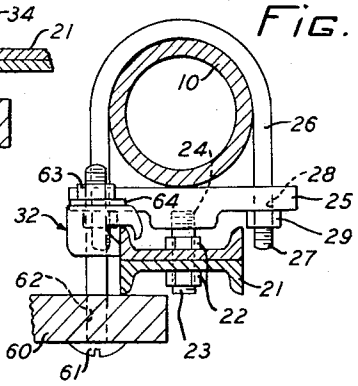

INVENTOR

L. C. WARNER

BY E. R. Nowlan

ATTORNEY

Patented Mar. 20, 1934 1,951,457

UNITED STATES PATENT OFFICE

1,951,457

UNIVERSAL FRAMEWORK

Lester C. Warner, Plainfield, N. J., assignor to Western Electric Company, Incorporated, New York, N. Y., a corporation of New York

Application March 2, 1932, Serial No. 596,394

7 Claims. (Cl. 175—369)

This invention relates to a universal framework, and more particularly to an adjustable framework for supporting control panels for electrical apparatus.

When assembling a supporting framework for mounting the control panels associated with electrical apparatus, one practice is to arrange a number of tubular members in vertical and horizontal alignment and to distribute thereon a variety of fittings to which the control panels are attached.

An object of the present invention is to provide a simplified and improved adjustable framework for supporting the control panels of electrical apparatus.

In order to attain this object, in accordance with the preferred embodiment of the invention, channel members are affixed to spaced tubular supports and thereon different sizes of control panels are mounted in various arrangements by utilizing a single type of clamp which is adaptable for adjustable engagement with the flanges of the channel members.

Other features and advantages of the invention will be understood more readily from the following detailed description when taken in conjunction with the accompanying drawing, wherein

Fig. 1 is a fragmentary elevational view of a framework illustrating the preferred embodiment of the invention;

Fig. 2 is a sectional view taken along line 2—2 of Fig. 1;

Fig. 3 is a sectional view taken along line 3—3 of Fig. 1;

Fig. 4 is a sectional view taken along line 4—4 of Fig. 1;

Fig. 5 is a sectional view taken along line 5—5 of Fig. 1;

Fig. 6 is a fragmentary and elevational view taken along the right end of Fig. 1, and

Fig. 7 is a sectional view taken along the line 7—7 of Fig. 1.

Referring to the drawing wherein like characters of reference indicate corresponding parts in the several views, tubular supports 10 (Fig. 1) arranged in vertical alignment are preferably attached to the floor by flanges (not shown). Channel members 11 (Figs. 1, 2, 3 and 4) arranged web to web are spaced transversely upon the tubular supports and attached thereto by U bolts 12 engaging a portion of the periphery of the tubular support and having end portions 13 projecting through a yoke 14 to which they are fastened by nuts 15. Also, the end portions 13 of the U bolts 12 extend through apertures 19 in the horizontal channel members 11, the latter being secured to the tubular supports and aligned thereon by adjustment of nuts 20 attached to the U bolts 12. Channel members 21 (Figs. 1, 5 and 7) arranged web to web are mounted longitudinally upon the tubular supports and aligned with the transversely mounted channel members 11 by the adjustment of nuts 22 upon a stud 23 which has an end portion 24 preferably threaded into a yoke 25. A U bolt 26 engaging a portion of the periphery of the tubular support is provided with end portions 27 projecting through apertures 28 of the yoke 25 and secured thereto by nuts 29.

A clamp 32 (Figs. 3, 4 and 7) employed for mounting the control panels upon the channel members preferably consists of a U shaped member formed with opposite parallel sides 33 for resting upon a flange of the channel members, the sides 33 having hooked end portions 34 which project inwardly to engage the same flange of the channel member. Intermediate the parallel sides 33 there is provided a channel 35 to allow the passage of a bolt therethrough for fastening the clamp upon a flange of the channel member.

Panels 38 (Figs. 1, 3 and 4) of a uniform thickness and preferably made of ebony asbestos are vertically mounted upon the horizontal channel members 11 by bolts 39 projecting from the front surface thereof through apertures 40 to engage the clamp 32 and to secure it upon a flange of the channel member 11 by tightening a nut 41 on the bolt 39. The clamp is restrained from disengagement with the channel member 11 by a lock washer 42 compressed between the nut 41 and the clamp. It occurs frequently that in the position occupied by panel 43, as illustrated in Fig. 1, there is placed a panel of insufficient width to permit the use of mounting bolts attachable to the channel members 11, and, in such a case, the panel 43 is supported as illustrated in Figs. 1 and 7 by engaging the clamp 32 upon a flange of the longitudinal channel member 21 as hereinbefore described.

When it is desirable to mount control panels of varying thicknesses in the same bay, the mounting is accomplished as illustrated in Figs. 1 and 2, wherein it will be observed that a recess 45 is provided in one of the horizontal channel members 11 by cutting away a section of one of the channel members and thereinto placing an end of a thicker panel 46. Bolts 47 project from the front surface of the panel 46 through an aperture 48 therein to engage the clamp 32 which is

secured to the horizontal channel member 11 by tightening a nut 49 against a lock washer 50 on the bolt 47. The front surface of a thinner panel 54 is aligned with the front surface of the thicker panel 46 by positioning a spacer 55 at the rear of the panel 54 contiguously with the thicker panel 46 and its supporting horizontal channel member 11. A bolt 56 extends from the front surface of the panel 54 through an aperture 57 therein and the aperture 58 in the spacer 55 to engage the clamp 32 upon the flange of the channel member 11 in the manner as hereinbefore described.

A panel 60 (Figs. 1 and 5) is mounted horizontally upon the longitudinal channel member 21 by a bolt 61 projecting from the front surface thereof through an aperture 62 to engage a clamp 32 which is fastened to a flange of the channel member 21 as the nut 63 is screwed against a lock washer 64 on the bolt 61. It is understood that control panels of varying thicknesses can be mounted and aligned on the longitudinal channel members 21 in the manner as described with reference to similar mountings upon horizontal channel members 11. It will be understood, also, that the control equipment associated with the electrical apparatus is mounted upon the various panels, and, further, that the usual practice is to mount the panels contiguous each other rather than to allow a space between them as shown in Fig. 1.

It is readily apparent, therefore, that a framework embodying the features of this invention is of a simple and inexpensive construction, consists of a minimum of parts, and is quickly and easily assembled. In addition, it is evident that the employment of horizontal channel members renders it possible to align the framework quickly as well as to maintain the alignment indefinitely without appreciable variation.

While details of construction have been given to explain the invention fully, it is to be understood that such are capable of other modifications and are to be construed as limited only by the scope of the appended claims.

What is claimed is:

1. In a switchboard mounting adapted for mounting panels of various thicknesses thereon with their faces flush with each other, a pair of spaced supports, a pair of channel members adjustably mounted on said spaced supports, other channel members located web to web with and mounted on said first mentioned channel members in the thin panel positions and means adapted to be secured to said panels and for adjustably engaging said first mentioned channel members.

2. In a switchboard mounting adapted for mounting horizontal and vertical panels thereon, a pair of spaced vertical supports, a pair of horizontal channel members adjustably mounted on said supports, an individual vertical channel member adjustably mounted on each of said vertical supports, and means adapted to be secured to said panels and for adjustably engaging said channel members.

3. A switchboard comprising a plurality of individual horizontal panels, a plurality of individual vertical panels, a mounting therefor, and means for securing said panels to said mounting, said mounting comprising at least three spaced vertical tubular supports, horizontal channel members adjustably mounted on at least one of said supports and extending to a second of said supports, an adjustable vertical channel member mounted on at least the third of said supports, said securing means comprising a holding member adapted to engage a flange of said channel members adjustably and a bolt associated with the panels.

4. In a switchboard mounting adapted for panels of various widths, a plurality of spaced supports, a plurality of flanged members adjustably mounted on the spaced supports, and a plurality of holdings each having a hooked end portion for engaging a flange of the members and adapted for mounting the panels thereupon.

5. In a switchboard mounting adapted for panels of various widths, a plurality of spaced vertical supports, a plurality of spaced horizontal flanged members arranged web to web and adjustably mounted on the vertical supports, and a plurality of clamps each having an integral hooked end portion for engaging a flange of the members and adapted for mounting the panels thereupon.

6. In a switchboard mounting adapted for mounting panels of various widths, a plurality of spaced vertical supports, a plurality of flanged members arranged web to web and mounted transversely and longitudinally upon the supports, and a plurality of means each provided with an integral hooked portion for engaging a flange of the members and adapted for mounting the panels horizontally and vertically thereupon.

7. In a switchboard including a framework adapted for mounting and aligning panels of various thicknesses, a plurality of spaced vertical supports, a plurality of spaced horizontal channel members adjustably mounted on the supports, a plurality of other channel members arranged web to web upon sections of the spaced channel members leaving recesses between the ends thereof and affixed to the first mentioned channel member, panels of a uniform thickness being mounted upon the second mentioned channel members and panels of a greater thickness being mounted in the recesses and upon the first mentioned channel members, and a plurality of fittings each having a plurality of integral hooked portions for engaging a flange of the first mentioned channel members and adapted for mounting the panels thereupon.

LESTER C. WARNER.