United States Patent [19]

Ballin

[11] **3,829,938**

[45] **Aug. 20, 1974**

[54] **SEPARABLE INTERLOCKING FASTENERS AND METHOD OF MAKING THEM**

[76] Inventor: **Gene Ballin,** 159 Main St., Hempstead, N.Y. 11550

[22] Filed: **Mar. 24, 1972**

[21] Appl. No.: **237,634**

[52] **U.S. Cl.**..... **24/201 C,** 24/204, 24/205.13 D

[51] **Int. Cl.**..... **A44b 17/00**

[58] **Field of Search**..... 24/201 C, 204, 205.13 D

[56] **References Cited**

UNITED STATES PATENTS

3,679,531	7/1972	Wienand et al.	24/201 C
3,176,364	4/1965	Dritz	24/201 C
2,652,611	9/1953	Jaster	24/201 C
2,715,254	8/1955	Tschappu	24/204
3,557,413	1/1971	Engle	24/204
2,353,858	7/1944	Tedesco	24/201 C
2,558,367	6/1951	Madsen	24/201 C
3,561,073	2/1971	Rosser	24/205.1
2,046,796	7/1936	Sundback	24/205.13 R
2,909,822	10/1959	Botti et al.	24/201 C

FOREIGN PATENTS OR APPLICATIONS

901,041	1/1954	Germany	24/205.13 D
158,946	9/1954	Australia	24/201 C
1,053,953	1/1954	France	24/205.13 D

Primary Examiner—Bobby R. Gay
Assistant Examiner—Darrell Marquette
Attorney, Agent, or Firm—Howard C. Miskin

[57] **ABSTRACT**

An elongated separable fastener includes two similar sections formed of a resilient resin, each section including a longitudinally extending socket with a restricted throat and an elongated plug with an enlarged head which releasably engages the socket of the other section. Mating transverse recesses and projections are provided in the fastener sections to restrict their relative longitudinal displacement. In one form, each section includes a base web and a pair of transversely spaced longitudinal vertical plugs and longitudinally spaced projections projecting medially from the web, the space between one of the plugs and the projections defining a socket, and in another form, each section is U-shaped with enlarged heads on the side legs, longitudinally spaced transverse ribs being positioned at the base of the socket between the legs and the legs having longitudinally spaced transverse grooves. A plurality of side-by-side sections may be integrally formed as well as back-to-back sections and they may be longitudinally reinforced.

10 Claims, 16 Drawing Figures

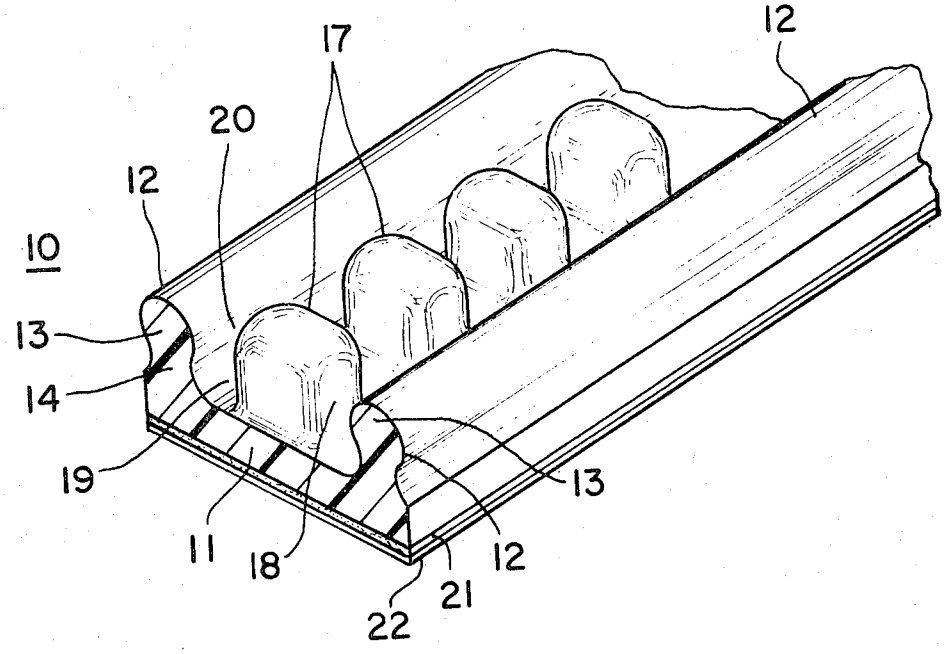

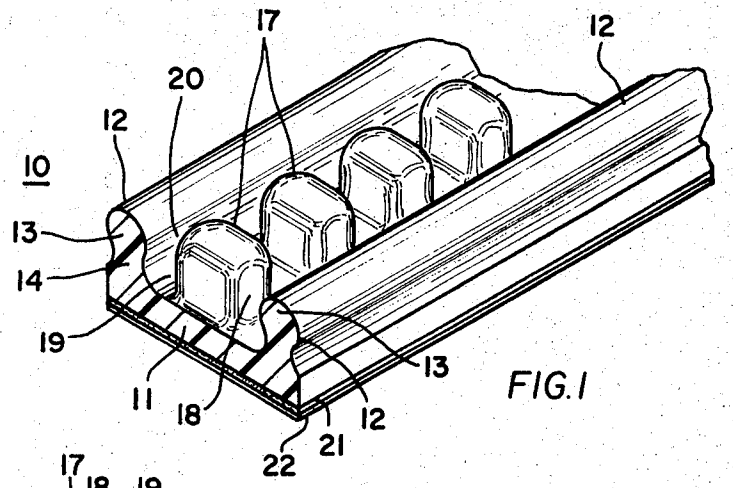

FIG. 1

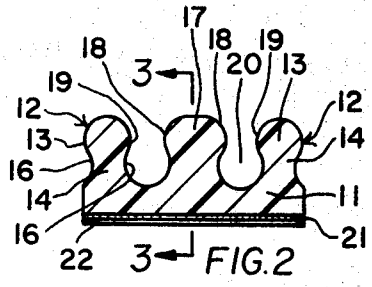

FIG. 2

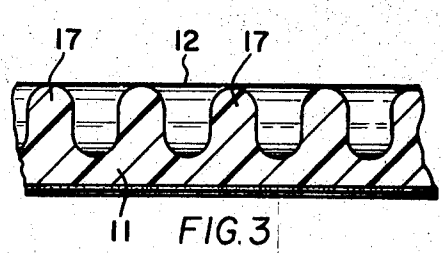

FIG. 3

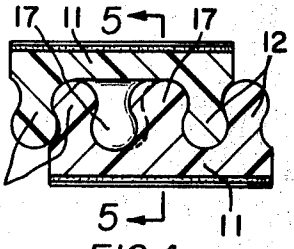

FIG. 4

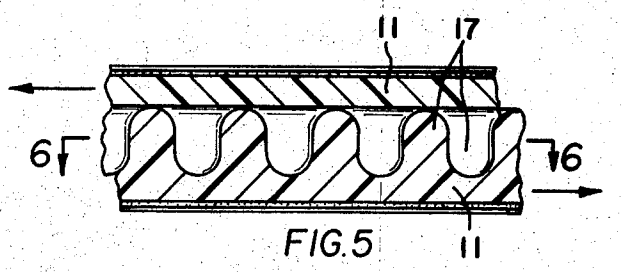

FIG. 5

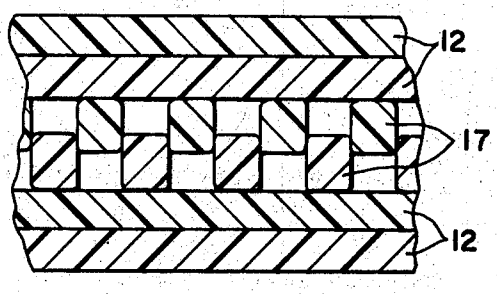

FIG. 6

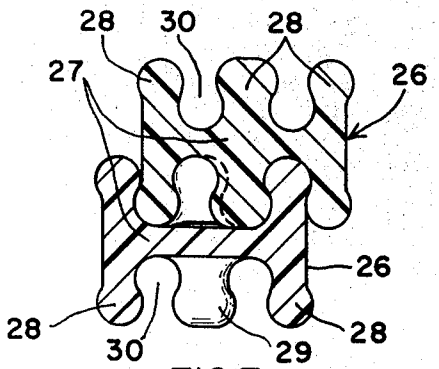

FIG. 7

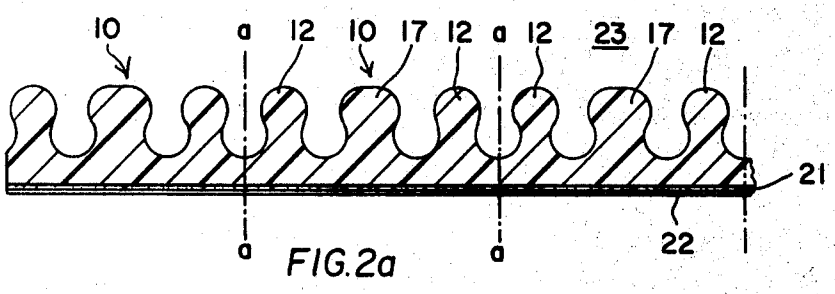

FIG. 2a

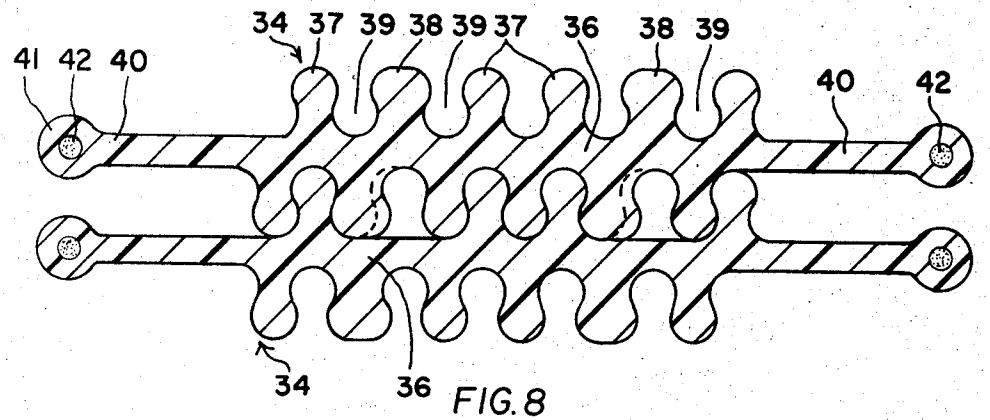

FIG. 8

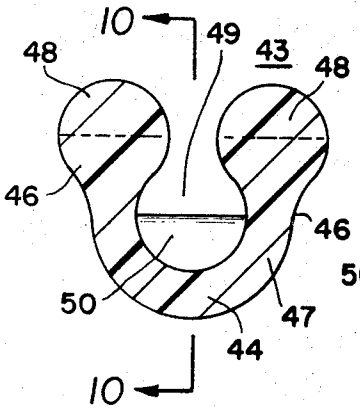

FIG. 9

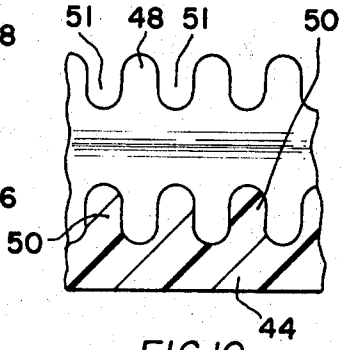

FIG. 10

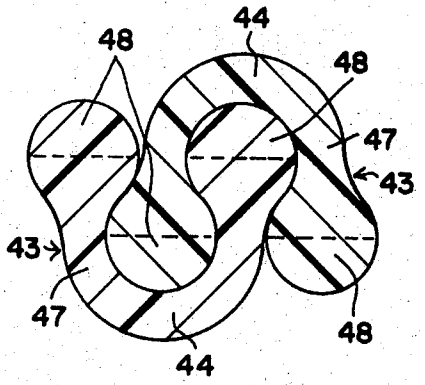

FIG. 11

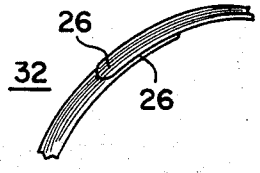

FIG. 12

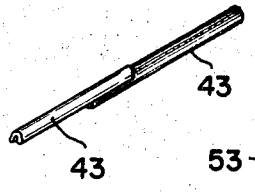

FIG. 13

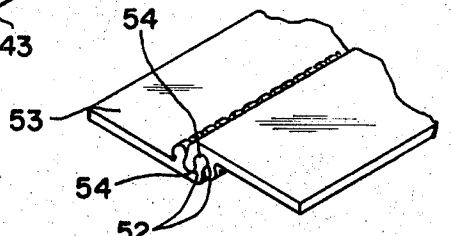

FIG. 14

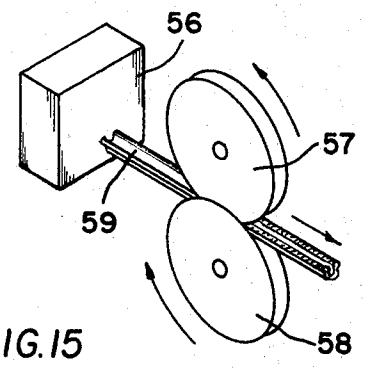

FIG. 15

SEPARABLE INTERLOCKING FASTENERS AND METHOD OF MAKING THEM

BACKGROUND OF THE INVENTION

The present invention relates generally to improvements in fasteners and it relates particularly to an improved elongated separable fastener device in which the fastener sections are coupled by pressing them together and are separated by peeling one from the other.

Elongated separable fastening devices heretofore employed and proposed are of various shapes and structures and possess numerous drawbacks and disadvantages and generally represent a compromise in their operation and effectiveness. Thus the conventional elongated channel socket and plug devices are usually unreliable and offer little resistance to their relative longitudinal displacement and are accordingly of only limited application. The slide type separable fastener is an awkward and relatively expensive device of little versatility and reliability. A separable fastener which withstands a limited longitudinal pull is the type which includes two woven releasably intercoupled multiple hook and eye fabrics, marketed under the trademark "VELCRO." However this type of fastener leaves much to be desired. It requires two differently constructed sections, it is of very limited width and thickness, it is a dirty material in that it is highly retentive of foreign matter, dust and particles and tends to shed and wear out, the sections mate in a random manner, and the device absorbs moisture and is expensive and hence its use in many applications is economically unwarranted.

SUMMARY OF THE INVENTION

It is a principal object of the present invention to provide an improved separable fastener.

Another object of the present invention is to provide an improved elongated separable fastener, which is easily assembled, but resists longitudinal separation.

Still another object of the present invention is to provide an improved elongated separable fastener which is flexible and restricted against relative transverse and longitudinal displacement.

A further object of the present invention is to provide a separable fastener which prevents movement in any direction within the plane of the joining of the sections while permitting easy opening and closing in a direction transverse to the plane of joining.

A still further object of the present invention is to provide a separable fastener of the above nature characterized by its reliability, ease and convenience in use, low cost, ruggedness and long wearing properties, attractive appearance, and great versatility and adaptability.

The above and other objects of the present invention will become apparent from a reading of the following description taken in conjunction with the accompanying drawings which illustrate preferred embodiments thereof.

In a sense the present invention contemplates the provision of a separable fastener device formed of a resiliently deformable material and comprising a pair of separably interlocked first and second fastener sections, the first section having a longitudinally extending socket with a restricted entrance throat and an enlarged base, the second section having a longitudinally extending plug including a shank registering with the throat and an enlarged head registering with the socket base, and the fastener sections having longitudinally spaced separably registering means for restricting the relative longitudinal movement of the fastener sections.

In one form of the improved fastener the two fastener sections are similarly shaped and may be separate elements or integrally joined and each section includes a base web, a pair of transversely spaced side legs with enlarged heads, and longitudinally spaced projections medially located between the side legs and having concavities in their lower side faces. In the coupled condition of the fastener sections, a side leg of each section registers with the socket defining space between a side leg and the projections of an opposite section. A pair of side legs may be formed on one or both faces of the web and a plurality of side-by-side sections may be integrally formed and the fastener sections may be integrally formed along the border of a panel or web. According to another form of the separable fastener, each section is U-shaped with the side legs having enlarged heads provided with longitudinally spaced transverse grooves in the tops thereof and longitudinally spaced transverse ribs are formed on the section base. In the coupled condition, a leg of each section interdigitates the legs of the other section and the ribs are engaged resiliently by the grooves in the side legs heads.

The fastener device is advantageoulsy formed of a resiliently deformable or flexible synthetic organic polymeric resin, for example a polyolefin such as polyethylene or polypropylene, polyvinylchloride, or the like, and it may be produced by extrusion and shaping while still in a moldable state, injection molding, or by other suitable process. The fastener sections may be at the opposite ends of a commonly formed similarly shaped band and as such may be used as a strap or belt of adjustable length or they may be secured to or formed part of other substrates which may be used in envelopes, garments, wrappings, covers, drapery, carpets and the like. The fastener sections may be secured to the substrate by sewing, adhesive, heat sealing or any other suitable manner.

The improved fastener device is rugged, reliable, of low cost, and highly versatile and adaptable and overcomes the numerous drawbacks of the earlier devices.

BRIEF DESCRIPTION OF THE DRAWINGS

FIG. 1 is a fragmentary, enlarged, perspective view of a fastener member embodying the present invention;

FIG. 2 is a transverse cross sectional view thereof;

FIG. 2A is a view similar to FIG. 2 showing the fastener member in a prefinished state;

FIG. 3 is a sectional view taken along line 3 — 3 in FIG. 2;

FIG. 4 is a transverse sectional view of a pair of fastener members in a coupled condition;

FIG. 5 is a sectional view taken along line 5 — 5 in FIG. 4;

FIG. 6 is a sectional view taken along line 6 — 6 in FIG. 5;

FIG. 7 is a transverse sectional view of another embodiment of the present invention showing these fastener members in a coupled condition;

FIG. 8 is a transverse sectional view of a further embodiment of the present invention;

FIG. 9 is a transverse sectional view of a fastener member in accordance with a further embodiment of the present invention;

FIG. 10 is a sectional view taken along line 10 — 10 in FIG. 9;

FIG. 11 is a transverse sectional view showing a pair of fasteners of FIGS. 9 and 10 in coupled condition;

FIG. 12 is a fragmentary perspective view of a closed belt employing the improved fastener construction;

FIG. 13 is a perspective view of a pair of fastener members of FIGS. 9 to 11 in an adjusted coupled condition;

FIG. 14 is a fragmentary perspective view showing a pair of coupled fastener members associated with integrally formed webs; and

FIG. 15 is a perspective view of an apparatus which may be employed in producing the improved fasteners.

DESCRIPTION OF THE PREFERRED EMBODIMENTS

Referring now to the drawings, particularly FIGS. 1 to 6 thereof, which illustrate a preferred embodiment of the present invention, the reference numeral **10** generally designates one of a pair of similarly shaped fastener members or sections which may be separate or may be longitudinally spaced portions of a correspondingly shaped elongated member. The section **10** is of channel shaped configuration and includes a longitudinally extending cross web **11** and a pair of integrally formed transversely spaced vertical legs **12.** Each of the vertical legs **12** terminates at its top in an enlarged transversely curved longitudinally linear head **13** which extends along the length of each leg **12,** the lower or shank portion **14** of the leg **12** having opposite curved side faces **16** complementing the side faces of the heads **13.**

Directed upwardly from and integrally formed with the cross web **11** are regularly longitudinally spaced similary shaped upright projections **17** which are medially spaced between legs **12** and which have longitudinal dimensions or thicknesses about equal to the space between successive projections **17.** Each projection **17** is rounded at its corners and edges and has curved side faces **18** spaced from and symmetric to the confronting faces **19** of legs **12.** The confronting faces **18** and **19** define a pair of longitudinally extending sockets **20** of substantially the shape of plug defining legs **12** interrupted by the spaces between projections **17** and include restricted upper throat portions and enlarged base portions. As seen best in FIG. **2,** projections **17** have a width greater than the distance between the confronting faces **18** and **19.** Advantageously, the underface of the web **11** is coated with a pressure sensitive adhesive layer **21** which is covered by a peelable tape **22** to facilitate the securement of the fastener sections **10** to respective substrates, it being noted that different means of securement may be employed.

A pair of fastener sections **10** may be separably coupled in the manner illustrated in FIGS. **4** to **6** by bringing the sections **10** with their open faces confronting each other and transversely offset so that the leg or plug **12** of one section registers with the socket **20** of the other section and with the projections **17** of one section registering with the spaces between successive projections **17** of the other section. The two sections are then progressively squeezed together along their lengths to resiliently snap the head **13** of each opposing section into engagement with a correspondingly registering socket **20** in the other section and to position the projection **17** into partially overlapping end to end interdigitating relationship. By reason of the interdigitating projections **17** relative longitudinal movement between the coupled fastener sections **10** is prevented as is any transverse movement. Separation of the fastener section **10** may be effected by peeling one from the other.

In fabricating the individual fastening sections **10** or a section including an adjoining strip, a plurality of side-by-side sections may be formed as composite body **23,** as shown in FIG. **2A,** and the body **23** may then be longitudinally slit along lines a - a to form the separate fastener members **10.** The composite body **23** may have its underface coated with a pressure adhesive **21** and covered by a peelable film **22** which is slit with the slitting of the composite body **10** and essentially forms the unit shown in FIGS. **1–2.**

In FIG. **7** of the drawing there is illustrated another embodiment of the present invention differing from that first described primarily in that plugs, sockets and projections are formed on the opposite faces of the cross web. Specifically, the separable fastener comprises a pair of similarly shaped fastener sections **26,** each including a cross web **27,** longitudinally extending plug defining side legs **28** directed upwardly and depending from the side borders of each cross web **27** and longitudinally spaced projections **29** medially located between each pair of side legs **28** and extending from cross web **27.** The side legs define with the projections **29** upper and lower pairs of transversely spaced sockets **30.** The shapes and relationships of plugs **28,** projections **29** and sockets **30** correspond to those of plugs **12,** projections **17** and sockets **20** of the fastener section **10** first described.

The fastener sections **26** are coupled and uncoupled in the manner first described except that either of the faces of each section **26** may be coupled with either of the faces of the other fastener section **26.** Thus, as shown in FIG. **12** of the drawing, the fastener sections **26** may be defined by the opposite ends of a continuous elongated band **32** integral with and of the same transverse cross section and configuration as fastener sections **26.** The band **32** may be adjusted and closed to any desired circumference without any twist by coupling the upper and lower faces of the fastener sections at preselected lengths or portions. On the other hand, when the band **32** is of a transverse cross-section not symmetric to the cross web, as the fastener sections **10,** in order to couple the ends of the band **32** it must be twisted 180° about its length. Of course, pieces of sections **10** can be attached to the continuous strip and the strip fastened in the same manner.

The embodiment of the present invention illustrated in FIG. **8** includes a pair of fastening or coupling members **34** which may be part of a common length thereof or may be separate and each coupling member **34** comprises a pair of integrally formed side by side coupling sections of the same configuration as the fastener section **26** previously described and includes a cross web **36,** side legs **37,** medial projections **38** and sockets **39** corresponding in shape and relationship to the corresponding elements of fastener section **26.** Integrally

formed with and projecting laterally from the sides of cross web 36 and of about the same thickness thereof are coplanar side webs 40. The outer borders of the side webs 40 are enlarged, as at 41, and have embedded and firmly anchored therein longitudinally extending flexible reinforcing lines 42 which may be of wire or any suitable high tensile strength line such as tenacity nylon or the like. The fastener members 34 are coupled and uncoupled in the manner earlier described and by reason of the reinforcing members 42 are of considerably greater tensile strength thereby greatly expanding its fields of application. Also, the members 34 may be fastened to a surface through side webs 40 in any convenient manner.

A further form of separable fastener embodying the present invention is shown in FIGS. 9 to 11 and 13 and includes an elongated member which, except as set forth, may be of uniform transverse cross section and terminates at opposite ends in similarly shaped separable fastener sections 43 each of which may constitute up to substantially half of the full length of the elongated member. Each of the sections 43 is of channel or U-shaped transverse cross-section, including a curved bottom cross arm 44 and similarly shaped plug defining side legs 46. The cross arm 44 and the bottom parts portions 47 of side legs 46 are of uniform thickness and the upper parts of the side legs 46 are in the form of enlarged cylindrical heads 48. An elongated socket 49 is defined by the confronting faces of side legs 46 and is of substantially the same shape as each of the side legs 46.

Formed in the base of the socket 49 and integral therewith are regularly longitudinally spaced round topped cross ribs or panels 40 which extend from the bottom of socket 49 to a point below the heads 48. Longitudinally spaced vertical transverse grooves 51 of the shape of the ribs 50 are formed in the plug heads 48 and are in vertical medial axial alignment with respective panels 50.

In the coupled condition of a pair of fastener sections 43, as illustrated in FIGS. 11 and 13, a plug 46 of each fastener section 43, is in engagement with a socket 49 of the other fastener section 43, the cross ribs 50 matingly engaging the grooves 51 in the socket coupled plug heads 48. The use, coupling and uncoupling of the pair of fastener sections 43, is as earlier described, relative transverse and longitudinal movement between the coupled fastener sections 43 being prevented.

As shown in FIG. 14, fastener sections 52 similar to fastener sections 43, may be provided with panels or webs 53 along the lengths of the fastener sections 52, the panels 53 projecting laterally from and integrally formed with the fastener section bottom cross arm 54. The panels 53 may be employed in any desired application such as by securing them in any suitable manner, to associated components which are to be separably joined or the panels 53, per se, may define such components and may be of any desired width and thickness.

An apparatus which may be employed for producing the subject fastener devices, for example, that shown in FIGS. 9 and 10, is diagramatically illustrated in FIG. 15. The apparatus includes a conventional plastic screw extruder 56 having an extrusion die with an opening approximately of the shape shown in section in FIG. 9. Immediately following the extrusion die are a pair of cooperating upper and lower shaping wheels 57 and 58 which are driven in unison in any suitable manner. The peripheral face of the lower wheel 58 corresponds to the outer face of fastener section 43 up to about the midpoint of heads 48 and the peripheral face of the upper wheel 57 is provided with circumferentially spaced transverse ribs which correspond in shape to grooves 51 and with transverse recesses which correspond to ribs 50. Thus, a strip 59 of the desired plastic is extruded, which has a uniform cross sectional shape approximating that shown in FIG. 9, and while still in a pressure moldable state has the grooves 51 and ribs 50 formed therein. Other procedures may of course be employed to produce the improved fastener devices.

From the above description, by reason of the nature of the construction of the elements of the fastening device, the legs, heads and projections are resiliently forced into interengaging positions by flexing the resilient opposed elements during assembling, which seek to return to their unstressed position and hence, firmly hold the strips in closed interlocked position.

It is seen that the various interengaging elements of the fastening devices of the present invention extend generally normal or perpendicular from the plane of a flexible longitudinal base or support strip. The separating force lies in a plane normal to the axis of the interlocking elements and hence the possibility of separation in the direction of such pull is practically nil. Further, the strips can be made in any desired width, thickness or density.

While there have been described and illustrated preferred embodiments of the present invention it is apparent that numerous alteration, omissions and additions may be made without departing from the spirit thereof.

I claim:

1. A separable fastener device formed of a resilient material and comprising separably coupled similar first and second fastener sections, each of said fastener sections including a base web, a pair of transversely spaced longitudinally extending vertically directed similar side legs having enlarged heads with upwardly converging top side faces and downwardly converging bottom side faces and longitudinal grooves in opposite faces substantially complementing the corresponding side faces of said enlarged heads, and longitudinally spaced vertically directed projections medially positioned between said side legs, one of said side legs of said first fastener section defining a first longitudinal plug separably engaging a mating longitudinal first socket defined by the space between one of said side legs of said second fastener section and the confronting side faces of said projections of said second fastener section, the other of said side legs of said second fastener section defining a second longitudinal plug separably engaging a longitudinal second socket defined by the space between the other of said side legs of said first fastener section and the confronting side faces of said projections of said first fastener section and said projections of said first and second fastener sections interdigitate with each other and have a width, a portion of which is greater than the width of said sockets, so that when said projections interdigitate contiguous projections are transversely offset.

2. The fastener device of claim 1, wherein said projections have side faces with concavities formed therein below the tops thereof.

3. The fastener device of claim 1 wherein each of said fastener sections has an underface, and a layer of an adhesive material coating said underface.

4. The fastener device of claim 1 including a plurality of said first sections integrally formed in side-by-side relationship and a plurality of said second sections integrally formed in side-by-side relationship.

5. The fastener device of claim 1 wherein each of said fastener sections include another pair of transversely spaced longitudinally extending side legs similar to and extending in an opposite direction from a respective web relative to said side legs of said respective fastener section and longitudinally spaced projections medially positioned between said other pair of side legs and similar to said projections on the other face of said web.

6. The fastener device of claim 1 including a longitudinally extending flexible reinforcing member embedded in each of said fastener sections.

7. The fastener device of claim 1 including an integrally formed web extending along and projecting transversely from each of said fastener sections.

8. The separable fastener device of claim 1 wherein said heads are rounded.

9. The fastener device of claim 8 wherein said first and second sections are integrally formed and longitudinally axially spaced.

10. A fastener device of claim 1 wherein said first and second sections are integrally formed back to back so that each has a common base, with the side legs and projections of each being about 180° offset from each other.

* * * * *