Dec. 22, 1942. G. GRAVE ET AL 2,306,105

ELECTROSTATIC SEPARATOR FOR ORES AND OTHER SUBSTANCES

Filed May 23, 1939 5 Sheets-Sheet 1

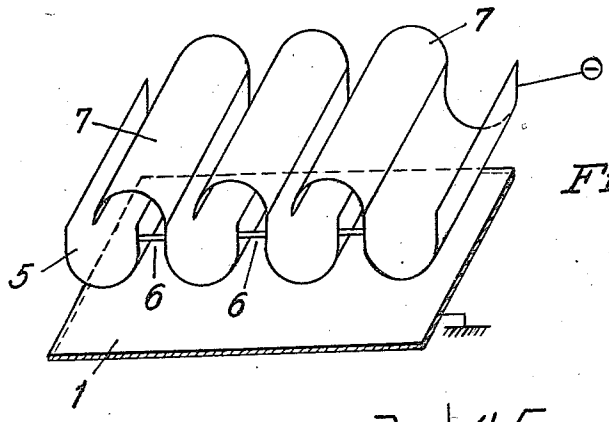

Fig. 1.

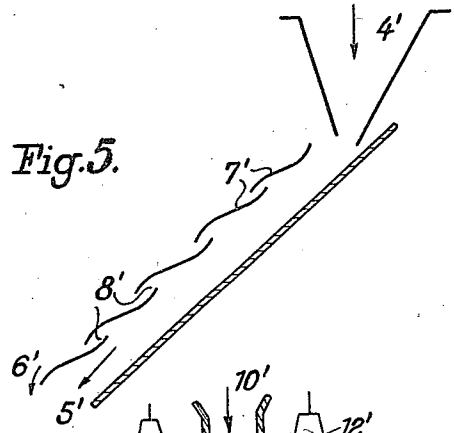

Fig. 5.

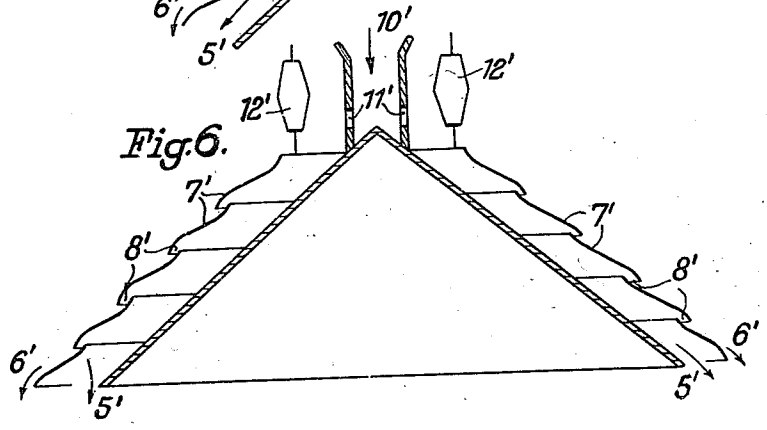

Fig. 6.

Inventors:
Georg Grave,
Alfred Stieler,
Theodor Bantz,
By Potter, Pierce & Scheffler,
Attorneys.

Dec. 22, 1942. G. GRAVE ET AL 2,306,105

ELECTROSTATIC SEPARATOR FOR ORES AND OTHER SUBSTANCES

Filed May 23, 1939 5 Sheets-Sheet 2

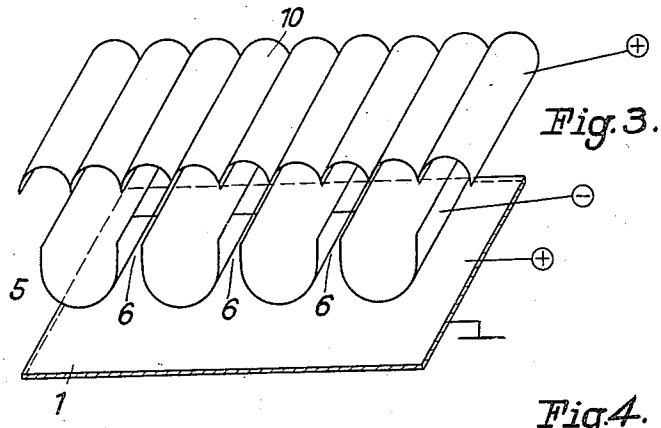

Fig. 3.

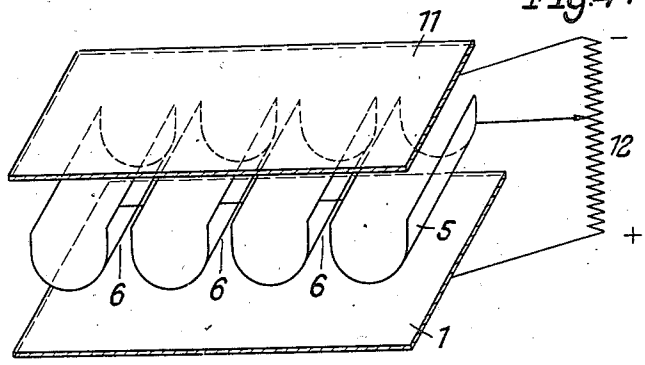

Fig. 4.

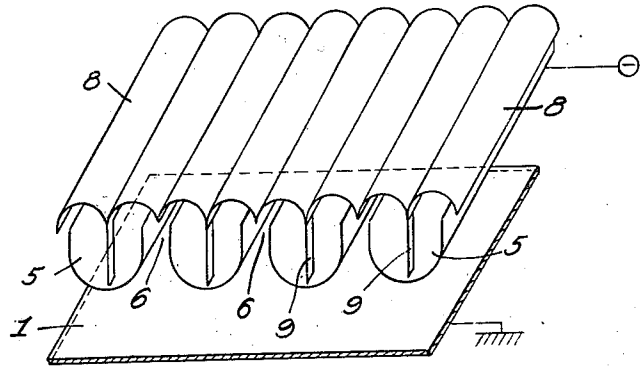

Fig. 2.

Inventors:
Georg Grave,
Alfred Stieler,
Theodor Bantz,
By Potter, Pierce & Scheffler,
Attorneys.

Dec. 22, 1942. G. GRAVE ET AL 2,306,105

ELECTROSTATIC SEPARATOR FOR ORES AND OTHER SUBSTANCES

Filed May 23, 1939 5 Sheets-Sheet 3

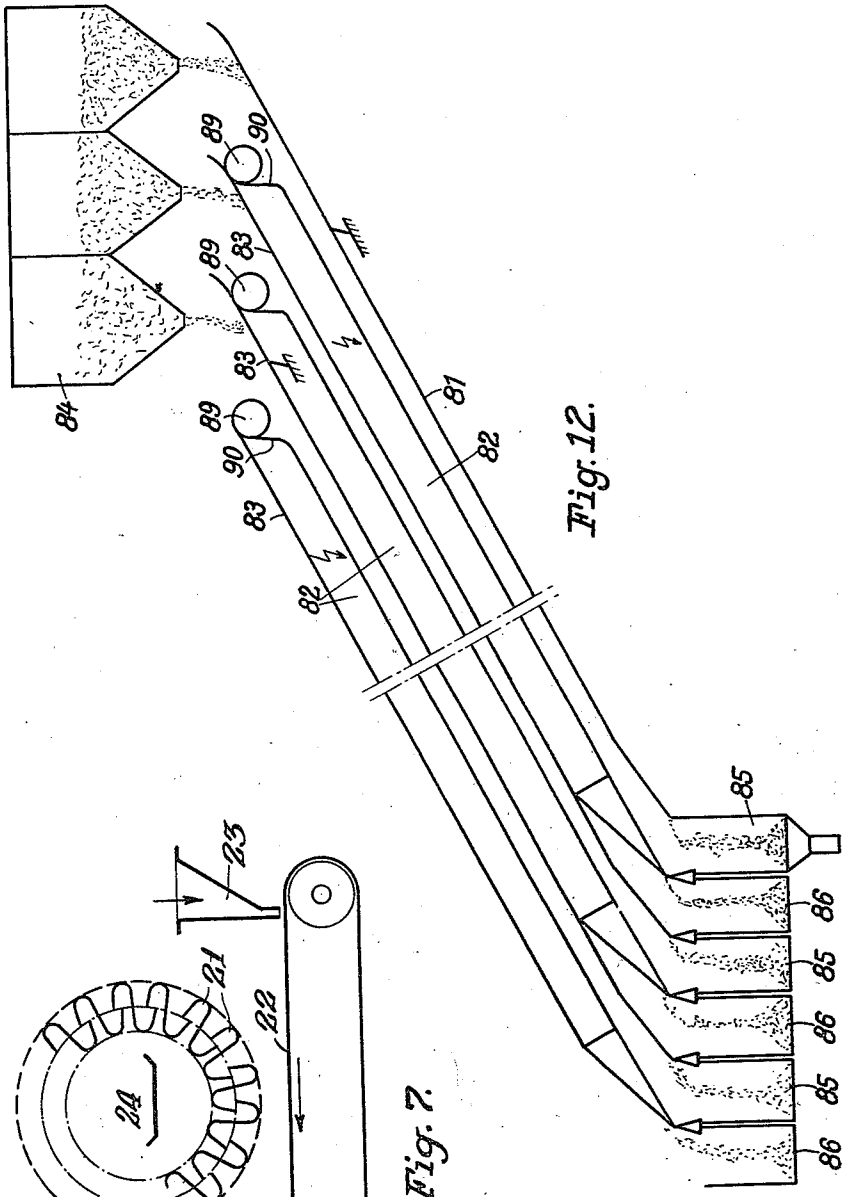

Fig. 12.

Fig. 7.

Inventors:
Georg Grave,
Alfred Stieler,
Theodor Canty,
By Potter, Pierce & Schaffler,
Attorneys

Dec. 22, 1942. G. GRAVE ET AL 2,306,105

ELECTROSTATIC SEPARATOR FOR ORES AND OTHER SUBSTANCES

Filed May 23, 1939 5 Sheets-Sheet 4

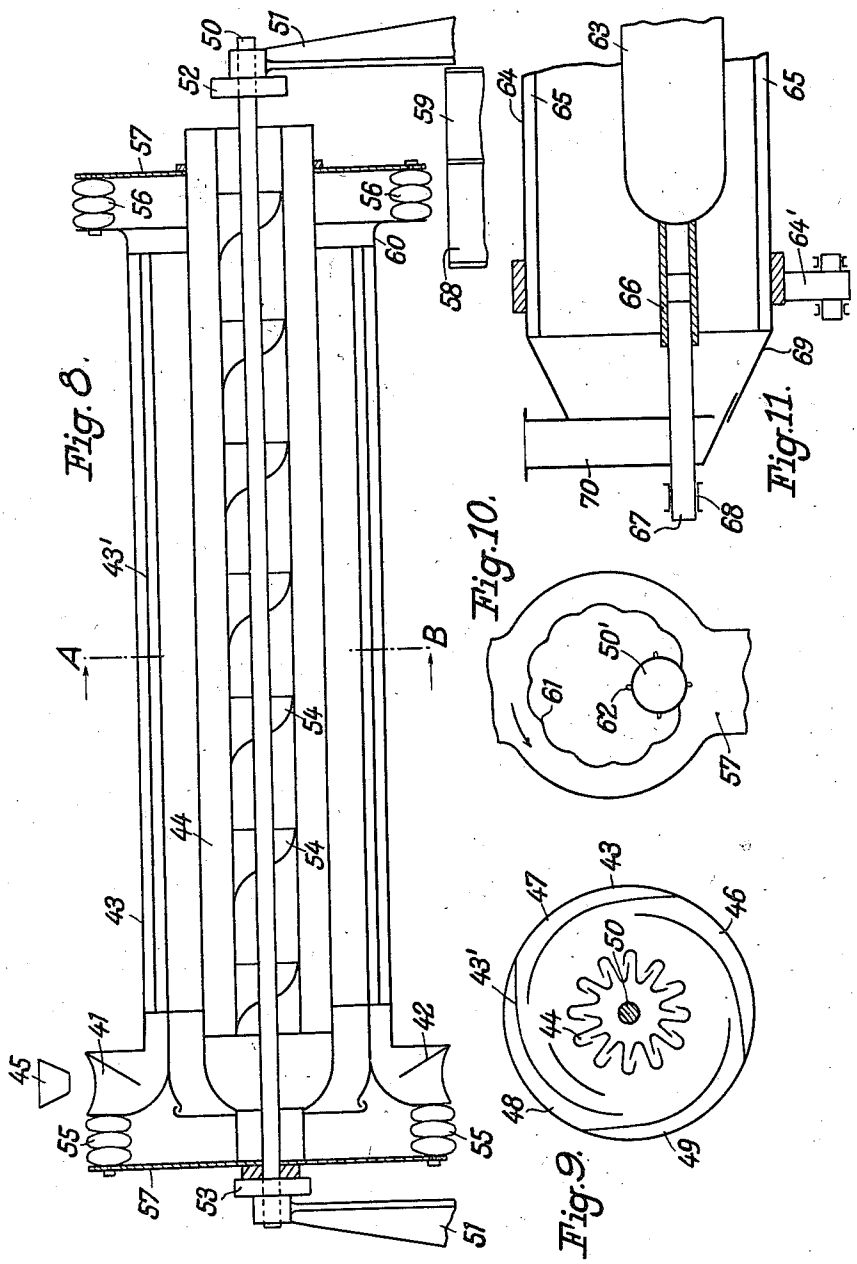

Inventors:
Georg Grave,
Alfred Stieler,
Theodor Bantz,
By Potter, Pierce & Scheffler,
Attorneys.

Dec. 22, 1942. G. GRAVE ET AL 2,306,105

ELECTROSTATIC SEPARATOR FOR ORES AND OTHER SUBSTANCES

Filed May 23, 1939 5 Sheets-Sheet 5

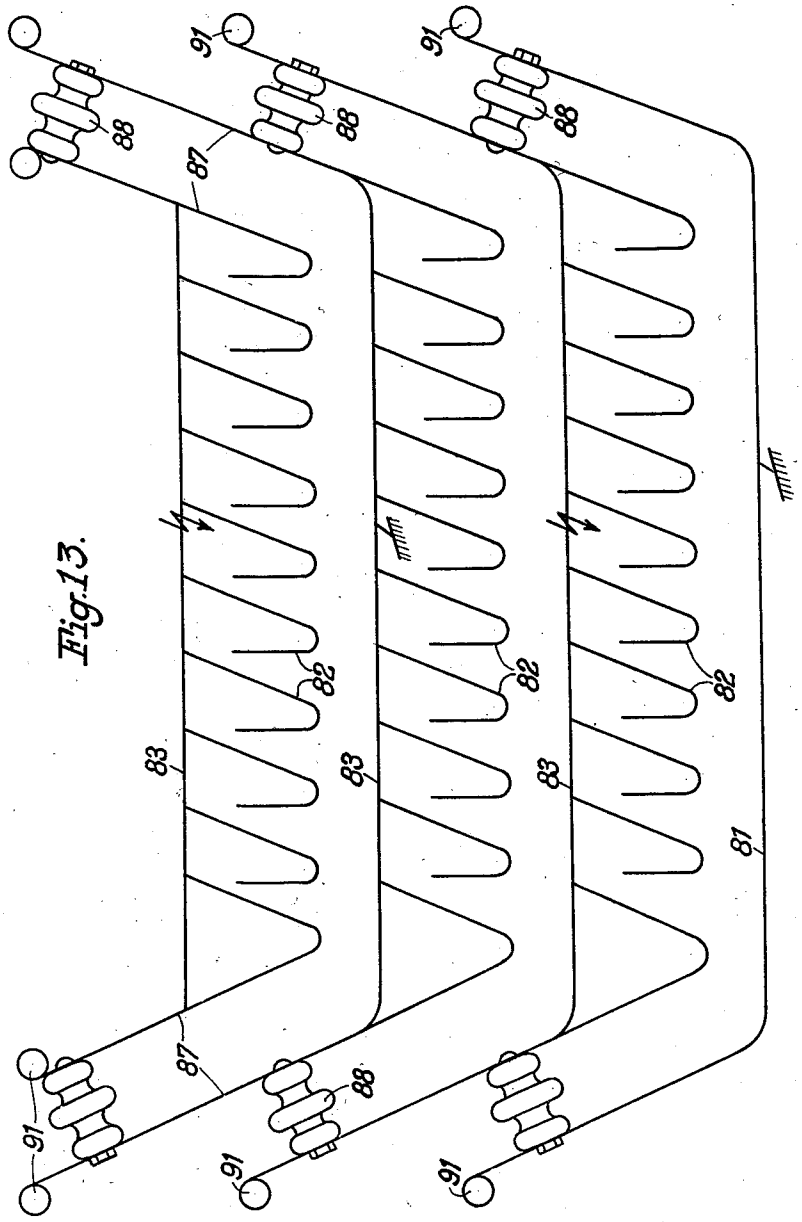

Fig. 13.

Inventors:
Georg Grave
Alfred Stickler
Theodor Bantz
By Potter, Pierce & Scheffler,
attorneys.

Patented Dec. 22, 1942 2,306,105

UNITED STATES PATENT OFFICE

2,306,105

ELECTROSTATIC SEPARATOR FOR ORES AND OTHER SUBSTANCES

Georg Grave, Frankfort-on-the-Main-Heddernheim, Alfred Stieler, Frankfort-on-the-Main, and Theodor Bantz, Frankfort-on-the-Main-Praunheim, Germany; vested in the Alien Property Custodian

Application May 23, 1939, Serial No. 275,264
In Germany May 25, 1938

11 Claims. (Cl. 209—128)

This invention relates to an electrostatic separator for ores and other substances, of the kind comprising two superimposed electrodes of opposite polarity, the upper of which—the electrode attracting the electrically conductive parts of the material—is perforated, while the lower—the electrode repelling the electrically conductive parts of the material—forms the conveying surface for the material.

In contradistinction to known apparatus of this type, in which the perforated electrode consists, for example, of a meshed body after the style of a sieve, the essential feature of the present invention consists in that the top electrode is provided with chambers or surfaces to hold the particles of the material to be separated which fly upwards through the apertures. In this manner complete separation of the repelled or attracted particles from the remainder of the material, and also the separate extraction and withdrawal thereof, are rendered possible.

In carrying out the invention, even a plane metal sheet, perforated after the style of grater with apertures having upwardly directed edges, can be used as a perforated electrode. In this case, the particles flying upwards through the apertures settle on the surfaces of the metal sheet at the side of the apertures. The reception and, above all, the removal of the particles flying upwards away from the bottom electrode surface are still more effective when the top electrode is composed of channels or bowls open at the top and disposed side by side with gaps left free therebetween. These channels or bowls can be provided with deflecting or guide surfaces covering over the gaps, in order to ensure that the particles flying upwards are caught in the channels. In addition, in order further to increase the efficiency, a third electrode surface can be disposed above the perforated electrode, which third electrode advantageously has the same potential, for example earth, as the bottom electrode by which the conducting particles are repelled.

Further embodiments and features of the invention will become apparent from the following description.

The invention renders it possible, preferably presupposing that the two electrodes are disposed in an inclined plane, for the top perforated receiving and withdrawing electrode to be composed of bands or strips superimposed after the style of Venetian blinds. The conducting particles of the material repelled by the bottom electrode and attracted by the top electrode pass outwards through the slits of the blinds and are deflected on to the outer surfaces of the bands or strips, on which they are caught and, when the electrodes are disposed in an oblique plane, as discharged by sliding downwards.

In this arrangement the bottom electrode can be designed as a cone, on the tip of which the material to be separated is charged and which is surrounded concentrically or in a helical line by the blind strips of the top, perforated electrode.

Following up the underlying idea of the present invention, the perforated electrode, provided with receiving chambers or surfaces for the conducting parts of the material, can also be designed as a rotating cylinder, the axis of which is directed transversely to the longitudinal direction of the bottom electrode, or transversely to the direction of movement of the material to be separated on the bottom electrode surface. In this case also use is advantageously made of spaced channels or bowls which lie either in the direction of the axis of rotation of the cylinder or else concentrically thereto or helically around the axis of the cylinder. A cross-sectional profile winding in the shape of an S is particularly advisable for the individual channels, the effect of which is that the top limb of the S of each channel overlaps the bottom limb of the S of the adjoining channel and thus acts as deflecting or guide surface for the particles of the material flying upwards.

The invention also provides the possibility of disposing two or more perforated electrodes, designed as rotating cylinders, serially in the direction of the delivery of the material and of applying different potentials thereto. Within the total course of the separating operation it is thus possible to achieve a sorting or classification which in itself is also subdivided. These two or more electrode cylinders can be located at different, preferably regulable, distances from the bottom electrode, so that in this manner all requirements of operation can be taken into account.

A conveying apparatus, running along the axis of rotation in the interior of the rotating electrode cylinder, in the form of a conveyor belt, a chute, worm or the like, serves to receive and pass on the particles attracted by the perforated cylinder electrode and discharged in proportion to the rotation of the cylinder. The discharge of the particles received by the cylinder electrode can however be effected without such a special conveying apparatus in the interior, by inclining the axis of the cylinder towards the horizontal

or else at the ends of the receiving surfaces or channels for the time being in the lowest position.

The movability of the perforated electrode consequent upon the cylindrical shape affords the advantage that the rotating electrode parts can be conveniently kept clean, after being emptied, by brushing or scraping or by pneumatic means.

In a two-stage or multi-stage plant it is advisable to provide, between two separators intersecting one another at an angle, a deflecting surface, at the point of changing over from one to the other, which is electrically connected with the perforated receiving electrode and which attracts those conducting particles the weight of which prevents or renders difficult separation on the lifting-out principle in the first separator, and deflects them on to the top perforated receiving electrode of the second separator, without obstructing the residual material passed on by the bottom electrode surface of the first separator to the second separator for further treatment. By adjustment of the deflecting surface, for example through a rockable arrangement, it is possible to adjust operation to all conditions occurring in practice.

In the present case also it is advisable to employ a roofed-over S profile for the top perforated electrode, at least in the region of the deflecting or baffle surface, in order to prevent the particles passing, through the impact, on to the top end of the channel or bowl electrode from falling through the slits between the channels. Designing the perforated receiving electrode after the style of Venetian blinds also leads to the desired end.

The invention further provides for accommodating the foregoing rotating cylinder electrode inside a likewise rotating, tubular coacting electrode, whereby substantial advantages are achieved.

The mixture to be separated is continuously circulated in the rotating coacting electrode cylinder, and thus every individual particle is given an opportunity of passing into the range of attraction of the inner cylinder electrode. In contradistinction thereto, the disadvantage exists, when employing a conveyor belt or a flat surface as coacting electrode, that the conducting particles which accidentally come to lie beneath non-conducting particles on the coacting electrode are not attracted at all. A continuous separation of the conducting particles from the non-conducting particles thus takes place, which increases in effectiveness the longer the electrode tube and the slower the passage of the material. It is then no longer necessary to pass the material to be separated over a plurality of electrostatic separators, thereby saving expensive conveying apparatus and other plant.

A further advantage consists in that, owing to the closed construction of the plant, trouble through dust or the like is avoided. Either the outer tubular electrode or the inner cylindrical electrode can be placed under high tension. If the inner electrode be connected to high tension, the external electrode tube, which is earthed and therefore can be touched without danger, acts at the same time as a protective jacket.

A plurality of electrode groups in accordance with the invention, in each of which the material to be separated is introduced at one end and the separated parts of the material are withdrawn at the other end, in parallel planes, can be disposed one above the other in such a manner that a plane surface, on which the perforated, and especially channel-shaped, electrodes are fastened, forms the coacting electrode (acting as conveyor surface) of the higher group. In this manner a multiplication of the effect is obtained, together with advantageous utilisation of the ground area required by the apparatus, and the empty, unutilised spaces are avoided which, for example in a zig-zag arrangement of separators following one over and on the other, must be accepted as unavoidable.

In order to enable the invention to be more readily understood, reference is made to the accompanying drawings which illustrate purely diagrammatically and by way of example various embodiments thereof and in which:

Fig. 1 is a fragmentary isometric view of the electrodes of an electrostatic separator embodying the invention;

Figs. 2, 3 and 4 are partial isometric views of three different embodiments of the invention;

Figs. 5, 6 and 7 are diagrammatic sectional elevations of three additional modifications of the invention;

Fig. 8 is an axial section through still a further embodiment;

Fig. 9 is a cross-section along the line A, B of Fig. 8, viewed in the direction of the arrows;

Fig. 10 shows a modification of Fig. 8;

Fig. 11 is a partial axial section through a further embodiment; and

Figs. 12 and 13 are a side elevation and cross-section respectively of still a further embodiment.

In the embodiment shown in Fig. 1, the reference numeral 1 denotes the bottom electrode which acts as a receiving, conveying or chute surface for the material to be separated and is connected to one pole, for example to the positive pole, of the source of electricity or to earth. The top electrode consists of channel-shaped individual lengths 5, between which are left the slits 6. When a voltage is applied between electrodes 1 and 5, the conducting particles of the mixture contained between the two electrodes move at high speed from 1 to 5 and are passed out of the electrostatic field through the slits 6, while the less or non-conductive particles slowly move to-and-fro between 1 and 5 without leaving the electric field. The particles of material to be separated which fly upwards through the slits 6 are caught by the surfaces lying between the slits 6. By raising the lateral channel walls in a parallel direction along the slits 6, good guidance for the particles flying up is obtained. The catching of the particles flying up in the troughs formed by the upper surfaces of channels 5 is improved by connecting guide shields 7 to the slits 6, each of which shields extends over a channel 5 and guides into the channels the particles thrown upwards through slits 6.

Fig. 2 shows the channels 5 or the slits 6 provided with special deflecting surfaces 8 which are secured, for example by cross-pieces 9, to the channels and are held at a suitable distance.

The separation of the mixture proceeds particularly rapidly if the guide or deflecting surfaces over the channels 5 be connected to an antipole, i. e., if an arrangement such as that shown in Fig. 3 be selected. Above the channel or bowl electrode 5 is located, at approximately the same distance as that between 1 and 5, an electrode 10 which consists of channels and which has the same potential as the bottom electrode 1.

For mixtures having smaller differences in the

conductivity of the various particles, an arrangement like that shown in Fig. 4 is convenient. In this arrangement, the channel or bowl electrode 5 receives an intermediate potential through tapping off a voltage from the potentiometer 12. The influence of the top electrode can, in this arrangement, be intensified or lessened by varying the gaps between the channels 5. The top electrode 11 can in this case be designed as a straight surface or, as in Fig. 3, as a channel or corrugated electrode.

As previously indicated, the influence of the top, perforated electrode can be intensified or reduced by varying the gaps between the channels or bowls.

The distance is advantageously regulated by raising or lowering the top, perforated electrode, although the bottom electrode surface may also be adjusted relatively to the top electrode. In addition, both electrodes may be simultaneously adjusted relatively to one another.

In Fig. 5, the strips 7' of the top electrodes have a tapering curved cross-sectional profile which promotes the deflection and the catching of the attracted particles, while at the mutual overlappings the slits 8' are left open, through which the particles of the material flying upwards and caught by the overlapping portions are deflected on to the outer surfaces of the strips 7'. The material to be separated is charged at 4' and slides down the inclined surface. The conducting particles which are repelled by the inclined electrode and caught by the top electrodes 7' are discharged at 6', while the less or non-conducting particles slide down the inclined electrode and are discharged at 5'.

In the embodiment illustrated in Fig. 6, the bottom electrode surface consists of a cone 9', which the strips of the top, perforated electrode, preferably in the tapering curved profile form 7' of Fig. 5, surround concentrically or in a helical line. The material to be separated is charged at 10' on the tip of the cone and passes through the apertures 11' of the charging device 10' on to the cone surface. The strips 7' are suspended on insulators 12'.

In the embodiment shown in Fig. 7, the channels 21, of S-shaped cross-section, of the perforated electrode form the periphery of a rotating cylinder, the rotational axis of which is directed transversely to the longitudinal direction of the bottom electrode surface 22 designed as a rotating band or transversely to the direction of movement of the material to be separated on the surface 22. The channels 21 are directed in the direction of the axis of the cylinder. The material to be separated is charged at 23, and the particles that have passed into the channels 21 are discharged on to a moving band 24 or other conveying device in the interior of the cylinder. 25 denotes the ejection point for the non-conductive or less conductive particles of the material to be separated.

In the embodiment shown in Figs. 8 and 9, a cylindrical electrode 44 attracting the particles is disposed on a shaft 50, which is mounted at 51 and is rotated, for example, by a belt pulley 52. The electrode 44 lies in a tube 43 forming the coacting electrode and caused to rotate about the shaft 50 of the inner electrode 44, for example by a belt pulley 53. It is naturally also possible to couple both electrodes together and rotate them jointly. The tube 43 is mounted on insulators 55, 56 and is connected to a source of high tension.

For the feeding of the material from the charging hopper 45, a bucket wheel 41 having a number of passage apertures is provided, by means of which the material to be separated can, for example, pass into the four pockets 46, 47, 48, 49. In order to prevent said material from falling back through the inlet apertures, inclined metal plates 42 are disposed in the part 41. In order to obtain good loosening of the material and a constant trickling past beneath the electrode 44, four metal plates 43' are fitted in the rotating tube 43, which form the four pockets 46, 47, 48, 49. The mode of operation of these pockets is such that, for example, the pocket 49 is filled with material on rotation. When it has reached the position 46, the material to be separated lies in the bottom part of the pocket. As the rotation continues, it passes with the material to the position 47. As soon as the position of the pocket 48 is reached, the material begins to trickle out of the pocket and to fall down in a gentle stream. In this favourable condition the attraction by the cylindrical electrode 44 takes place. As the rotation continues, the material not attracted is carried upwards again by a pocket. To the same end of circulation of the material, the tube 43 can also be designed with corrugated walls and without special pockets. The material is caused to progress through cylinder 43 by suitable inclination of the cylinder.

The separated material not attracted passes out of the tube 43 at 60, whence it falls into the chamber 58, while the material from the inner electrode 44 passes into the chamber 59. The material is conveyed out of the rotating cylindrical electrode 44 by a worm conveyor 54 on the shaft 50 which catches separated material falling from above out of the pockets of electrode 44.

The cylindrical electrode 44 can be mounted to be movable instead of fixed. For example, the two end walls 57 can be provided with a recess, as shown in Fig. 10, in which rest the two end bearings of the shaft 50' of the cylinder 44. This recess forms a cradle mounting for the end bearings of shaft 50' of substantially larger inside diameter than the diameter of the bearings. If the end walls 57 now rotate, the inner shaft 50' rolls on them, as it has the tendency always to remain at the lowest point. If the mounting 61 in the end walls 57 be given a scalloped outline as shown in Fig. 10, the cylindrical electrode 44 performs, during the rotation, a dancing movement and at the same time, through the consequent vibrations, attends to thorough cleaning of the electrode channels from adherent dust. The shaft 50' can also be provided with small teeth 62, in order to ensure dependable rotation of the cylindrical electrode 44.

If it be desired to design the inner electrode as a high tension electrode, which affords the advantage of more convenient feeding of the material and safety against contact, the inlet can be effected as shown in Fig. 11. The cylindrical electrode 63, which is similar in construction to electrode 44 of Figs. 8 and 9, is rigidly connected, in this arrangement, to the shaft 67 by an insulating tube 66, so that on the outside there is no high tension. The outer tubular electrode 64 is mounted on rollers 64', as is customary, for example, in rotary tube furnaces. The inlet side 69 of the cylinder 64 can be made conical. The stationary inlet hopper 70 is connected to the rotating cone 69 in such a manner as to be gastight. The material thus slides directly into the pockets 65 of the cylinder 64.

In the embodiment shown in Figs. 12 and 13,

two further electrode groups are disposed in parallel planes above the bottom group composed of the electrodes **81** and **82**. The arrangement is such that the perforated, channel-like receiving electrodes **82** are fastened to a plane surface **83** which acts as conveying surface and coacting electrode for the next higher electrode group. Details of the cross-sectional formation can be seen in Fig. 13. The electrode groups **81**, **82** and **83**, **82** respectively are alternately connected to high tension and to earth, as indicated in the drawing.

At the top end of the electrode groups is located the charging device **84** for the material to be separated, while the receiving devices **85**, **86** for the separated portions of the material are disposed at the bottom ends of the individual groups.

The side walls **87** of the electrode surfaces **83** are drawn upwards, in order to screen the electrostatic field at this point. Between the raised side walls are located insulators **88**. The channel electrodes **82** closed at the top end at **90** are screened at that point by round bodies **89**. Similar screening bodies **91** are also located at the ends of the lateral extensions **87**.

We claim:

1. An electrostatic separator for ores and other substances comprising two superposed electrodes of opposite polarity, the lower electrode providing a conveying surface for the material to be separated, and the upper electrode having a plurality of openings for the passage of separated material out of the space between the electrodes, the portions of the upper electrodes between said openings being shaped to provide conveying means for the separated material, and directing means overlying said openings to direct material passing through said openings onto the upper surface of said upper electrode between said openings.

2. An electrostatic separator as defined in claim 1 in which said directing means comprise extended portions of said upper electrode.

3. An electrostatic separator as defined in claim 1 in which said directing means is energized at a potential different from the potential of said upper electrode.

4. An electrostatic separator as defined in claim 1 in which said directing means is energized at a polarity different from the polarity of said upper electrode.

5. An electrostatic separator as defined in claim 1 in which said upper electrode comprises a plurality of channel-shaped members open at the top and positioned side by side with gaps between adjacent channels.

6. An electrostatic separator as defined in claim 1 in which said upper electrode comprises a plurality of channel-shaped members open at the top and positioned side by side with gaps between adjacent channels, and said directing means comprise a plurality of channel-shaped members invertedly positioned above the gaps between the channel members comprising said upper electrode.

7. An electrostatic separator as defined in claim 1 in which the upper electrode is in the form of a rotatable cylinder and conveying means are positioned within said cylinder for receiving separated material from said cylinder and conveying said material therefrom.

8. An electrostatic separator as defined in claim 1 in which the upper electrode is in the form of a rotatable cylinder, the axis of rotation of said cylinder being transverse to the direction of flow of material along the lower electrode and conveying means are positioned within said cylinder for receiving separated material from said cylinder and conveying said material therefrom.

9. An electrostatic separator as defined in claim 1 in which the upper electrode is in the form of a rotatable cylinder mounted in the interior of a rotatable cylindrical electrode member serving to convey the material through the separator and conveying means are positioned within said first cylinder for receiving separated material from said first cylinder and conveying said material therefrom.

10. An electrostatic separator as defined in claim 1 in which the upper electrode is in the form of a rotatable cylinder mounted in the interior of a rotatable cylindrical electrode member serving to convey the material through the separator, said outer electrode member including members upon its interior surface adapted to drop material to be separated adjacent the inner electrode and conveying means are positioned within said first cylinder for receiving separated material from said first cylinder and conveying said material therefrom.

11. An electrostatic separator as defined in claim 1 in which the upper and lower electrodes are in the form of concentric cones.

GEORG GRAVE.
ALFRED STIELER.
THEODOR BANTZ.