Nov. 4, 1952 R. D. DODGE 2,616,547

REVERSIBLE RIBBON FEEDING MECHANISM FOR TYPEWRITING MACHINES

Filed June 21, 1947 4 Sheets-Sheet 1

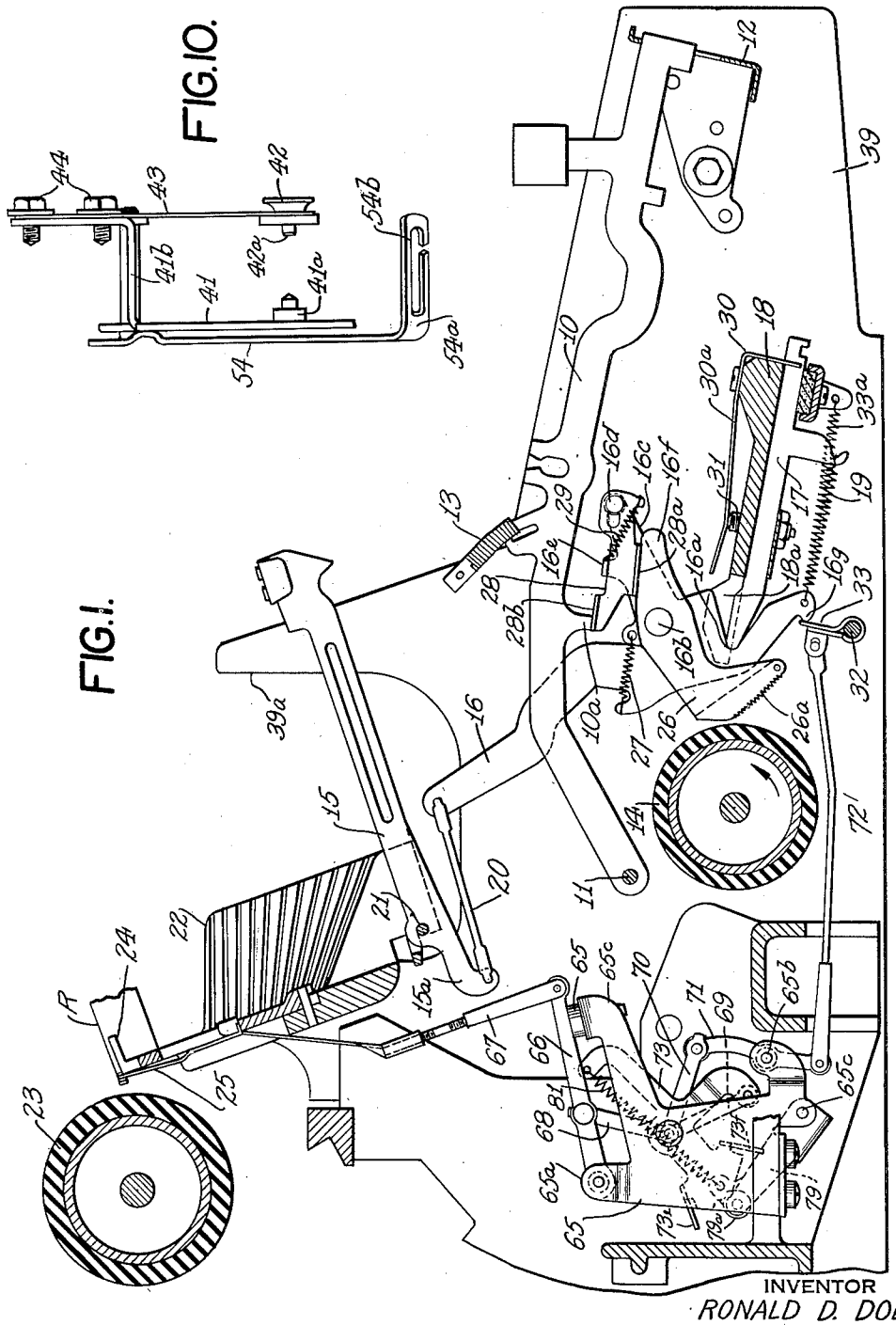

INVENTOR
RONALD D. DODGE
BY
ATTORNEY

Nov. 4. 1952

R. D. DODGE

2,616,547

REVERSIBLE RIBBON FEEDING MECHANISM
FOR TYPEWRITING MACHINES

Filed June 21, 1947

4 Sheets-Sheet 2

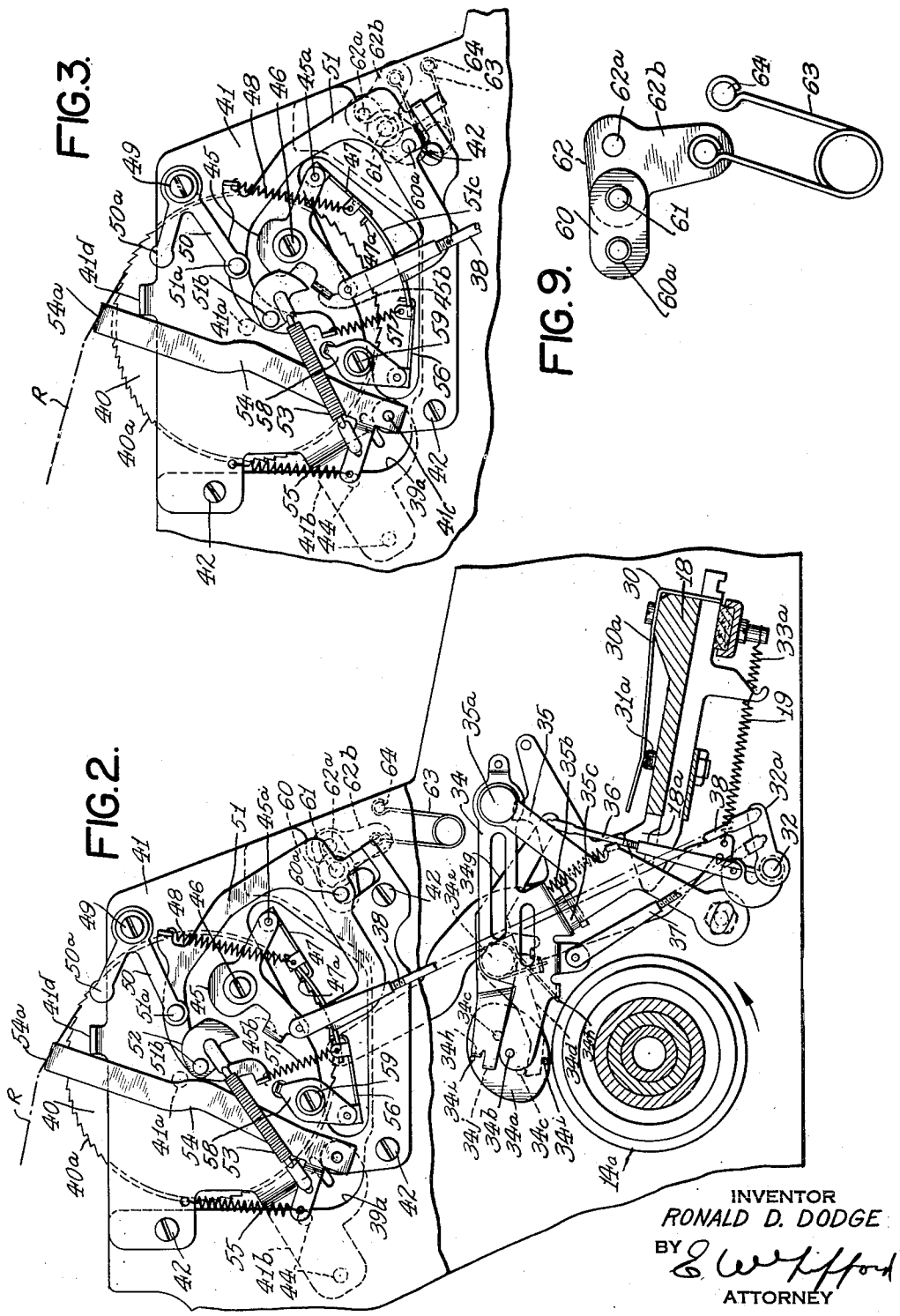

INVENTOR
RONALD D. DODGE
BY E. W. Clifford
ATTORNEY

FIG. 4.

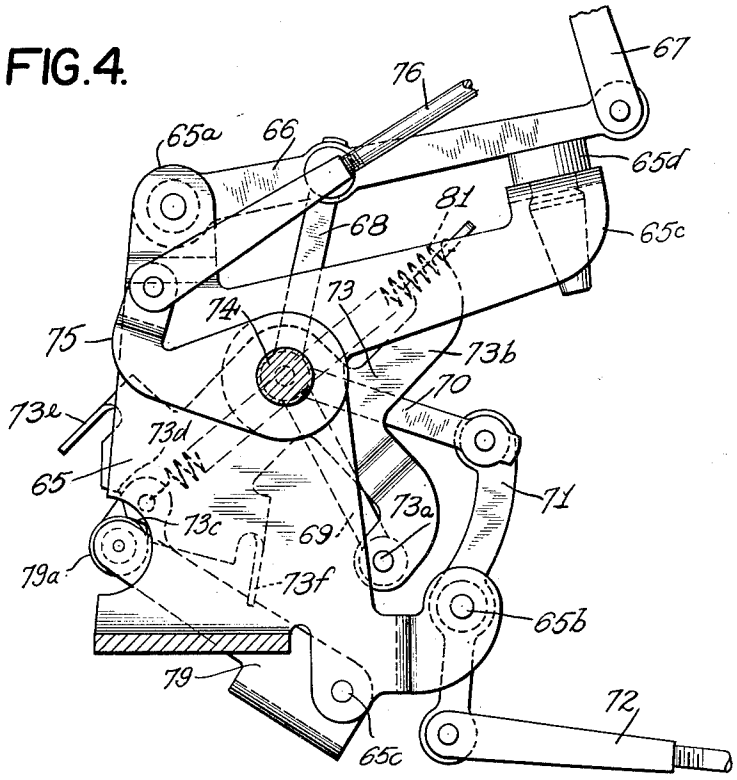

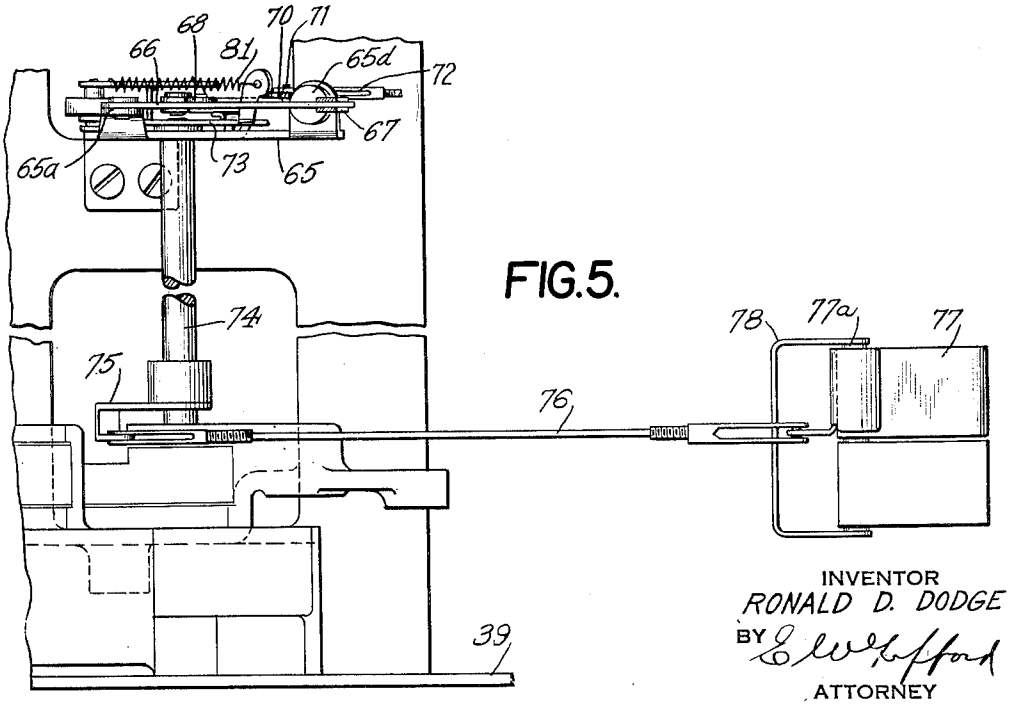

FIG. 5.

INVENTOR
RONALD D. DODGE
BY E. W. Bafford
ATTORNEY

FIG.6.

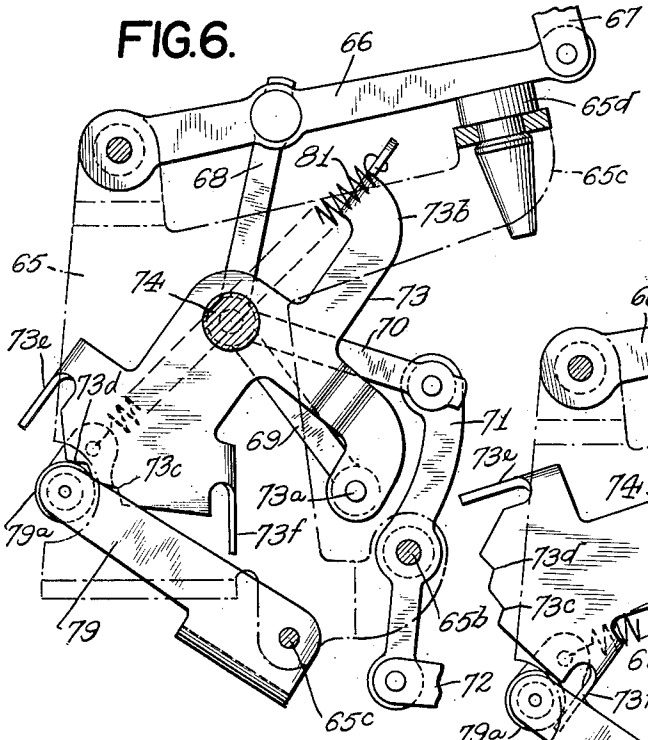

FIG.8.

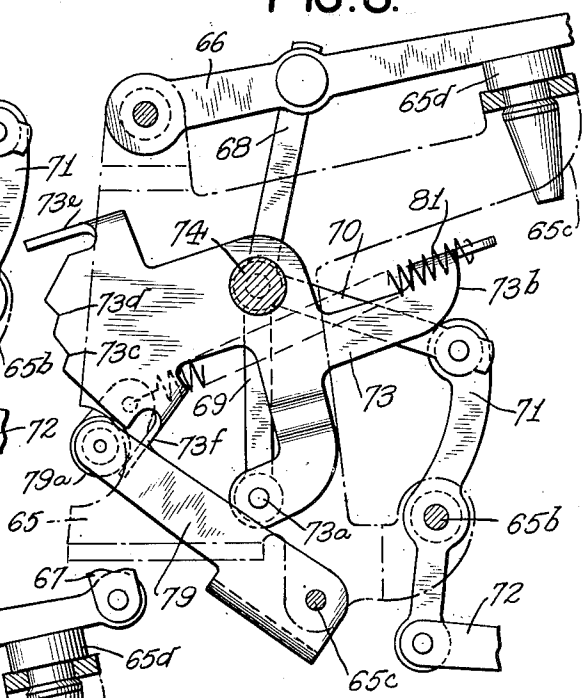

FIG.7.

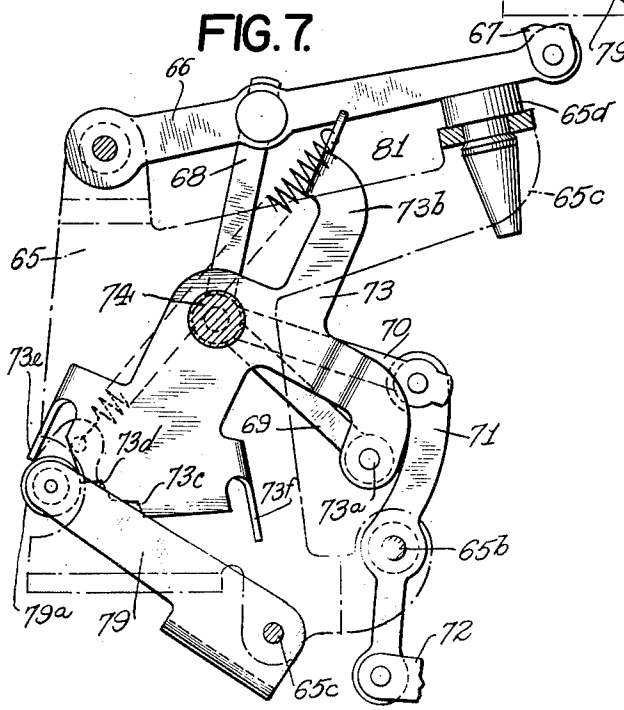

INVENTOR
RONALD D. DODGE
BY E. W. Lifford
ATTORNEY

Patented Nov. 4, 1952 2,616,547

UNITED STATES PATENT OFFICE

2,616,547

REVERSIBLE RIBBON FEEDING MECHANISM FOR TYPEWRITING MACHINES

Ronald D. Dodge, Poughkeepsie, N. Y., assignor to International Business Machines Corporation, New York, N. Y., a corporation of New York

Application June 21, 1947, Serial No. 756,174

2 Claims. (Cl. 197—162)

1

This invention relates to typewriting machines.

The principal object of the present invention is to provide an improved ribbon mechanism.

An object is to provide a ribbon mechanism which is operated by a source of power other than the type bars or the type bar operating trains.

An object is to provide a ribbon mechanism which is suitable for use in power operated typewriters.

An object is to provide a ribbon mechanism which is more positive and reliable in its action.

Other objects of the invention will be pointed out in the following description and claims and illustrated in the accompanying drawings, which disclose, by way of example, the principle of the invention and the best mode, which has been contemplated, of applying that principle.

In the drawings:

Fig. 1 is a verticle section of a power operated typewriter and shows the ribbon vibrator mechanism.

Fig. 2 is a vertical elevation showing the power means for actuating the ribbon mechanism and the ribbon feeding mechanism associated with the left hand ribbon spool.

Fig. 3 is a detail view showing the ribbon feeding mechanism of Fig. 2 in reversed condition.

Fig. 4 is a large scale view of the ribbon vibrator mechanism appearing in Fig. 1 and shows the mechanism in position to effect printing through the lower zone of the ribbon.

Fig. 5 is a plan view of the mechanism shown in Fig. 4.

Fig. 6 is a view showing the ribbon vibrator mechanism adjusted to print through the middle zone of the ribbon.

Fig. 7 is a view showing the ribbon vibrator mechanism adjusted to print through the upper zone of the ribbon.

Fig. 8 shows the ribbon vibrator mechanism in condition for typing stencils.

Fig. 9 is a detail view of the reversing shaft.

Fig. 10 is a plan view of the means for pivotally supporting the left hand ribbon spool.

In Fig. 1 there is shown a vertical section of a power operated typewriter. The character keys 10 are pivoted on a cross rod 11 and guided at their front ends by a suitable key comb 12, the keys being restored by springs 13. The keys 10 control power mechanism which includes the power roller 14 normally rotating in the direction of the arrow when the machine is in use. Each key controls its own power unit, all of which

2

coact with the power roller 14 to operate the corresponding type bars 15.

The power unit includes a sub-lever 16 (Fig. 1) which is formed with a deep notch 16*a* by means of which the sub-lever is pivoted on an individual fulcrum bar 17 longitudinally adjustably mounted in the support bar 18. The support bar 18 is slotted at 18*a* to receive both the sub-levers 16 and the rounded ends of the associated fulcrum bars 17. The sub-levers 16 are held in engagement with their fulcrum bars 17 by means of springs 19 which are anchored to suitable lugs formed in the fulcrum bars 17. The upper end of each sub-lever 16 is connected by link 20 to an arm 15*a* formed in the associated type bar 15. Only one type bar 15 and one sub-lever 16 with its associated parts are shown in Fig. 1 but it will be understood that there is a set of these parts for each character key 10 in the machine.

The type bars 15 are pivotally mounted by means of a curved pivot wire 21 (Fig. 1) in the usual segment 22 attached to and forming part of the usual type basket (not shown). This type basket may be case shiftable for the purpose of printing upper case characters or, if desired, the platen 23 may be shiftable for the same purpose. The segment 22 may be provided with the usual type guide 24 and the ribbon vibrator 25 which is vertically guided on the type guide 24 and normally occupies the position of Fig. 1 in which it is below the printing line. The ribbon vibrator is actuated and controlled by novel means hereinafter to be described.

Each power unit, besides the sub-lever 16, includes an L-shaped cam 26 pivoted at 16*b* on the sub-lever 16 and urged in a counterclockwise direction by a spring 27 anchored to an ear formed in the cam 26 and an ear formed in the sub-lever 16. The sub-lever 16 is formed with an extension 16*c* on which is pivotally slidably mounted at 16*d* an interposer 28 having the offset lug or shoe 28*a* engaging the cam 26 and a similar lug 28*b* engaging an extension 10*a* formed in the key 10. The interposer 28 is urged in a clockwise direction by a spring 29 which is anchored to an ear formed in the interposer 28 and to a stop lug 16*e* formed in the extension 16*c*, and the spring also holds the interposer 28 in its left hand position (Fig. 1) with the pivot 16*d* at the right hand end of the slot by means of which said interposer is mounted on the pivot 16*d*.

The depression of the key 10 rocks the interposer 28 in a counterclockwise direction (Fig. 1) and, through the shoe 28*a*, urges the cam 26 in a

clockwise direction, thereby causing the serrated tread portion 26*a* of the cam to engage the power roller 14 and be gripped thereby. The power roller then rotates the cam 26 and, due to the eccentricity of the cam tread with respect to the pivot 16*b*, the sub-lever 16 will be rocked in a clockwise direction against the tension of spring 19 and thereby actuate the type bar to printing position. Near the end of the actuation of the cam 26 by the power roller, a nose portion 16*f* formed in the cam 26 engages an adjustable spring prong 30*a* formed in the spring comb 30 and is arrested.

As is common in typewriting machines the power unit does not propel the type bar the full distance to the printing point with the power unit coupled to the driver throughout the whole cycle, but the adjustment of the spring prong 30*a* is such that the nose piece 16*c* will strike said prong before the type bar reaches the printing point and the remainder of the stroke of the type bar will be effected by virtue of the inertia of the power unit and the type bar. The point at which this takes place is determined by adjusting the spring prong 30*a* up or down by means of an adjusting screw 31 which is individual to each spring prong 30*a* and there is a spring prong for each power unit. The spring prongs 30*a* are formed as part of a comb spring 30 secured to the support bar 18. This spring comb 30 also is slotted to space apart and guide the adjustable fulcrum bars 17.

When the nose piece 16*c* strikes the spring prong 30*a* the cam tread 26*a* will be disengaged from the power roller 14 by a motion of translation in which the nose piece 16*c* slides to the right (Fig. 1) over the spring prong 30*a*. As soon as the tread 26*a* is released from the power roller 14 the spring 27 snaps the cam 26 back to the position of Fig. 1 relative to the sub-lever 16.

During the actuation of the type bar 15 by the power unit, hereinafter collectively referred to as the power unit 16, the interposer 28 is carried in a clockwise direction. If the key 10 should be held depressed, the left hand end of the lug 28*b* on the interposer will engage the right side of the extension 10*a* and the parts will stay in this position as long as the key is held depressed, thereby preventing the power unit from repeating. A slight clearance is provided between the extension 10*a* and the lug 28*b* in the normal position of the parts so that, when the key 10 is released, the spring 29 will snap the interposer 28 back to the position of Fig. 1, permitting another release of the power unit by depression of the key 10.

Ordinarily in a typewriting machine the ribbon mechanism and the ribbon vibrator are actuated by universal bars which are either driven directly by the power units or are actuated by the keys or certain parts of the trains of connections from the type bars to the keys. In the present case the ribbon mechanism is actuated by a separate power unit which is merely rendered effective by the operation of the type bar power units 16 through a universal bar actuated by the power units.

Pivotally mounted on the framework of the machine (Figs. 1 and 2) is a cross-shaft 32 on which is pivotally mounted a universal bar 33 in the form of a vane. This universal bar is engaged by nose pieces 16*g* formed in the sub-levers 16 whereby, each time a power unit 16 is operated, the universal bar 33 will be actuated in a counterclockwise direction (Figs. 1 and 2) against the tension of a restoring spring 33*a* anchored to the universal bar 33. This movement of the universal bar 33 is utilized to trip a power unit generally designated 34 in Fig. 2.

This power unit 34 includes a suitable frame pivoted at 35*a* (Fig. 2) to a fixed frame piece 35 suitably supported in the machine framework. An elliptical cam 34*a* is pivoted at 34*b* in the frame of the cam unit 34 and cam 34*a* is provided with two pins 34*c* located on diametrically opposite sides of the pivot 34*b* and normally one or the other of the pins is engaged by an arm 34*d* pivoted at 34*e* in the frame of the power unit 34. This arm 34*d* is urged in a clockwise direction by a torsion spring 34*f* partly coiled around the pivot 34*e* and hooked to lugs formed in the arm 34*d* and in the frame of the power unit 34, respectively.

Also pivoted at 34*e* (Fig. 2) is a trip lever 34*g* having an off-set lug 34*h* coacting with one of two lugs 34*i* formed in the cam 34*a* on diametrically opposite sides of the pivot 34*b*. The spring actuated lever 34*d* pressing on one of the pins 34*c*, tends to rock the cam 34*a* in a clockwise direction, thereby holding the lug 34*i* in engagement with the lug 34*h* and in this position of the parts there is a small clearance between the tread of the cam 34*a* and an enlarged portion 14*a* formed in or suitably secured to the power roller 14.

The universal bar 33 is connected by a link 36 (Fig. 2) to the trip lever 34*g* whereby a counterclockwise motion imparted to the universal bar 33 by the power units 16 will actuate the trip lever 34*g* in a clockwise direction and disengage the lug 34*h* from the lug 34*i*. At the same time a lug 34*j* formed in the trip lever 34*g* is positioned in the path of movement of the second lug 34*i*. The shaft 32 is provided at its ends with the arms 32*a*, one of which is connected by a link 37 to a lug formed in the frame of the power unit 34. When the elliptical cam 34*a* is released in the manner just described, its tread is brought into engagement with the portion 14*a* of the power roller 14 which thereupon rotates the cam 34*a* in a clockwise direction (Fig. 2). Due to the eccentricity of the lobes of the cam 34*a*, a clockwise rocking motion is imparted to the frame of the power unit 34, thereby drawing the link 37 upwardly and rocking the shaft 32 in a counterclockwise direction.

The power unit 34 is restored by a spring 35*b* (Fig. 2) anchored to the frame of the power unit and to a lug carried by frame 35. This restoring movement is limited by a resilient bumper 35*c* on which the frame of the cam unit rests and which is carried by frame 35.

Attached to each of the arms 32*a* is a link 38, one for each ribbon spool, and these links actuate two separate ribbon feeding mechanisms, each associated with a ribbon spool. The drawings show the ribbon feeding mechanism located on the left hand side of the machine but it will be understood that the two mechanisms are similar in construction and a description of one will suffice for both. The side plates 39 of the main framework are formed with a large open cut-out portion 39*a* (Fig. 1) to accommodate the ribbon spools of which the left hand spool is designated 40 in Figs. 2 and 3. The ribbon feeding and reversing mechanism for each spool is mounted as a unit in the cut-out 39*a* of the associated side frame 39 by means of a plate 41 attached by means of screws 42 to the plate 39.

Riveted to the plate 41 (Figs. 2, 3, and 10) is a shouldered stud 41*a* which serves as one pivot

for the ribbon spool 40, the other pivot consisting of a stud 42a formed in the end of a finger button 42 carried by leaf spring 43, fixedly mounted by means of the clamping screws 44 to a bracket extension 41b formed in the plate 41. By grasping the button 42 (Fig. 10) and pulling it to the right, the ribbon spool may be readily inserted in or removed from the machine.

The link 38 for the left hand spool 40 is connected to one arm of a lever 45 (Figs. 2 and 3) pivoted on a stud 46 carried by the plate 41. One arm of the lever 45 has pivoted at 45a a feed pawl 47 which is urged in a clockwise direction by a spring 48. The feed pawl 47 is formed from sheet metal and has an off-set lug 47a engaging the usual ratchet teeth 40a formed in the flanges of the ribbon spool 40 when the feed mechanism is in condition to feed the ribbon on the left hand spool as indicated in Fig. 2.

It is apparent that each time a type bar 15 is operated by a power unit 16 the universal bar 33 also will be operated and will cause the power unit 34 to be rendered operative in the manner described above to impart an oscillation to the shaft 32, thus thrusting both links 38 upwardly and to the left. If the pawl 47 in Fig. 2 is in engagement with the teeth 40a, the aforesaid movement of the links 38 will cause the lever 45 associated with the pawl 47 to be actuated in a clockwise direction, thereby feeding the ribbon spool 40 in a clockwise direction. It will be understood that the levers 45 for both feeding mechanisms will be oscillated each time a power unit 16 is active to operate a type bar 15 but whether or not a ribbon spool is actuated by its associated pawl 47 will depend upon whether or not the pawl is permitted to engage the ratchet teeth 40a.

Means are provided for causing the pawls 47 to engage the teeth 40a of the ribbon spools in alternation so as to cause one ribbon spool to feed until the other is exhausted and then render the other spool effective to feed and this mechanism is controlled by the tension produced in the ribbon when the free running spool is exhausted. Pivoted at 49 on the plate 41 is a lever 50 to which is pivoted at 51a a plate 51 shaped somewhat like a letter G reversed right to left. Pivoted at 51b on the plate 51 is an interposer 52 which is connected by a spring link 53 to one arm of a tension lever 54 pivoted at 41c to the plate 41. The tension lever 54 is formed with a ribbon guide lug 54a having an open ribbon guiding slot 54b (Fig. 10) formed therein and is urged in a clockwise direction against a stop lug 41d by a spring 55.

The left hand spool 40 is shown in free running condition in Fig. 3, that is, with the ribbon R unwinding from the spool and pawl 47 retracted. Due to the fact that the ribbon is secured to the spool, there will come a time when the ribbon will be no longer capable of unwinding from the spool 40 and this will anchor the ribbon and, due to the tendency of the ribbon to straighten, will rock the tension control lever 54 in a counterclockwise direction (Fig. 3). Due to the link connection 53 interposer 54 will be rocked clockwise into the path of an off-set lug 45b formed in the lever 45. Consequently the next oscillation of the lever 45 will cause the plate 51 to be shifted upwardly from the position of Fig. 3. The plate 51 is formed with a long off-set lug 51c, like the cross-bar of a "G," disposed between the pawl 47 and the teeth 40a so that, in the position shown in Fig. 3, the pawl 47 is prevented from engaging

said teeth but when the plate 51 is shifted upwardly, as just described, to the position of Fig. 2, the pawl 47 will be permitted to engage the teeth 40a. This renders pawl 47 effective to drive the ribbon spool 40 with each clockwise oscillation of the lever 45 as in Fig. 2 which illustrates the left hand spool feeding mechanism in a driving condition.

In order to prevent retrograde movement of the spool which is being driven by the operative pawl 47 there is provided a pawl 56 constructed somewhat similarly to the pawl 47 and similarly engaged by the lug 51c. The pawl 56 is urged in a counterclockwise direction by a spring 57 anchored to a lug formed in the plate 51 and a lug formed in the pawl. The pawl 56 is pivotally mounted on a fixed dog 58 secured to the plate 41 by means of a screw 59, the dog 57 being prevented from turning on the plate 41 by a lug formed on the dog which extends into a hole formed in the plate 41.

The plate 51 for the left hand spool 40 has a loose pin connection 60a (Figs. 2, 3, and 9) with an arm 60 carried by a cross-shaft 61 journaled in the framework. The plate 51 for the right hand spool (not shown) is similarly connected at 62a to an arm 62 disposed on the opposite end of the shaft 61 adjacent the plate 41 for the right hand spool feeding mechanism so that the pins 60a, 62a for the respective ribbon spools are approximately 180° apart on the shaft 61 (Fig. 9). It is apparent that, when the plate 51 is shifted upwardly from the position of Fig. 3 to the position of Fig. 2 in the manner described above, the plate 51 for the right hand ribbon spool will be drawn downwardly and thereby disengage the pawls 47 and 56 for the right hand spool from the ratchet teeth 40a thereon, thereby rendering that spool free running. This condition of the parts may be visualized in Figs. 2 and 3 by considering Fig. 3 as showing the mechanism for the right hand spool. It is apparent that the tension controlling lever 54 for the spool which is in free running condition renders such spool in driving condition whenever the spool becomes exhausted and tension is built up by the ribbon sufficiently to cause the tension controlling lever 54 thereof to shift in a counterclockwise direction.

In order to enable the operator to change the direction of feed of the ribbon, the levers 50 are formed with finger pieces 50a which may be grasped by the operator and pressed up or down as desired.

In order to hold the plates 51 in their alternate shifted positions the arm 62 is provided with an extension 62b (Figs. 2, 3, and 9) engaged by one branch of a toggle spring 63, the other branch being pivoted on a fixed stud 64 carried by the framework. The toggle spring 63 is fairly stiff with the result that the actuating lever 45 and the interposer 52 of either spool 40 need only raise the associated plate 51 a little beyond the dead center position of the toggle spring 63 which thereafter becomes effective to snap the plate 51 to the alternate position.

One of the advantages of the ribbon mechanism described above is it imposes a very small but constant load on the type bar operating mechanism, particularly at the times when the ribbon is being reversed. In ordinary ribbon mechanisms the full power necessary to effect the reversal of the ribbon feeding mechanism imposes an additional load on the type bar mechanism, causing the type bar to print lighter while the ribbon is reversing than at other times, and

this is particularly true in power operated typewriters in which the force of the blow is beyond the control of the operator insofar as actuation of the keys is concerned. This is due to the fact that the power units for operating the type bars are adjusted to give an even impression of the type characters when one of the ribbon spools is running free as is normally the case, except during the brief periods when the ribbon is reversing. The result is that the additional load imposed on the type bar operating mechanism at the time of reversal imposes a considerable additional load thereon and slows up the operation of the type bars sufficiently to cause them to print light. If the ribbon mechanism is very sluggish in reversing as is very common in practice, it might happen that several characters may print lighter than others.

Since the power unit 34 operates invariably with a fixed but relatively large amount of power and this power is applied directly to the ribbon mechanism, the ribbon reverses immediately and the additional load is placed on the power roller 14 which has considerable surplus power for the purpose and is not applied to any particular type bar operating train. The tread portion 14*a* of the power roller which actuates the cam unit 34 is somewhat larger in diameter than the main part of the power roller in order to cause the ribbon mechanism to be actuated at a somewhat faster rate than the type bar in order to insure that the ribbon will be fully fed before the next type bar reaches printing position, and also to insure that the ribbon will be reversed immediately so as to minimize striking characters in succession through the same spot on the ribbon.

The ribbon vibrator 25 (Fig. 1) is actuated by mechanism shown in the lower left hand corner thereof and illustrated in successive manually set positions in Figs. 4 to 8. Mounted on the main framework near the middle of the machine is a frame 65 which extends vertically and has an offset lug 65*a* on which is pivoted the lever 66, the free end of which is connected by a link 67 to the ribbon vibrator 25. Pivoted to the lever 66 is a link 68 which, with a similar link 69, forms a toggle and the common pivot of the toggle link 68, 69 is connected by a shift link 70 to a shift lever 71 pivoted at 65*b* to the frame 65. The lower arm of the lever 71 is connected by a link 72 to the universal bar 33 near its midpoint. Since the universal bar 33 is actuated clockwise each time a character is printed, the link 72 will be thrust to the left in Figs. 4 to 8, thereby rocking the lever 71 clockwise and drawing the link 70 to the right. This tends to straighten the toggle 68, 69 and thereby rock the lever 66 counterclockwise to elevate the link 67 and the ribbon vibrator 25. The height to which the ribbon vibrator 25 is elevated depends upon the position of the pivot for the lower end of the toggle link 69. For this purpose the link 69 is pivoted at 73*a* to a control lever 73 secured to a shaft 74 journaled in the plate 65. The shaft 74 extends toward the left hand side plate 39 (Fig. 5) and is provided with an arm 75 connected by a link 76 to a control key or tablet 77. This tablet is suitably journaled for vertical rocking movement on the pivot 77*a* carried by a bracket 78 suitably fixedly mounted in the main framework. By flipping the tablet 77 up or down on the pivot 77*a* the link 76 may be moved selectively to right or left to control the movement of the ribbon vibrator. Normally the

common pivot of toggle 68, 69 is coaxial with shaft 74 so that the ribbon vibration is not disturbed when tablet 77 is moved by hand.

Besides the normal retracted position of the ribbon vibrator 25 in which the ribbon R is located below the writing line, there are four other possible positions of the ribbon vibrator consisting of a stencil position in which the ribbon is not moved far enough to be interposed in the path of a type bar and three other positions in which the type strikes through one of three zones on the ribbon, namely, a zone along the upper edge of the ribbon, a middle zone, and a zone along the lower edge, in order that the ribbon may be uniformly exhausted.

Fig. 4 illustrates the position of the mechanism when the ribbon vibrator is elevated to next-to-minimum height to effect striking of the type through the upper zone adjacent the upper edge of the ribbon. It is apparent that with constant angularity in movement of the lever 71 under the influence of the universal bar 33, the common pivot for the links 68, 69, 70 will move the lever 66 upwardly only a relatively small amount in Fig. 4, due to the fact that the lower pivot 73*a* occupies the lowest position but one of the four possible positions which it can take under control of the lever 73. If the lever 73 is now rocked counterclockwise a small amount the pin 73*a* will be raised to the position of Fig. 6 in which the angularity of the links 68, 69 has been increased. In this position the constant motion imparted to the common pivot for the toggle 68, 69 by the link 70 will cause the lever 66 to be elevated a greater distance than in Fig. 4 and the type will strike through the middle zone of the ribbon. When the lever 73 is rocked the maximum distance counterclockwise as in Fig. 7, the pin 73*a* is elevated still further and the ribbon vibrator will likewise be raised a further extent and cause the type to strike through the lower zone of the ribbon. When the lever 73 is set in the position of Fig. 8 the toggle 68, 69 is very nearly straight and the motion of the common pivot has very little effect in raising the lever 66; in fact, the lever 66 is first raised slightly and then pulled down slightly and this motion is insufficient to raise the ribbon vibrator far enough to elevate the ribbon to the printing line and is used when typing stencils. Hence, this position will be termed the stencil position.

The lever 70 is held in its various positions by means of a detent lever 79 which is pivoted at 65*c* in the frame 65 and is urged in a clockwise direction by a spring 81 anchored to a lug formed in the lever 79 and to a lug formed in an extension arm 73*b* of the lever 73. The detent arm 79 is provided with a roller 79*a* which may engage either of two notches 73*c*, 73*d* to hold the lever 73 in the positions of Fig. 4 and Fig. 6, respectively. The lever 73 is provided with the bent-over stop lugs 73*e* and 73*f* which not only limit the rotation of the lever 73 to approximately 45° but also yieldingly hold the lever in these limiting positions, due to the wedging of the roller 79*a* between the lugs and the edge of the lever 73. In order to reduce noise due to the dropping of the ribbon vibrator 25, the frame 65 is formed with an extension arm 65*c* to which is attached a resilient bumper 65*d* which may be made of rubber or a resilient synthetic plastic of suitable characteristics.

While there have been shown and described and pointed out the fundamental novel features of the invention, as applied to a preferred em-

bodiment, it will be understood that various omissions and substitutions and changes in the form and details of the device illustrated and in its operation may be made by those skilled in the art without departing from the spirit of the invention. It is the intention, therefore, to be limited only as indicated by the scope of the following claims:

What is claimed is:

1. A ribbon feeding mechanism for power operated typewriters and like machines having a main power actuator and power units for operating the type bars comprising a universal bar actuated each time one of said power units is operative, a ribbon feeding mechanism, and a power unit actuated by said main power actuator and rendered effective by said universal bar for actuating said ribbon feeding mechanism.

2. In a typewriting machine, typing means including a series of type bars and an inking ribbon therefor, a series of character keys for controlling the typing means, a main power actuator, power units for operating the type bars and selectively engaged with the main power actuator by selective operation of said keys; mechanism for feeding said ribbon including a pair of ribbon spools and a pair of oscillatable members, one for each ribbon spool, for feeding said spools, and including shiftable disabling means associated with each spool for rendering the feeding mechanism operative and inoperative, said disabling means being interconnected whereby disabling the feeding mechanism with respect to either spool renders the feeding mechanism effective with respect to the other; means responsive to exhaustion of the ribbon from said spools; a pair of coupling devices, one for each spool and operated by the exhaustion responsive means for coupling the oscillatable members to the shiftable disabling means, said coupling devices being rendered effective to shift the disabling means to disable the feeding mechanism with respect to the spool which is full and render the feeding mechanism effective with respect to the spool which is exhausted; a power unit for actuating said feeding mechanism and having a normally idle element operable by the power actuator to operate said oscillatable members in unison, and a universal bar actuated by any of said first named power units for rendering said last named power unit operable by the power actuator.

RONALD D. DODGE.

REFERENCES CITED

The following references are of record in the file of this patent:

UNITED STATES PATENTS

Number	Name	Date
936,257	Rutishauser	Oct. 5, 1909
1,089,042	Burchett	Mar. 3, 1914
1,196,622	White	Aug. 29, 1916
1,602,757	Dorsey	Oct. 12, 1926
1,680,135	Dobson	Aug. 7, 1928
1,722,937	Myers	July 30, 1929
1,800,854	Barr	Apr. 14, 1931
1,820,903	Avery	Sept. 1, 1931
1,922,991	Thompson et al.	Aug. 15, 1933
2,152,848	Helmond	Apr. 4, 1939