United States Patent

[11] 3,597,966

[72] Inventor Albert A. Heyman
Owings Mills, Md.

[21] Appl. No. 841,793
[22] Filed July 15, 1969
[45] Patented Aug. 10, 1971
[73] Assignee Maryland Cup Corporation
Owings Mills, Md.

[54] LID-FITTING GAUGE
13 Claims, 9 Drawing Figs.

[52] U.S. Cl. 73/88, 73/150
[51] Int. Cl. G01b 5/30, G01b 19/08
[50] Field of Search ..... 73/141, 88 B, 102, 150 A

[56] References Cited
UNITED STATES PATENTS

1,758,688	5/1930	Cowley	73/102
1,819,719	8/1931	Schopper et al.	73/102
2,332,818	10/1943	Smith	73/102
2,469,013	5/1949	Sobota	73/102
2,930,229	3/1960	Sobota	73/102

Primary Examiner—Richard C. Queisser
Assistant Examiner—John Whalen
Attorney—Birch and Birch

ABSTRACT: A lid-fitting gauge comprises a member supported in a horizontal position having an annular beaded edge to simulate the beaded edge of a cup. The member has a vertical opening through which a plunger is disposed. The rotatable plunger carries a weight which has a skirt and to which it is secured, the lower edge of which slopes and is provided with graduated index marks. In one form of the invention the sloping edge comprises a series of vertically stepped downwardly facing shoulders. In another form it is simply a gradually sloping helical edge. A post is secured to the disc below the skirt edge for supporting the weight initially on its lowest downwardly facing step. Rotation of the weight is then effected until the post abuts the skirt edge at a point which is evaluated by markings on the skirt as a function of the degree of stretch of the lid.

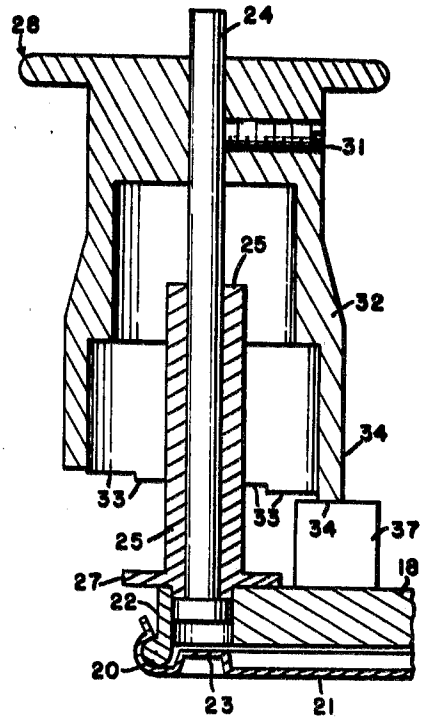

Patented Aug. 10, 1971 3,597,966

2 Sheets-Sheet 1

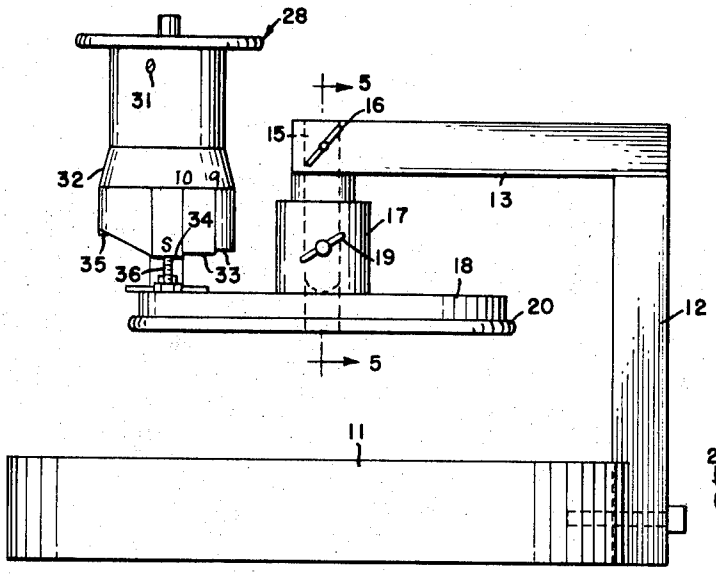

FIG. 1.

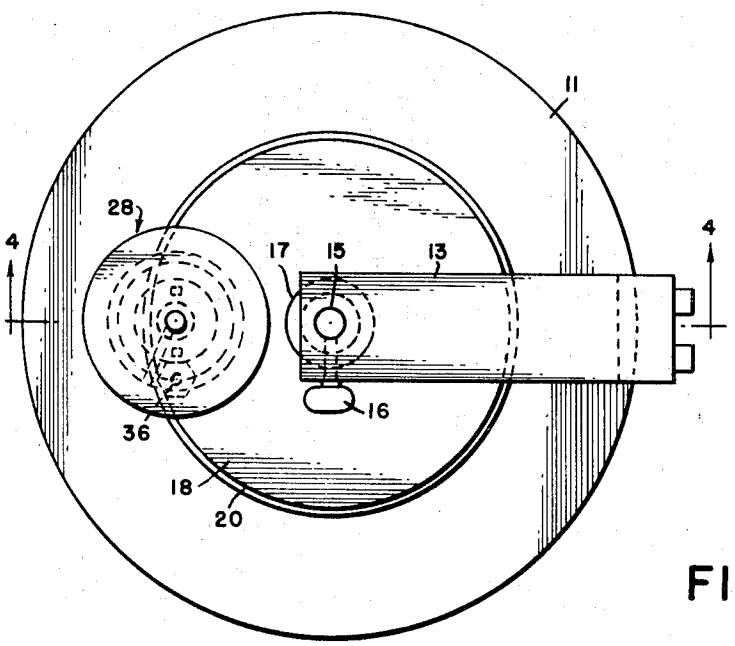

FIG. 2.

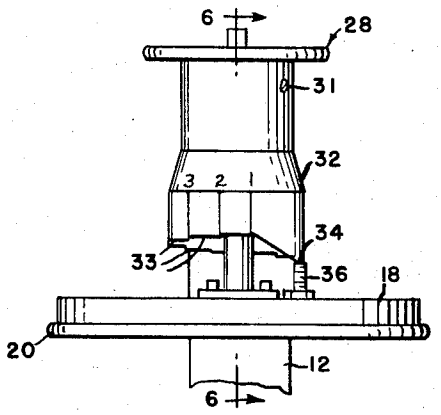

FIG. 3.

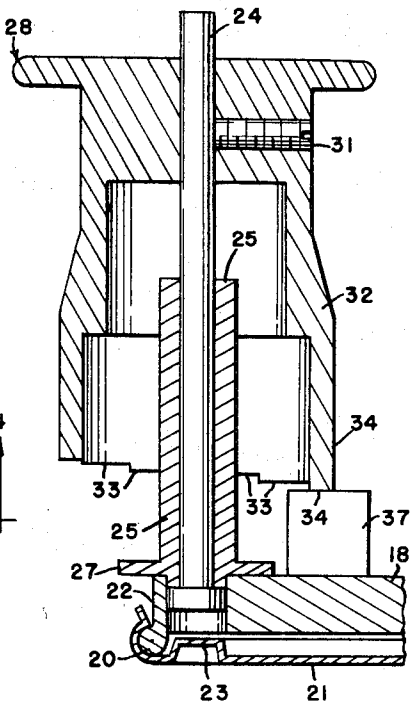

FIG. 6.

INVENTOR
ALBERT A. HEYMAN

BY Albert J. Kramer

ATTORNEY

FIG. 4.

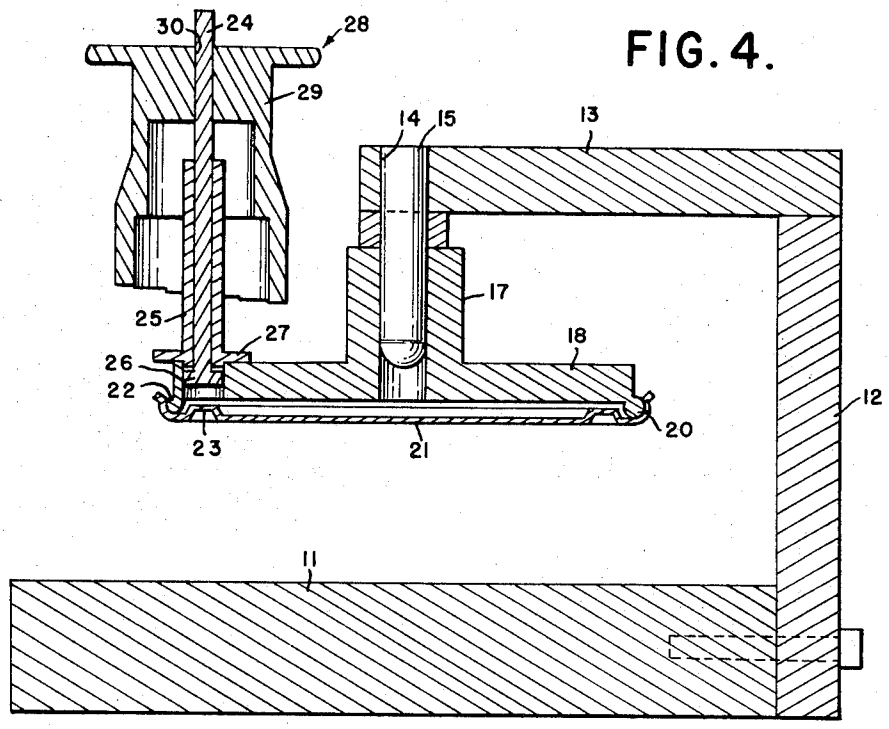

FIG. 5.

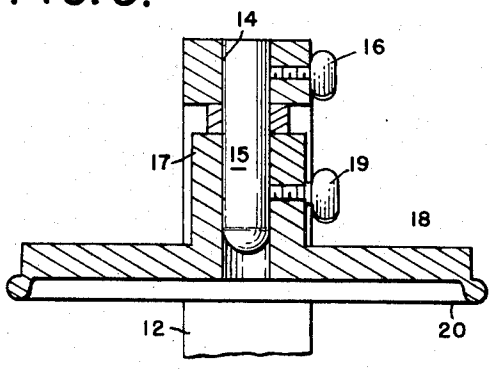

FIG. 7.

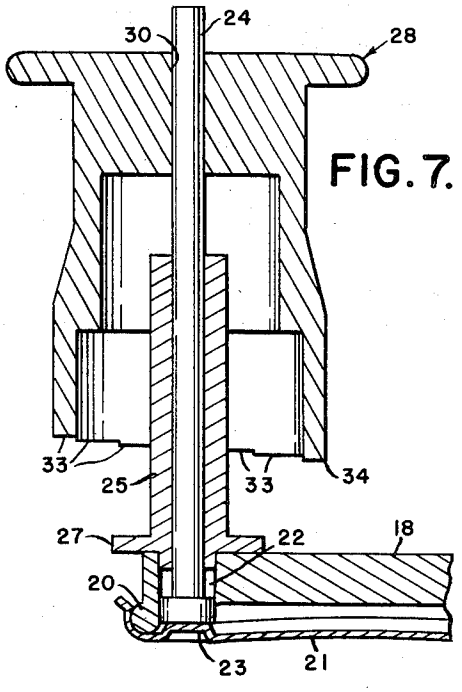

FIG. 8.

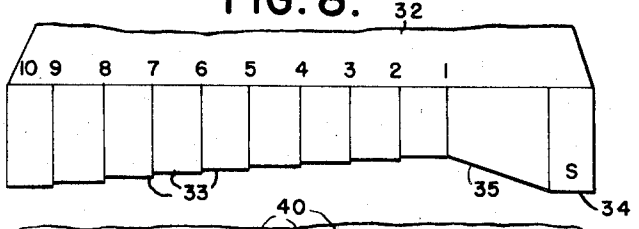

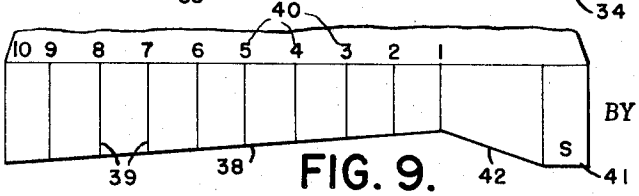

FIG. 9.

INVENTOR
ALBERT A. HEYMAN

BY Albert J. Kramer

ATTORNEY

LID-FITTING GAUGE

This invention relates to gauges and it is more particularly concerned with gauges for testing the fit of certain flanged lids on containers.

In the manufacture of lids, such as flanged plastic lids, for snap engagement with the beaded rims of containers to which they are to be applied, various factors enter into the proper fitting of the lid. Plastic lids, for example, vary with the plastic mixture from which they are made, the operation of the plastic extruder, and other factors, all of which must be controlled to provide a standard of quality for the lids. However, it is difficult to judge the relative fitting qualities of such lids and the general object of this invention is the provision of a gauge which can be used to test the fitting characteristics of such lids to determine relative quality.

Another object of the invention is the provision of a gauge of the type mentioned which can be used to quickly determine the fitting characteristics of a lid on a container in relation to a fixed standard of quality.

Other objects of the invention are the provision of such a gauge which is relatively simple to use, sturdy in construction, has few moving parts and is not likely to get out of working order.

These and still further objects, advantages and features of the invention will be apparent from the following description considered together with the accompanying drawing. In the drawing:

FIG. 1 is a side elevational view of an embodiment of the invention.

FIG. 2 is a top plan view of the embodiment.

FIG. 3 is a side elevational view of a fragmentary portion of the embodiment.

FIG. 4 is a sectional view along the line 4–4 of FIG. 2 with a lid to be gauged attached.

FIG. 5 is a cross-sectional view along the line 5–5 of FIG. 1.

FIG. 6 is an enlarged view of a portion of the embodiment, generally along the line 6–6 of FIG. 3, with a lid to be tested attached.

FIG. 7 is a view similar to FIG. 6 with the gauge member 28 removed from bearing post 36, the full weight resting upon the lid.

FIG. 8 is a developed view of the stepped skirt portion of the cylindrical member.

FIG. 9 is a developed view similar to FIG. 8 of a modified helical form of the skirt portion.

Referring with more particularity to the drawing in which like numerals designate like parts, the embodiment illustrated comprises a base member 11, a vertical support 12 at one side, and a horizontal arm 13 extending cantileverwise from the top of support 12 over the base member 11.

The inner end of the arm 13 has a vertical aperture 14 for receiving a rod 15. The rod 15 is secured in the aperture by means of a setscrew 16. The rod extends below the arm 13 to receive the flanged hub 17 of a horizontal disc 18. The disc is fixed in place on the rod 15 by means of a setscrew 19.

The outer lower edge of the disc carries a continuous annular bead 20 which corresponds to the roller rim of a container and onto which a lid 21 to be tested is snapped.

At the outer edge of the disc, a vertical aperture 22 is provided to accommodate the flanged lower end 23 of a vertical weight carrying rod 24. The rod 24 is slidably carried in a sleeve 25, the lower tip 26 of which fits in the top of the aperture 22. A flange 27 on the sleeve supports it in the vertical position on the disc 18. The upper end of the rod 24 carries a cylindrical gauge member 28.

The member 28 has an upper end wall 29 which is provided with an aperture 30 to engage the rod and it is permanently secured to the rod by means of a setscrew 31. The portion of the member 28 below the wall 29 is a hollow skirt 32, the bottom edge of which is in the form of a series of stepped shoulders 33 numbered, say, from 1 to 10. An extra larger shoulder 34, lowest point of skirt, is provided as a setting point.

Between the setting shoulder 34 and the highest indexed point "1" the edge 35 of the skirt is sloping to provide a smoother transition from the setting shoulder 34 to the "1" shoulder, or to the point where plunger rod 24 first engages the lid and starts exerting pressure on lid which pressure takes up all slack between lid and annular bead 20 on disc 18 thus locking lid tight onto disc. At this point weight-carrying plunger moves downward an amount proportional to the weakness or strength of lid.

A bearing post 36 is mounted on the disc beneath the edge of the skirt 32 whereby the weight of the member 28 and rod 24 can be carried by the post.

To use the device the weight member is rotated to bring setting shoulder to rest on post 36. A lid to be gauged is placed on the beaded edges 20 and the gauge member is rotated off its supporting post 36. Gauge member slides down to where plunger 24 engages lid, stretches same and stops when post 36 engages a numbered step. The particular shoulder at which this occurs, say number 5, is noted for comparison with other lids.

The modification illustrated in FIG. 9 comprises helically shaping the lower edge 38 of the skirt portion instead of as a series of stepped shoulders. Index lines 39 are provided along the helical line to designate index values 40. In this form of the invention, the helical edge extends from the highest index point marked "1" to the lowest point marked "10." The lowest index point "10" is adjacent the seating shoulder 41 and a sloping edge 42 extends from the shoulder 41 to the highest index point "1."

I claim:

1. A lid-fitting gauge for testing flexible lids having a member comprising a beaded plate which simulates a container with which the lid may be used and which supports the lid, means for applying a force tending to unseat the lid from the plate through a predetermined distance, means for increasing said distance, and means for indicating the distance required to unseat the lid, as a measure of the fitting quality of the lid.

2. A lid-fitting gauge as defined by claim 1 in which the beaded plate of the member for supporting the lid comprises a beaded edge on the member for engaging the lid.

3. A lid-fitting gauge as defined by claim 1 in which there is included post means for supporting the member with the beaded edge in a horizontal position.

4. A lid-fitting gauge as defined in claim 1 in which the member is provided with a vertical aperture adjacent its periphery for passage of a weighted vertical plunger.

5. A lid-fitting gauge as defined by claim 4 in which a weight is carried by the plunger, said weight having a skirt, the lower edge of the skirt having a sloping bottom edge and means connected to the disc for supporting the weight by contacting different points along the edge.

6. A lid-fitting gauge as defined by claim 5 in which the bottom edge of the skirt comprises an incremental series of vertically stepped shoulders.

7. A lid-fitting gauge as defined by claim 5 in which the bottom edge of the skirt is helical.

8. A lid-fitting gauge as defined by claim 5 and means for adjusting the position of the weight on the plunger longitudinally.

9. A lid-fitting gauge as defined by claim 5 and means for slidably supporting the plunger in vertical position on the disc.

10. A lid-fitting gauge as defined by claim 5 in which graduated index markings are associated with the sloping bottom edge.

11. A lid-fitting gauge as defined by claim 8 in which one section of the skirt edge comprises an initial setting shoulder and a removable member for supporting the weight on the bead member at said shoulder substantially an interval above said post means while the position of the plunger is adjusted relative to the weight so as to effect impending contact of the plunger with the lid.

12. A lid-fitting gauge as defined by claim 2 in which the bead member is supported by releasable means to permit substitution of different size bead members for different size lids.

13. A lid-fitting gauge as defined by claim 11 in which the edge of the skirt extends helically from the setting shoulder to an initial index point of the skirt.