US 20070299308A1

(19) United States

(12) Patent Application Publication

(10) Pub. No.: US 2007/0299308 A1

(43) Pub. Date: Dec. 27, 2007

Fujikura et al.

(54) INSERTION ASSISTING TOOL FOR ENDOSCOPE

(76) Inventors: **Tetsuya Fujikura**, Saitama-shi (JP); **Hirotaka Kawano**, Saitama-shi (JP)

Correspondence Address:
HARNESS, DICKEY & PIERCE, P.L.C.
P.O. BOX 8910
RESTON, VA 20195 (US)

(21) Appl. No.: 11/892,615

(22) Filed: Aug. 24, 2007

Related U.S. Application Data

(62) Division of application No. 11/001,181, filed on Dec. 2, 2004.

(30) **Foreign Application Priority Data**

Dec. 5, 2003 (JP) 2003-407979
Dec. 9, 2003 (JP) 2003-410641
Mar. 29, 2004 (JP) 2004-96451
Nov. 5, 2004 (JP) 2004-322795

Publication Classification

(51) Int. Cl.
A61B 1/01 (2006.01)

(52) U.S. Cl. 600/115

(57) **ABSTRACT**

An insertion assisting tool for an endoscope into which an insertion section of the endoscope is inserted from a base end portion side, comprising: a fluid sealing device which seals a space between a base end part of the insertion assisting tool and the endoscope insertion section, the space being formed while the insertion section of the endoscope is inserted into the base end portion side.

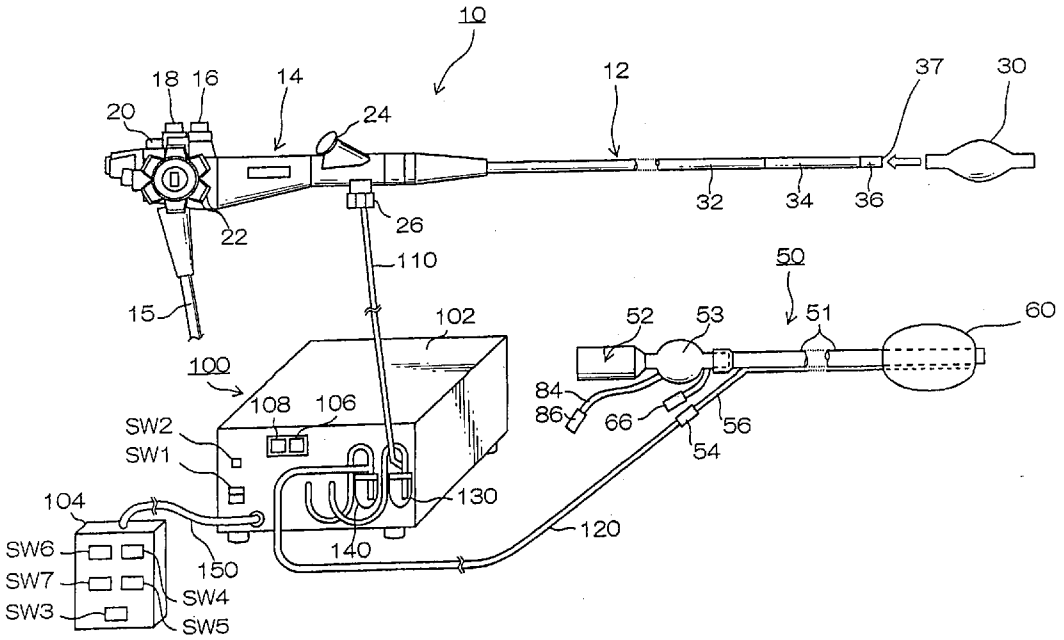

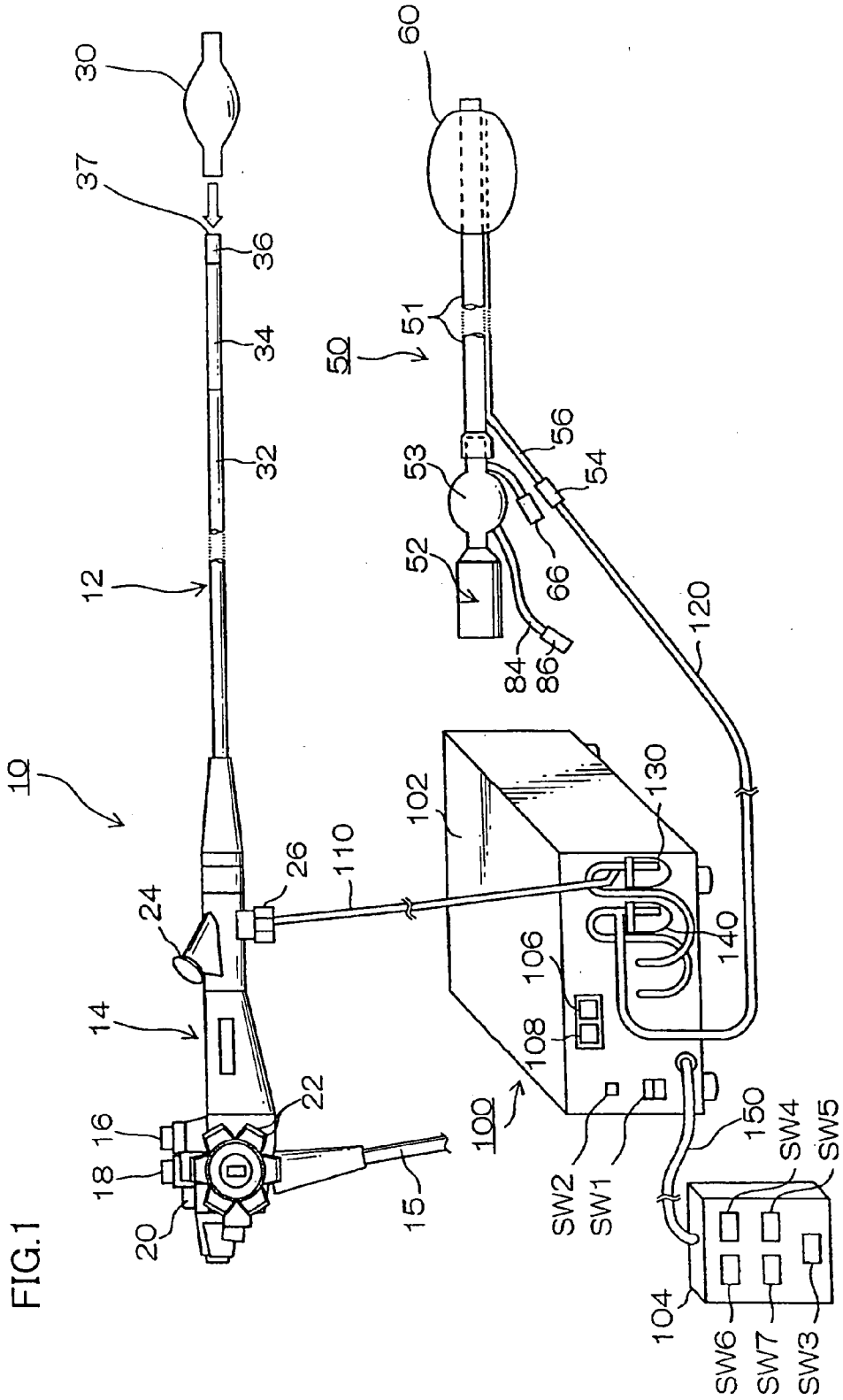
10
12
14
15
16
18
20
22
24
26
30
32
34
36
37
50
51
52
53
54
56
60
66
84
86
100
102
104
106
108
110
120
130
140
150
SW1
SW2
SW3
SW4
SW5
SW6
SW7

FIG.1

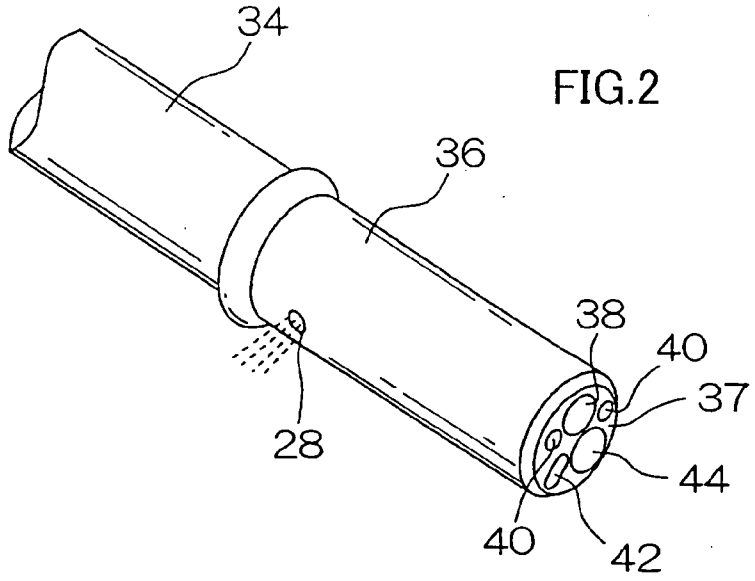

FIG.2

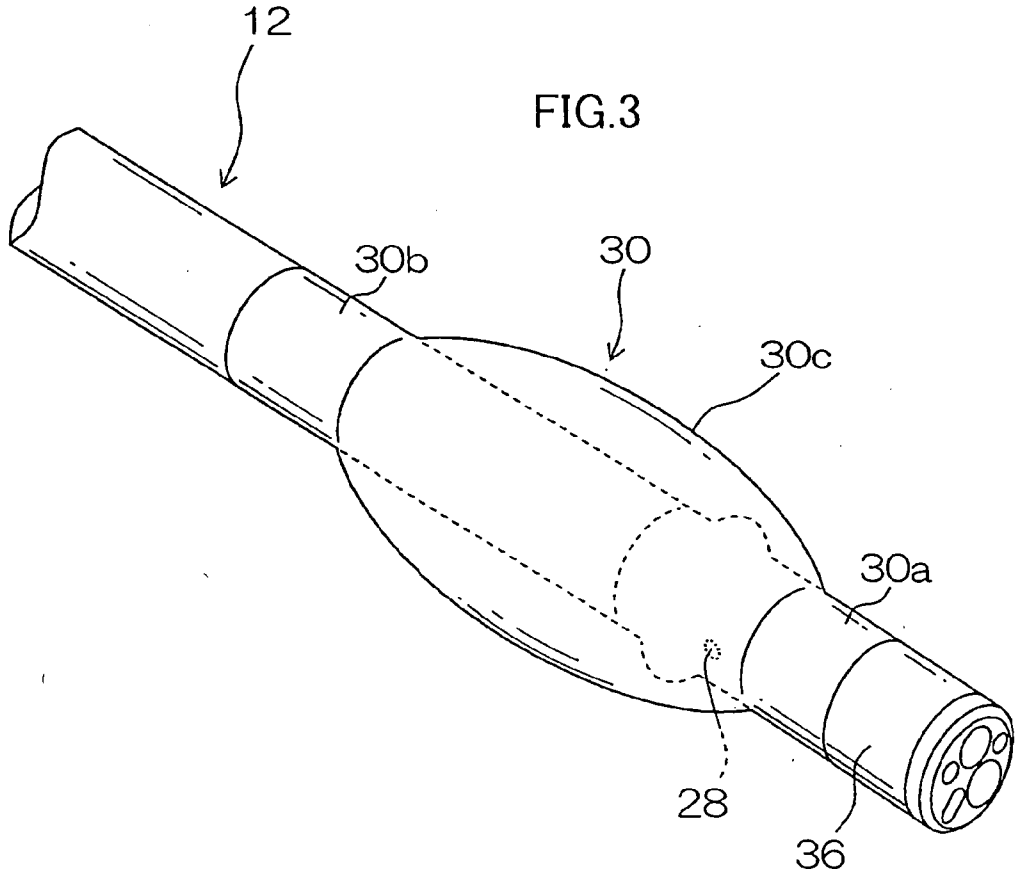

FIG.3

FIG.4

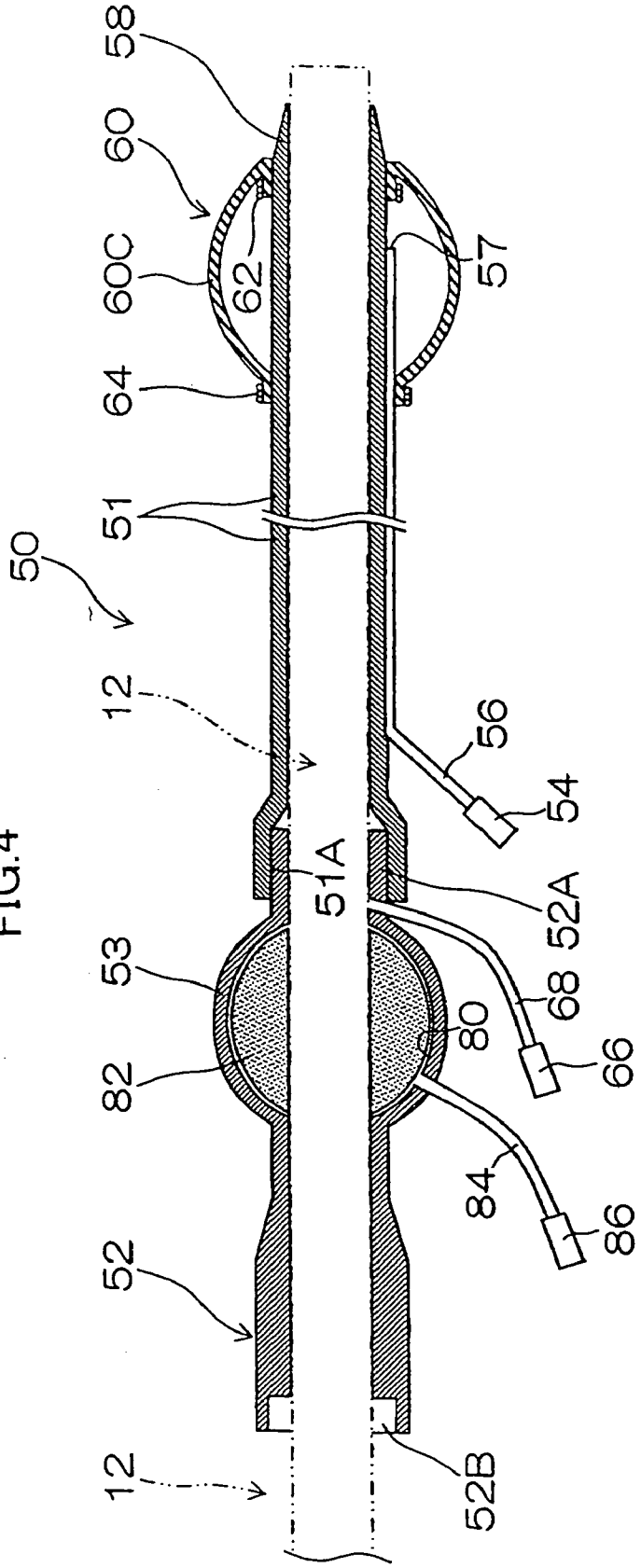
58
60
60C
62
64
51
50
12
57
56
54
51A
52A
53
82
80
68
66
84
86
52
12
52B

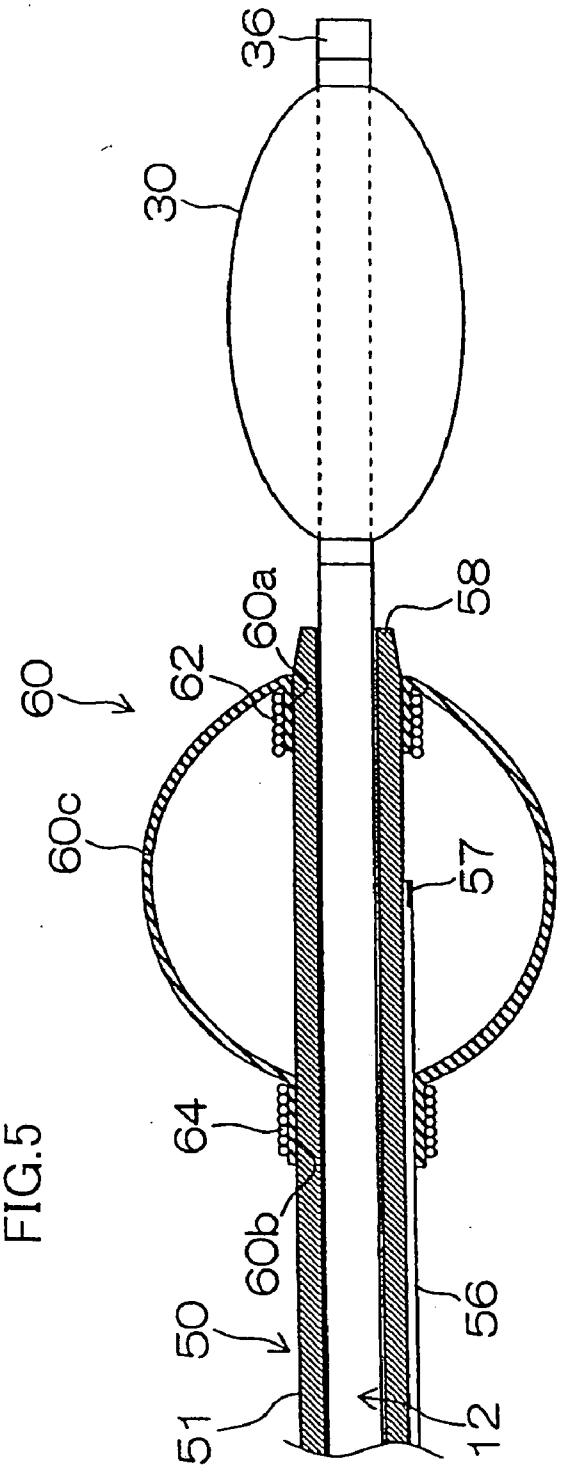

FIG.5

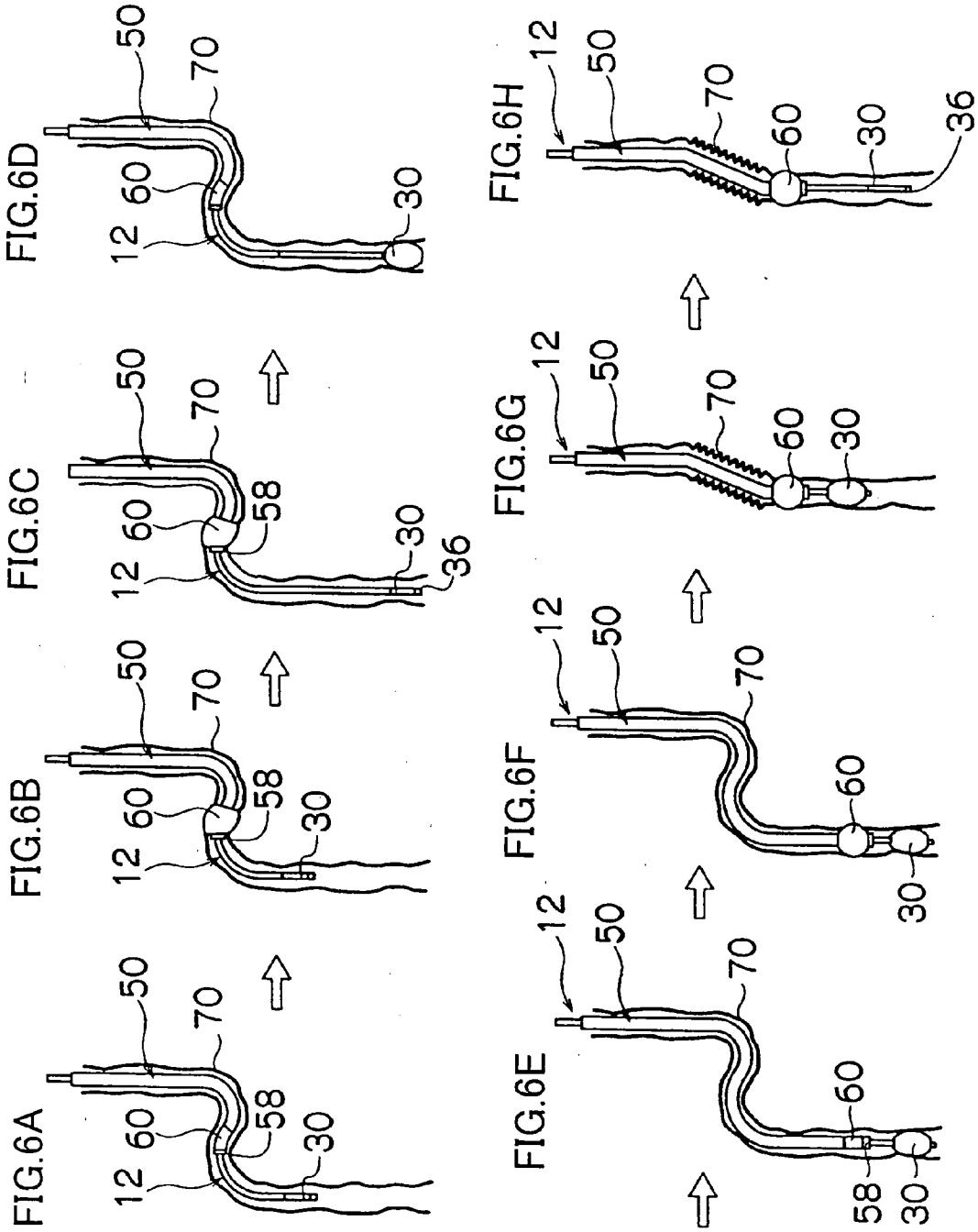
FIG.6A
12
60
58
30
50
70
FIG.6B
12
60
58
30
50
70
FIG.6C
12
60
58
30
36
50
70
FIG.6D
12
60
30
50
70
FIG.6E
12
50
70
60
58
30
FIG.6F
12
50
70
60
30
FIG.6G
12
50
70
60
30
FIG.6H
12
50
70
60
30
36

FIG.7

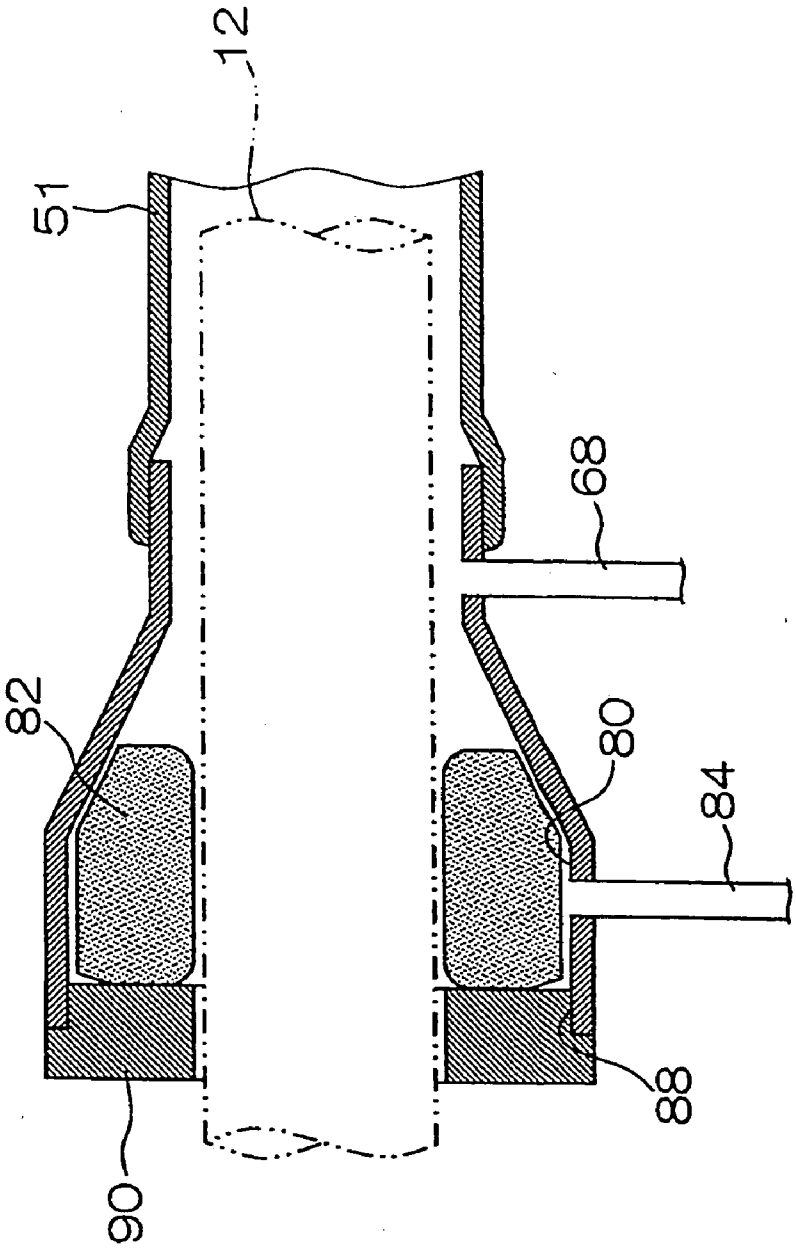

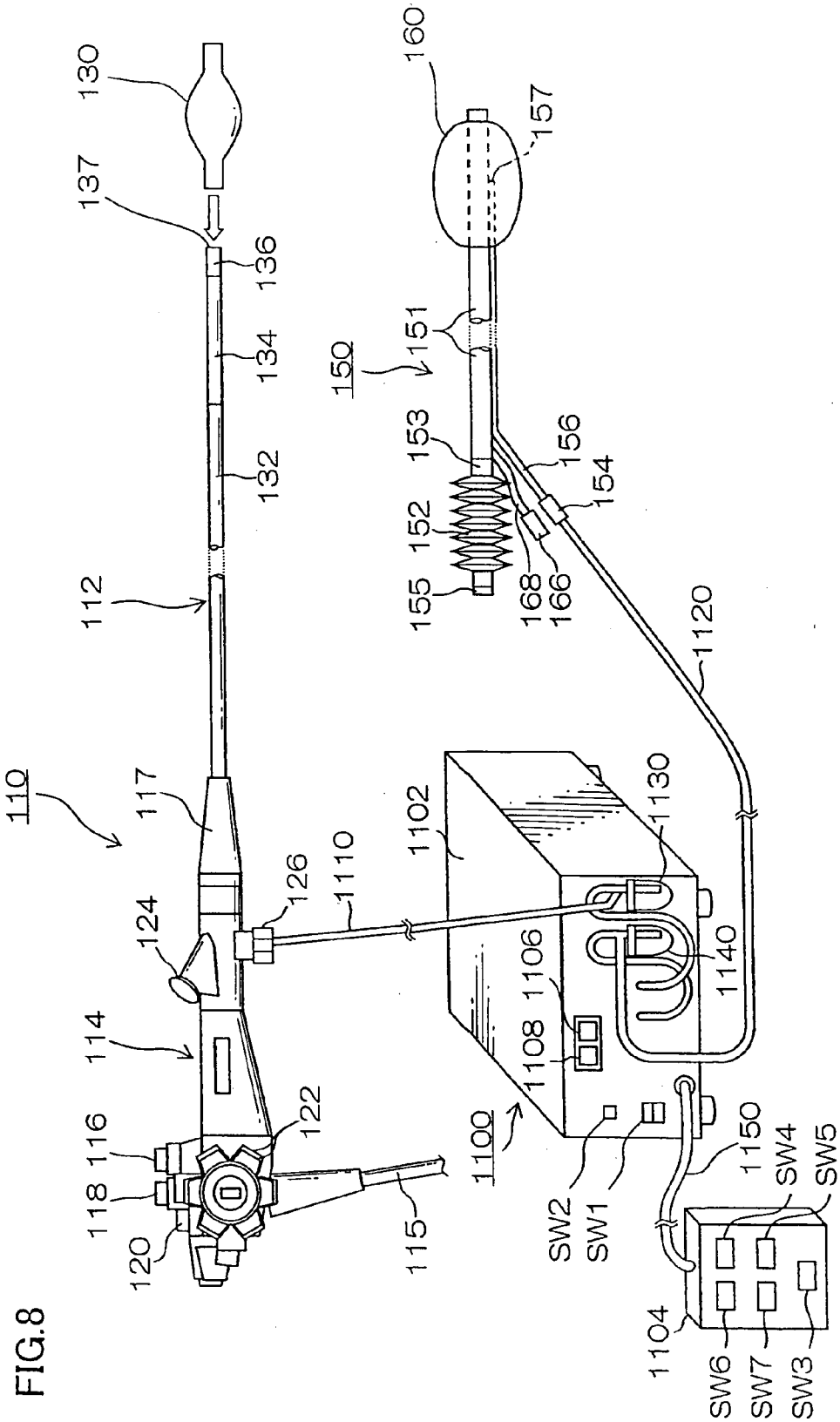
130
137
136
134
132
112
110
117
124
114
116
118
120
122
115
126
1110
1102
1100
1130
1140
1106
1108
SW2
SW1
1150
SW4
SW5
1104
SW6
SW7
SW3
160
157
151
150
153
152
155
156
154
168
166
1120

FIG.8

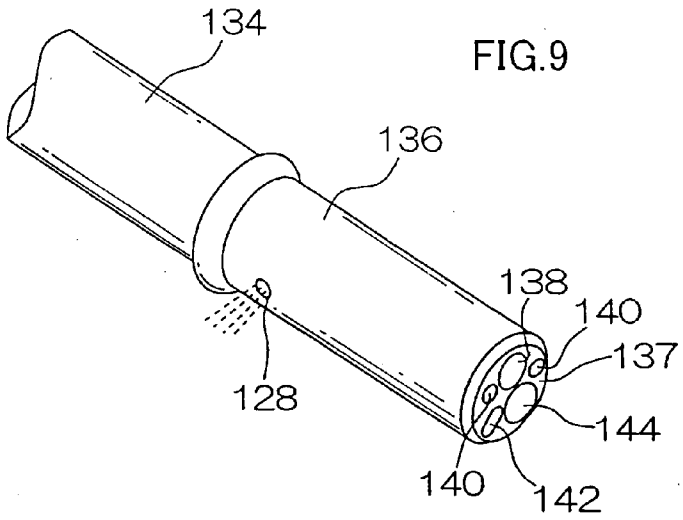
134
136
138
140
137
128
144
140
142

FIG.9

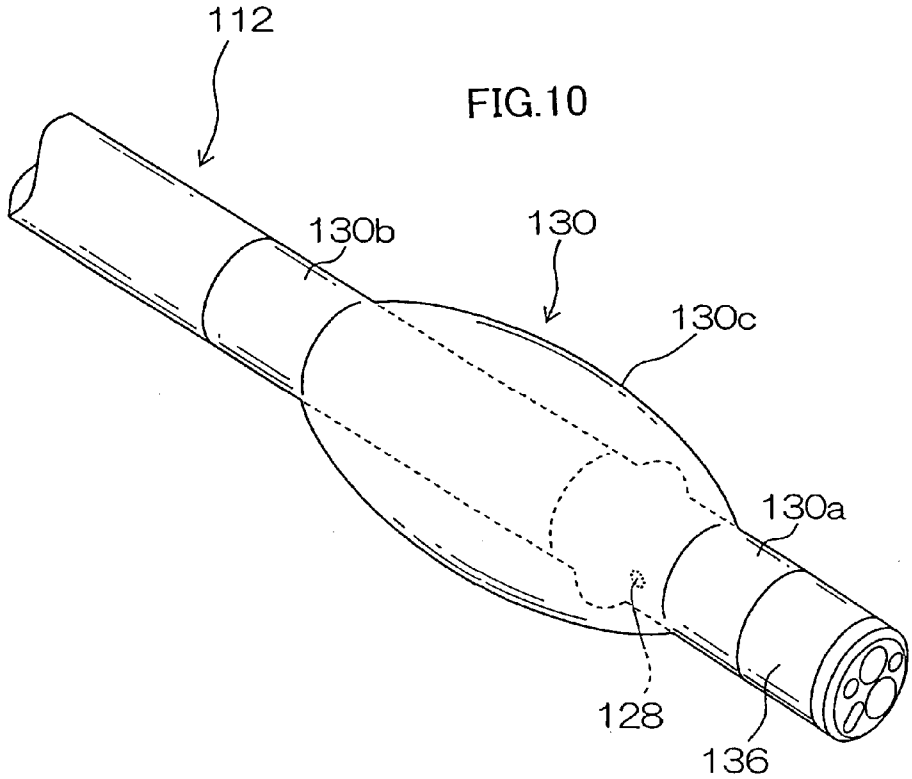
112
130b
130
130c
130a
128
136

FIG.10

FIG.11

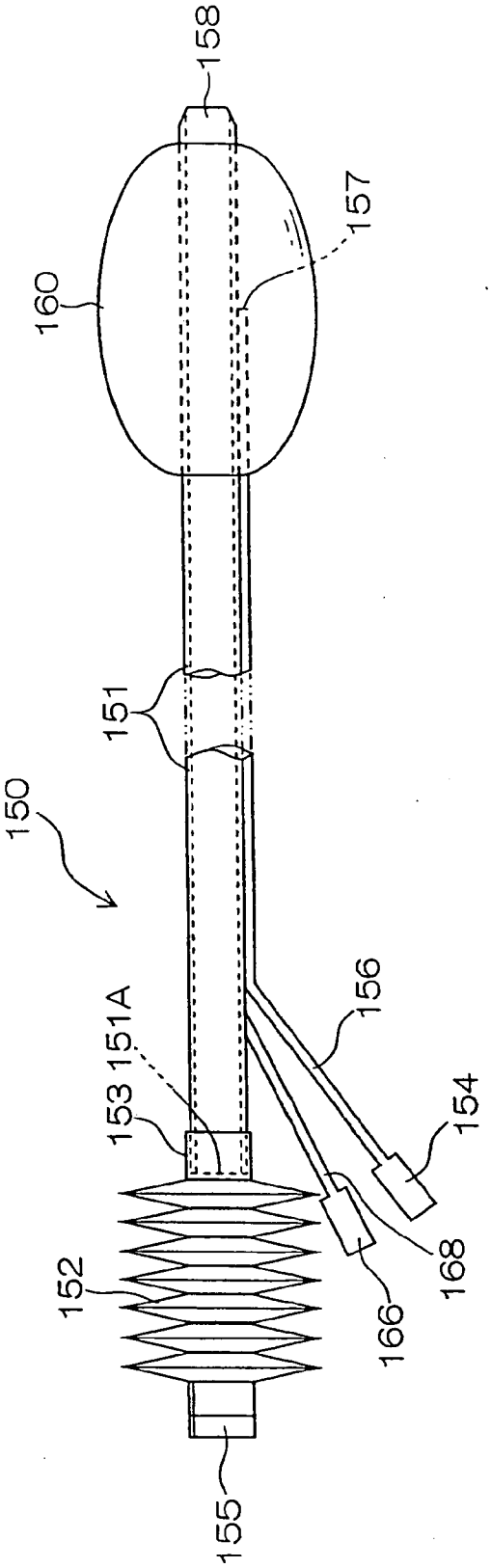

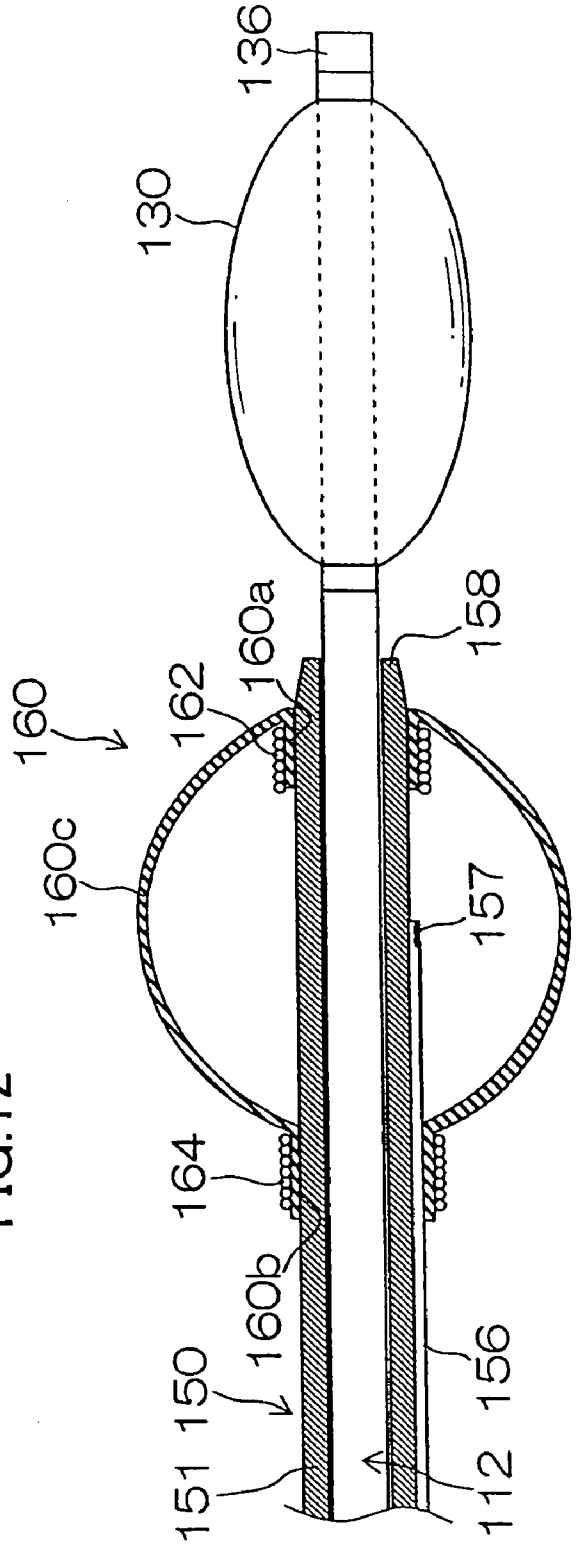

FIG.12

FIG.13

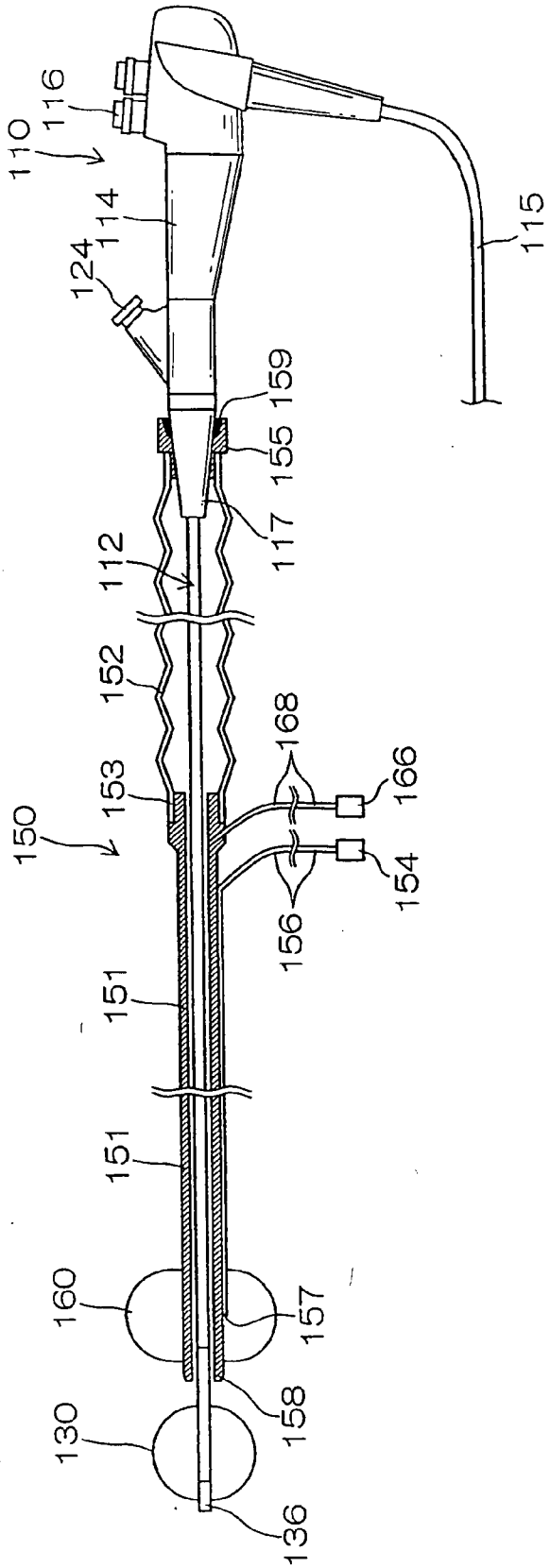
110
116
114
124
115
159
155
117
112
152
168
166
153
150
154
156
151
151
160
157
158
130
136

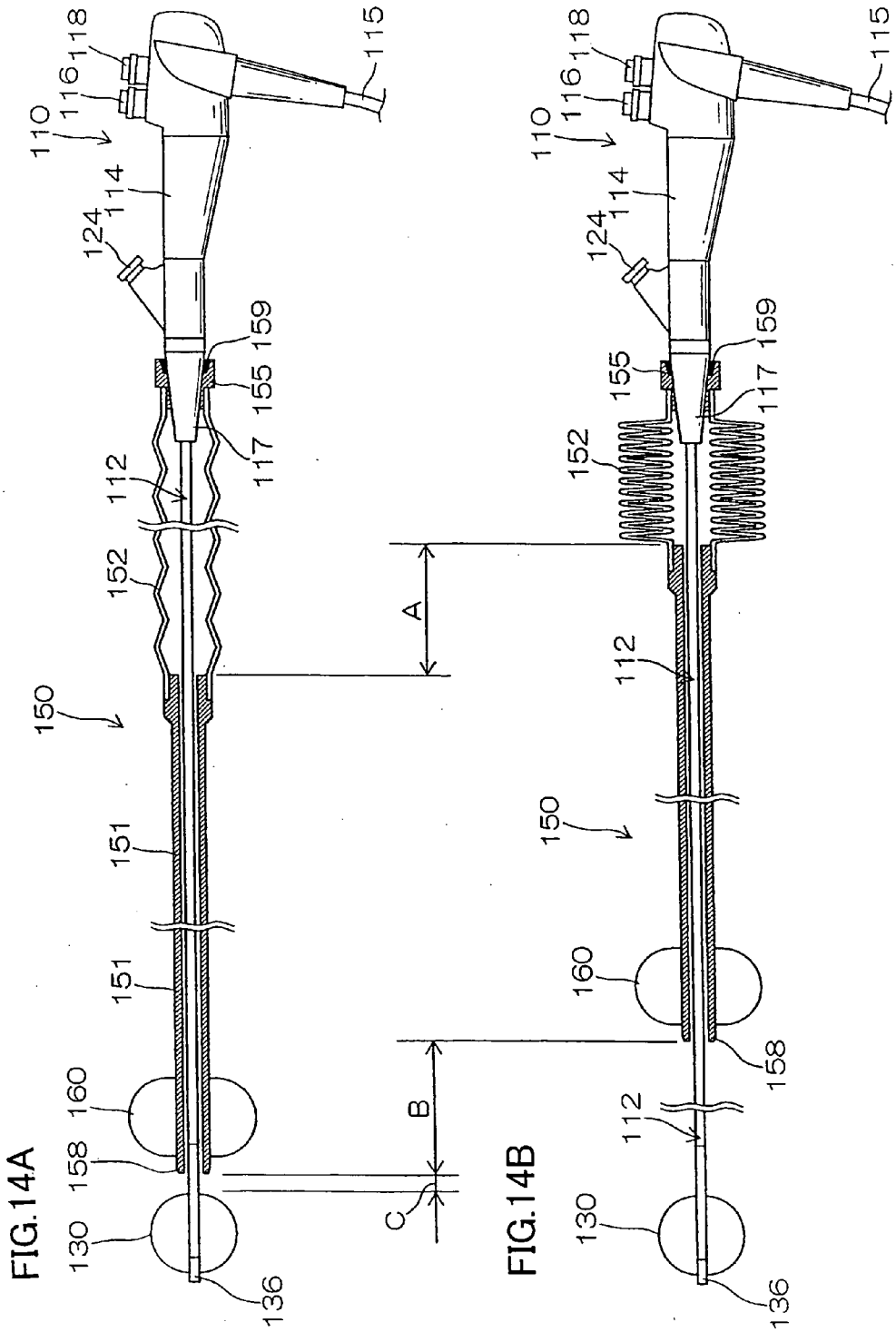

FIG.14A

FIG.14B

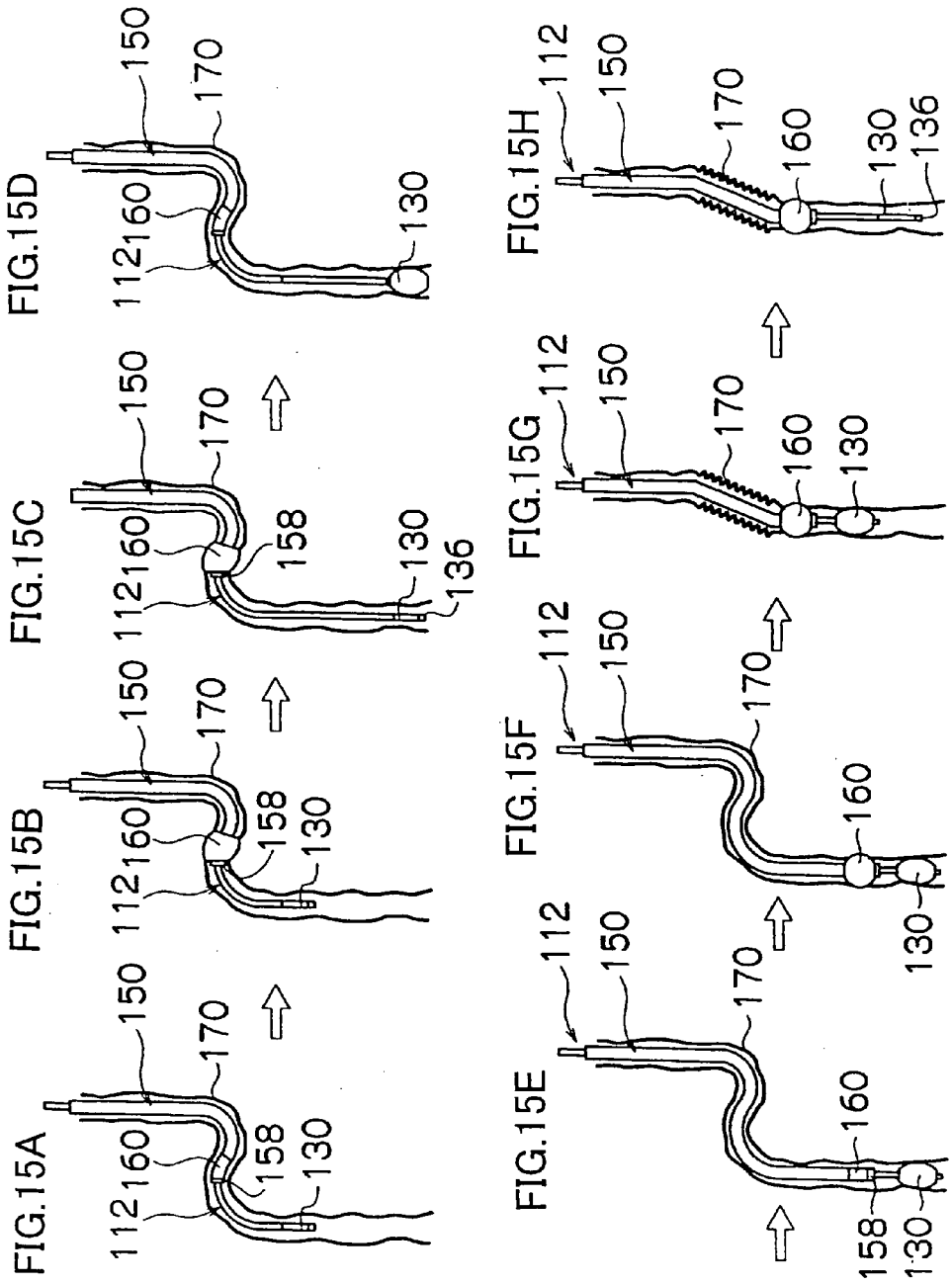
FIG.15A
112
160
150
170
158
130
FIG.15B
112
160
150
170
158
130
FIG.15C
112
160
150
170
158
130
136
FIG.15D
112
160
150
170
130
FIG.15E
112
150
170
160
158
130
FIG.15F
112
150
170
160
130
FIG.15G
112
150
170
160
130
FIG.15H
112
150
170
160
130
136

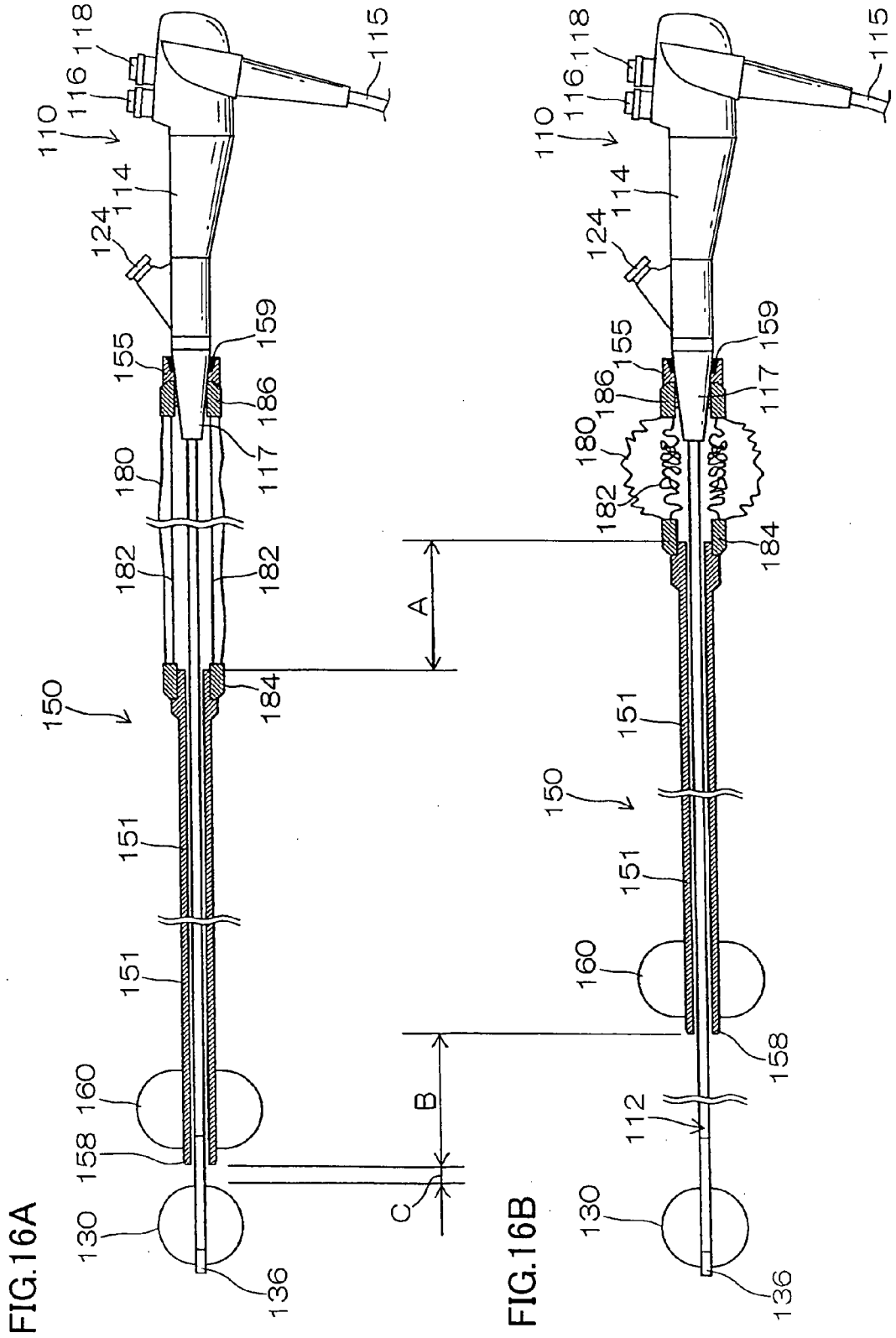

FIG.16A

FIG.16B

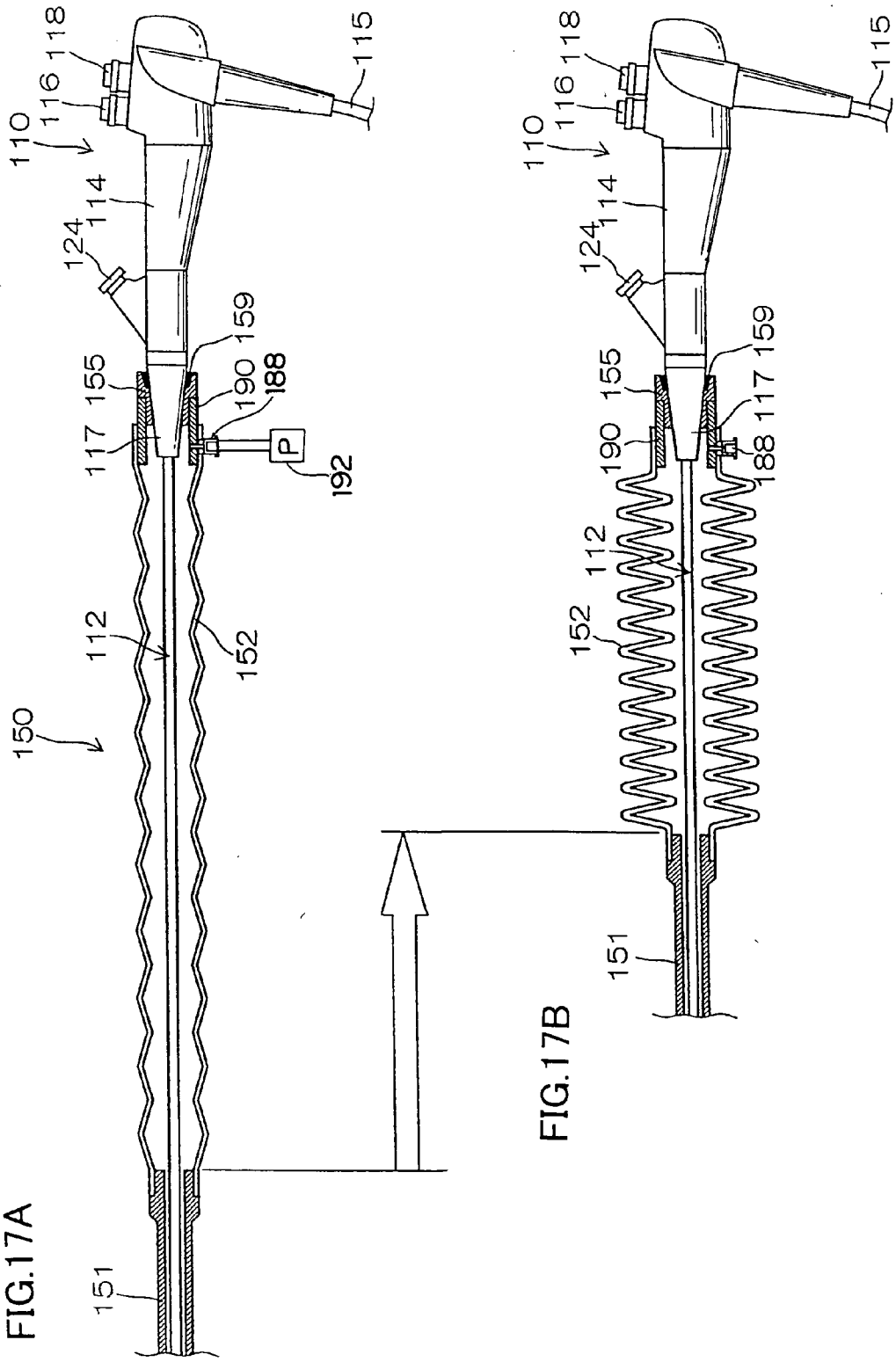

FIG.17A

FIG.17B

FIG.18

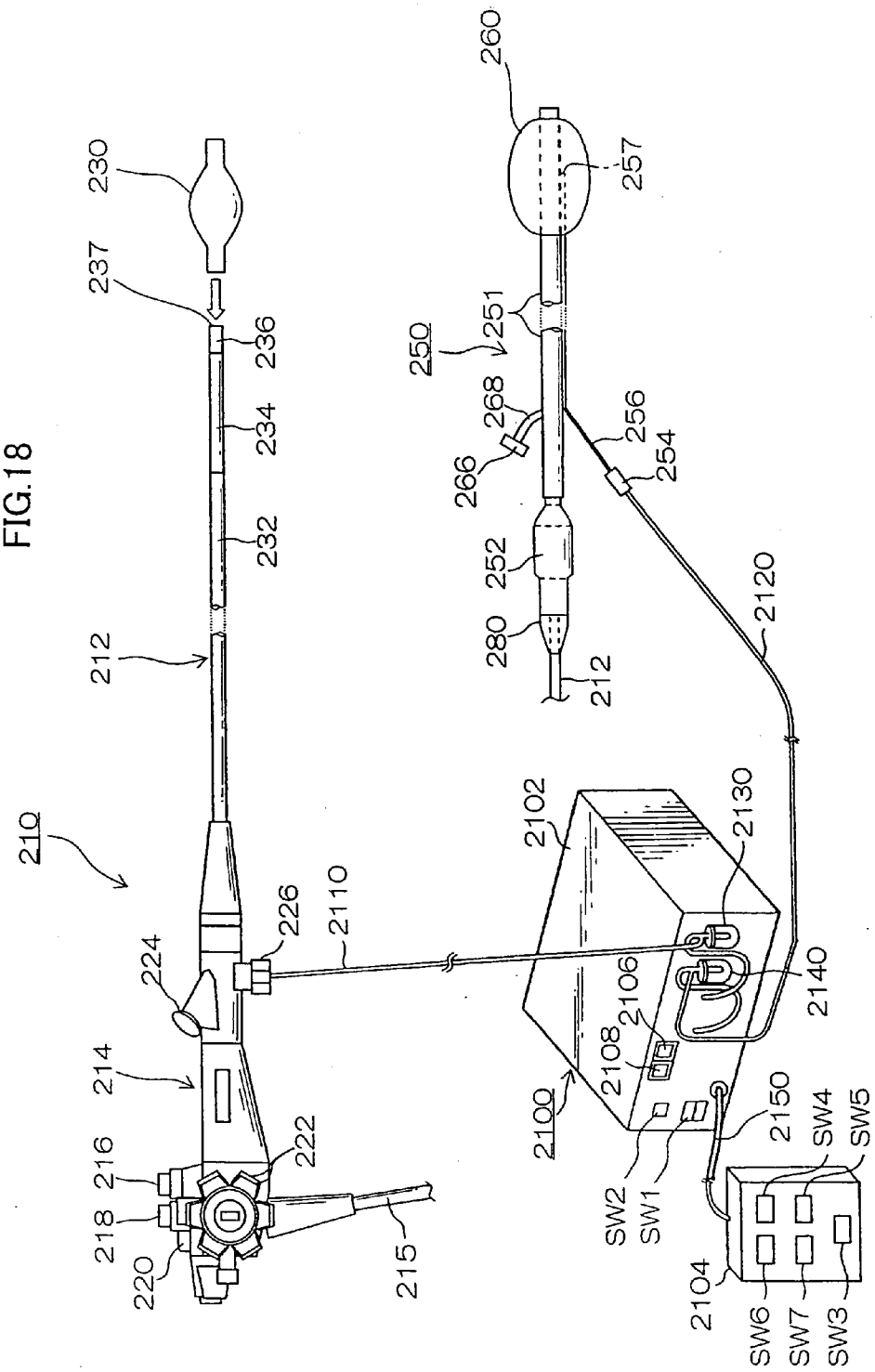
210
212
214
216
218
220
222
224
226
230
232
234
236
237
2110
215
250
251
252
254
256
257
260
266
268
280
2100
2102
2104
2106
2108
2120
2130
2140
2150
SW1
SW2
SW3
SW4
SW5
SW6
SW7

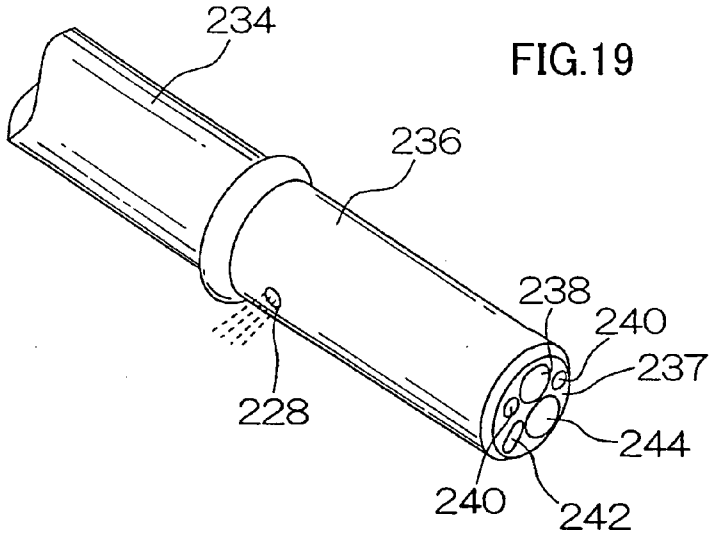
234
236
238
240
237
228
244
240
242

FIG.19

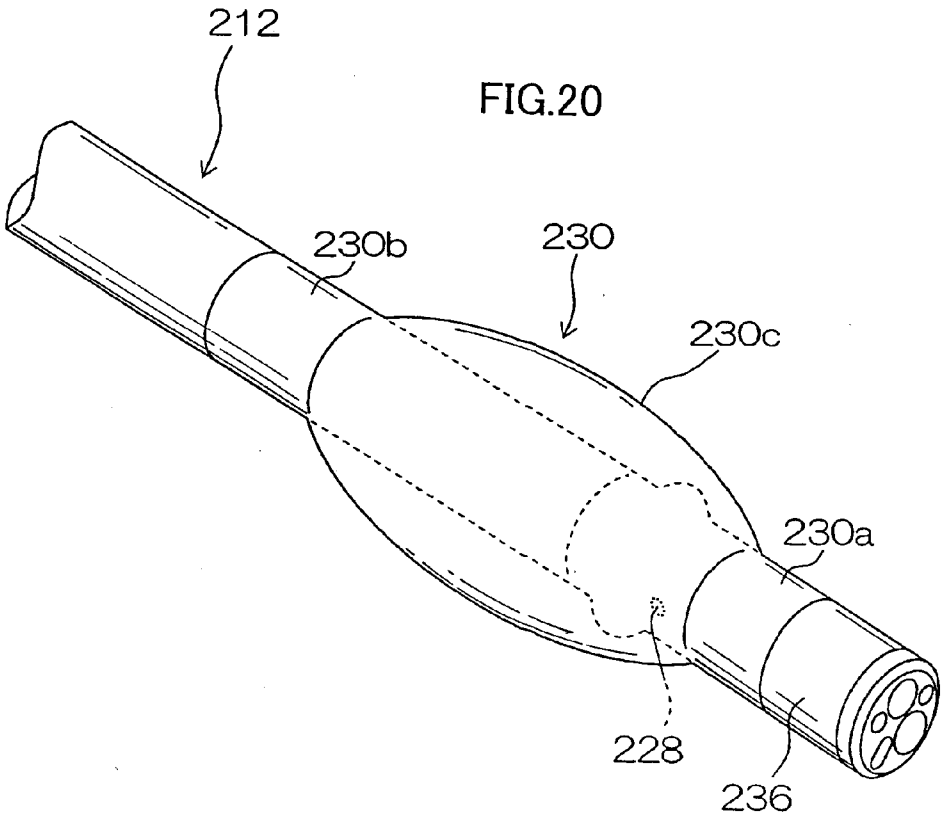
212
230b
230
230c
230a
228
236

FIG.20

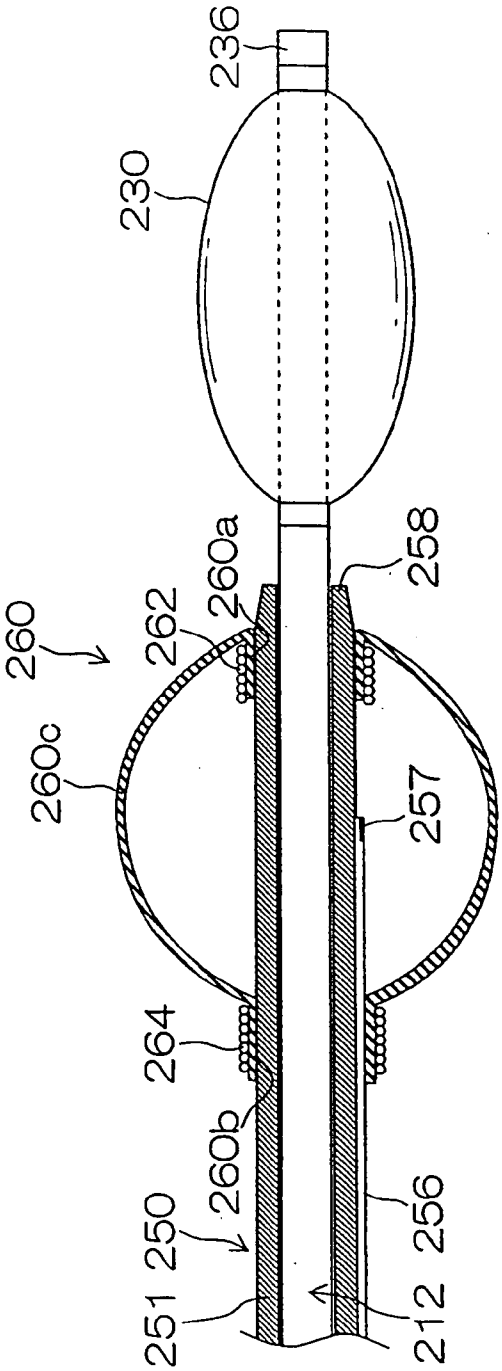

FIG.21

FIG.22

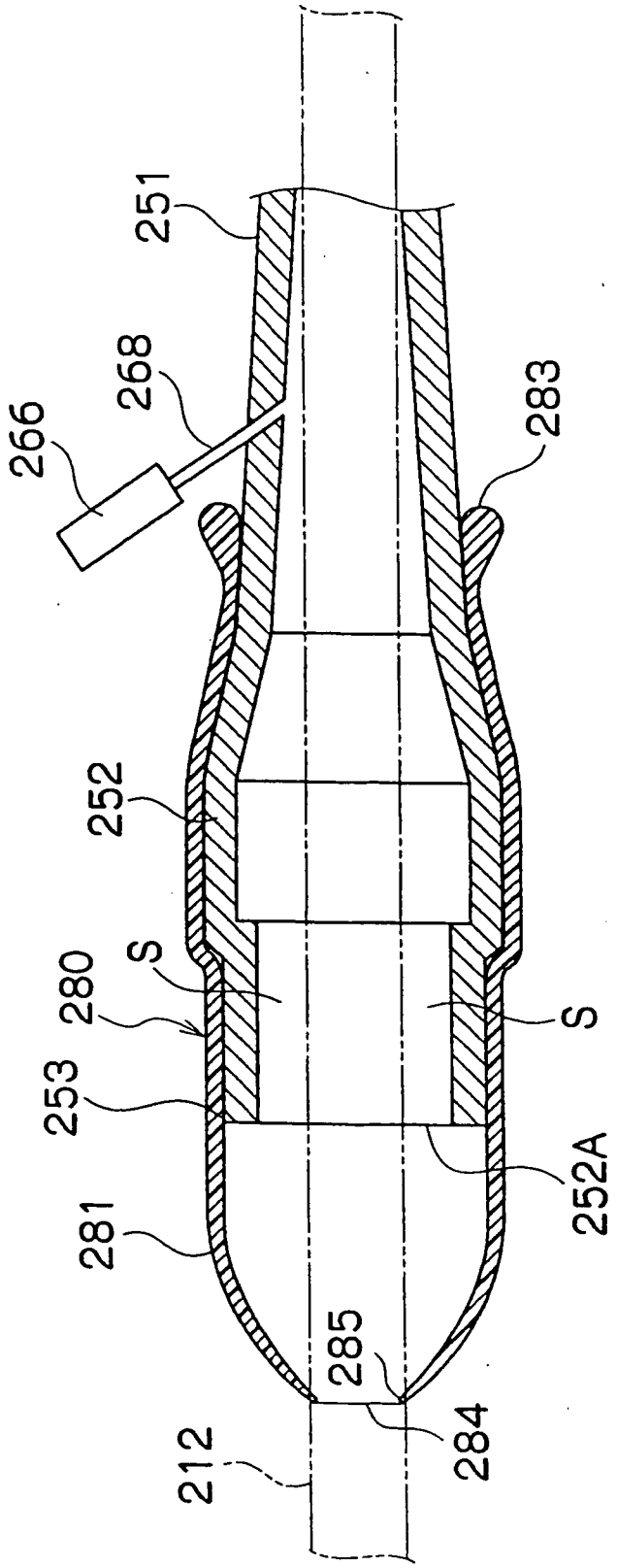

FIG.23

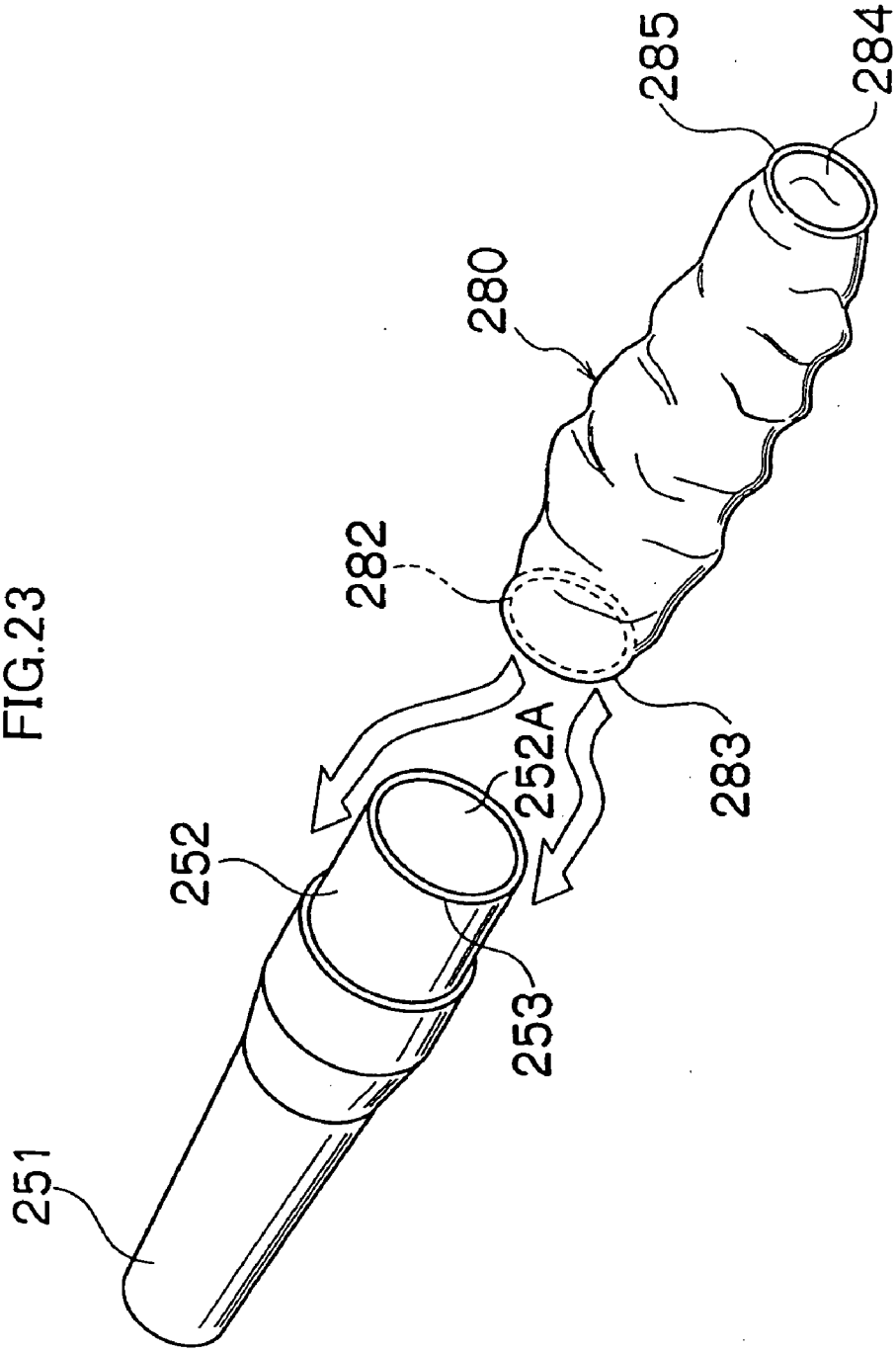

FIG.24A

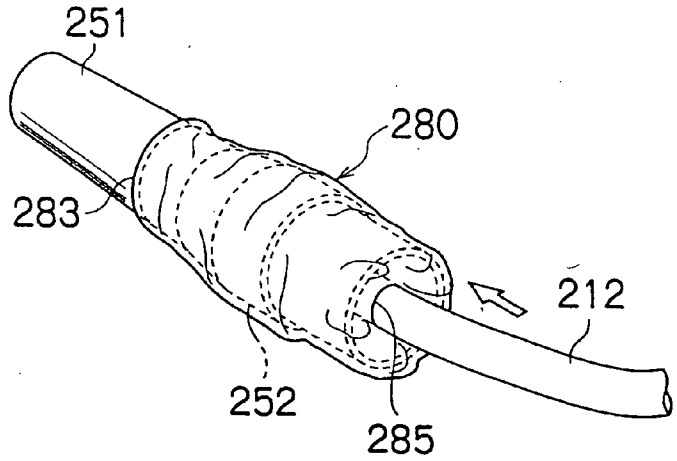

FIG.24B

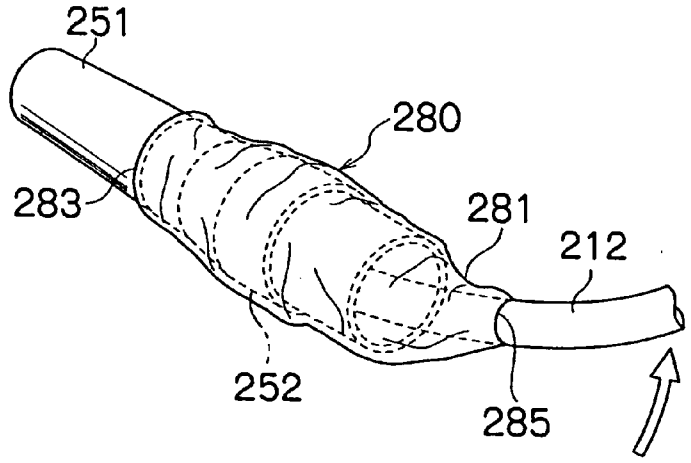

FIG.24C

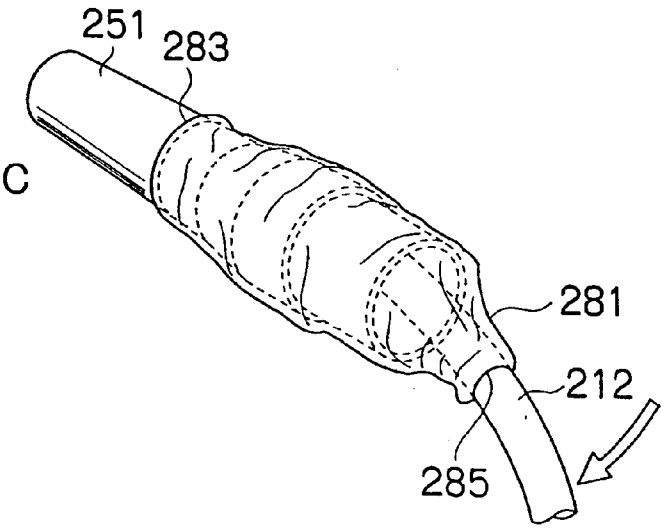

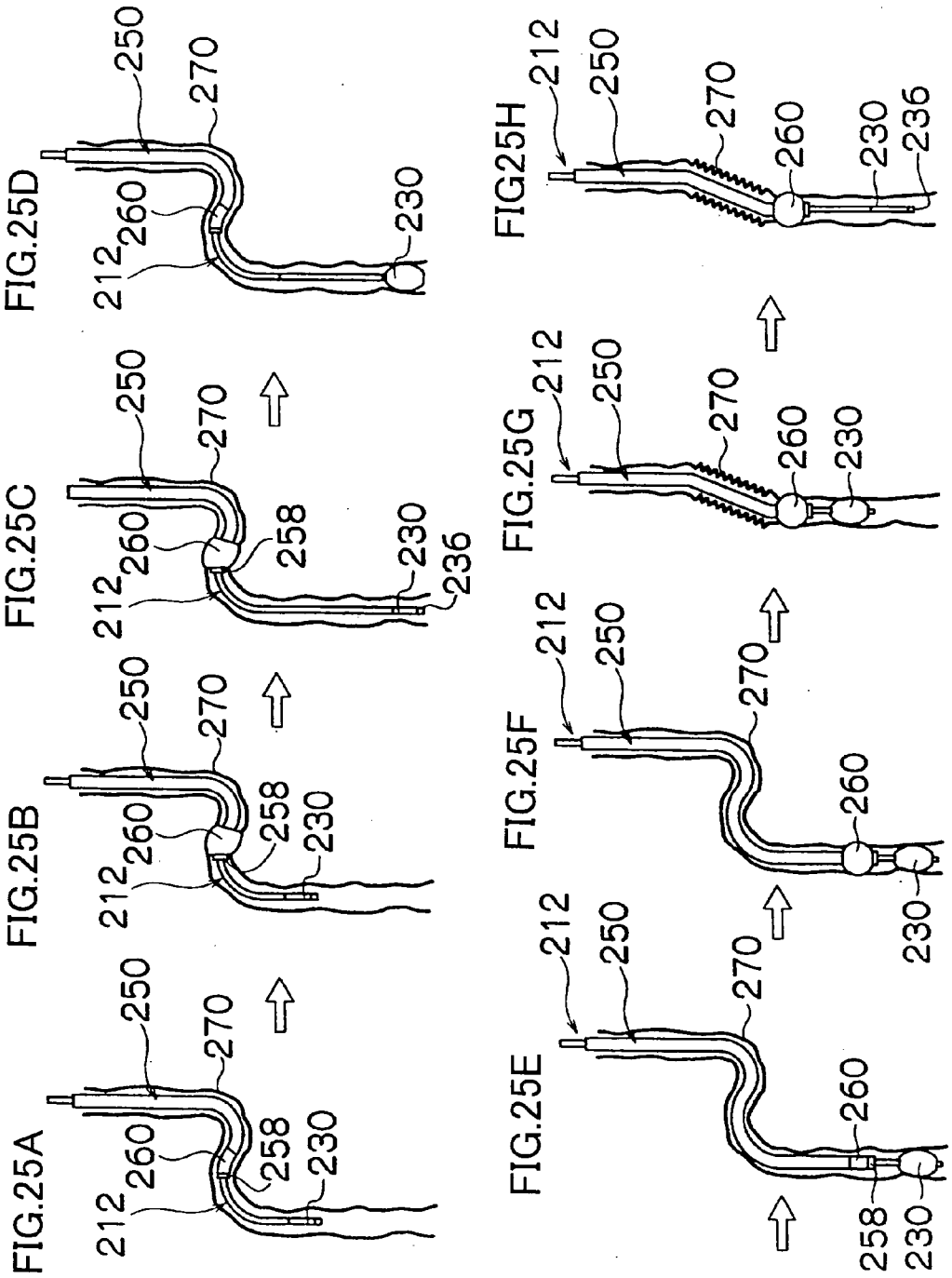
FIG.25A
212
260
258
230
250
270
FIG.25B
212
260
258
230
250
270
FIG.25C
212
260
258
230
236
250
270
FIG.25D
212
260
230
250
270
FIG.25E
258
230
260
270
250
212
FIG.25F
230
260
270
250
212
FIG.25G
260
230
270
250
212
FIG25H
260
230
236
270
250
212

FIG.26

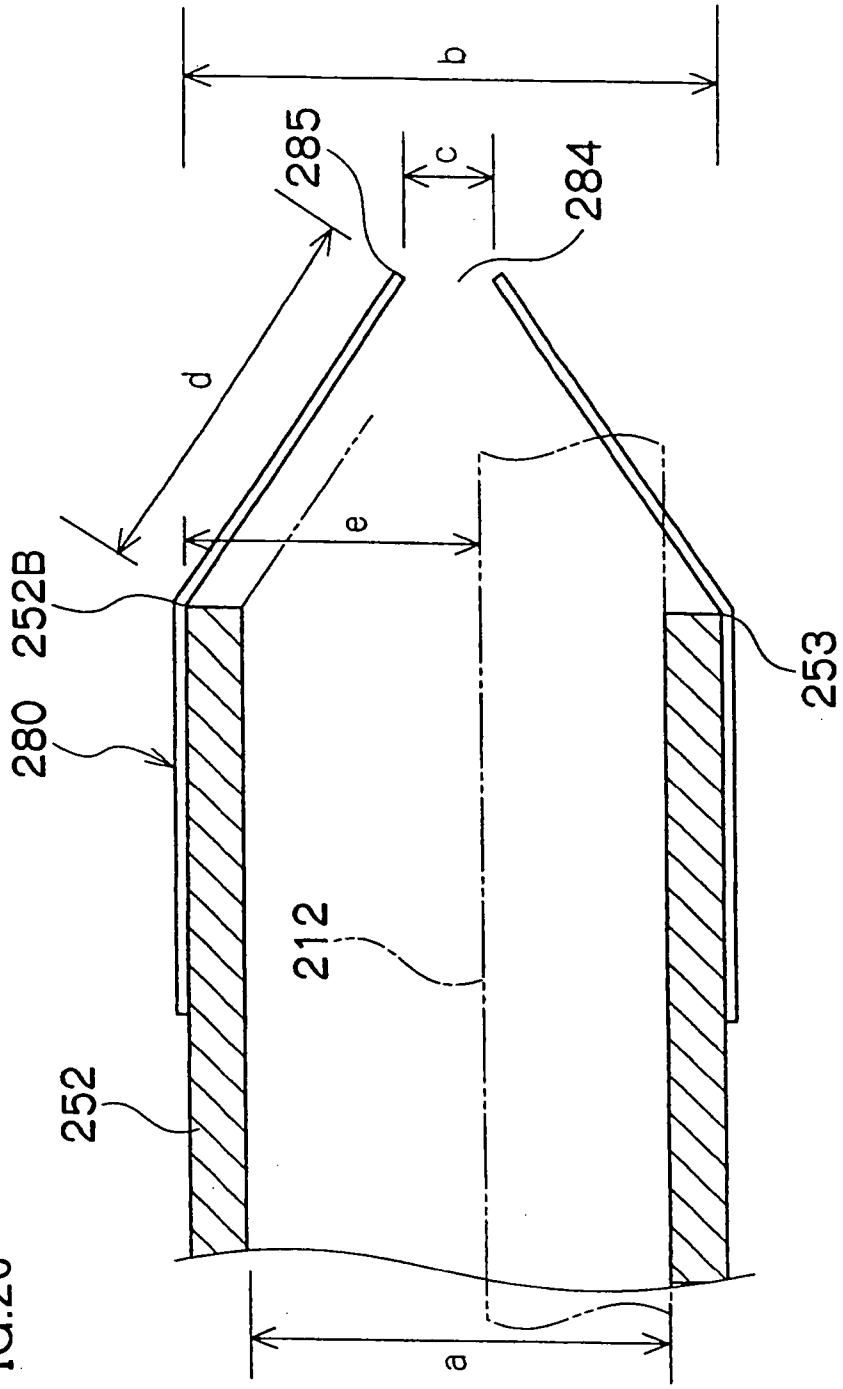

INSERTION ASSISTING TOOL FOR ENDOSCOPE

BACKGROUND OF THE INVENTION

[0001] 1. Field of the Invention

[0002] The present invention relates to an insertion assisting tool for an endoscope, and particularly, relates to an insertion assisting tool of an endoscope which is used when an insertion section of the endoscope is inserted into a body cavity.

[0003] 2. Description of the Related Art

[0004] When the insertion section of an endoscope is inserted into a deep alimentary canal such as a small intestine, by only pushing the insertion section into the deep alimentary canal, the force is difficult to transmit to a tip end of the insertion section due to complicated bending of an intestinal canal, and insertion into a deep part is difficult. Namely, if excessive bending and deflection occur to the insertion section, it is difficult to insert the insertion section further into a deeper part. Thus, there is proposed an endoscope apparatus which prevents excessive bending and deflection of the insertion section by inserting the insertion section into a body cavity with an insertion assisting tool called an over tube or a sliding tube attached to the insertion section of the endoscope, and inserting the insertion section into the body cavity while guiding the insertion section with this insertion assisting tool (for example, Japanese Patent Application Publication No. 10-248794).

[0005] Meanwhile, a double balloon type endoscope apparatus disclosed in Japanese Patent Application Publication No. 2002-301019 includes an endoscope with an inflatable and deflatable balloon attached to a tip end peripheral portion of an endoscope insertion section, and an over tube which serves as a guide at the time of insertion of the insertion section, with an inflatable and deflatable balloon attached to the tip end peripheral portion, and the endoscope insertion section inserted into the over tube. This double balloon type endoscope apparatus is for inserting the endoscope insertion section into a deep part of an alimentary canal by carrying out an insertion operation of the over tube and the endoscope insertion section and the inflation and deflation operations of the two balloons in accordance with a predetermined procedure.

SUMMARY OF THE INVENTION

[0006] However, the insertion assisting tool in Japanese Patent Application Publication No. 10-248794 has the problem that when the insertion assisting tool is inserted into a body cavity, a body fluid flows backward from a gap between the insertion assisting tool and the insertion section due to internal pressure of the body cavity, and leaks outside from a base end opening of the insertion assisting tool.

[0007] Similarly, the over tube of the double balloon type endoscope apparatus of Japanese Patent Application Publication No. 2002-301019 also has the problem that when the over tube is inserted into the body cavity, the body fluid flows backward from a gap between the over tube and the endoscope insertion section due to internal pressure of the body cavity (alimentary canal), and leaks outside from a base end opening of the over tube.

[0008] The present invention is made in view of the above circumstances, and has its object to provide an insertion assisting tool of an endoscope capable of preventing leakage of a fluid flowing backward from a body cavity.

[0009] In order to attain the above-described object, a first aspect of the present invention is, in an insertion assisting tool for an endoscope into which an insertion section of the endoscope is inserted from a base end portion side, comprising:

[0010] a fluid sealing device which seals a space between a base end part of the insertion assisting tool and the endoscope insertion section, the space being formed while the insertion section of the endoscope is inserted into the base end portion side.

[0011] According to the first aspect, the liquid sealing device is provided, and therefore, a body fluid and a fluid such as a lubricating liquid, which is supplied to the insertion assisting tool, can be prevented from leaking from the space between the base end part of the insertion assisting tool and the endoscope insertion section.

[0012] In order to attain the aforesaid object, a second aspect of the present invention is, in an insertion assisting tool into which an insertion section of an endoscope is inserted, characterized by including a liquid storing part formed at a base end part side of the insertion assisting tool.

[0013] According to the second aspect, during an operation in which the insertion assisting tool is inserted into a body cavity, the body fluid, which flows backward from the gap between the insertion assisting tool and the insertion section due to internal pressure of the body cavity, is stored in the liquid storing part formed at the side of the base end part of the insertion assisting tool, and therefore, leakage of the body fluid flowing backward can be prevented.

[0014] According to a third aspect of the present invention, the insertion assisting section is characterized in that a suction device is attached to the liquid storing part of the insertion assisting tool. By attaching the suction device to the liquid storing part like this, the body fluid stored in the liquid storing part can be discharged from the liquid storing part, and therefore, leakage from the liquid storing part due to overflow can be prevented.

[0015] According to a fourth aspect of the present invention, the insertion assisting tool is characterized in that a liquid absorbing member is housed in the liquid storing part of the insertion assisting tool, and the liquid storing part is detachably attached to an insertion assisting tool body. The liquid absorbing member such as a sponge is housed in the liquid storing part, and thereby, the body fluid stored in the liquid storing part is held by the liquid absorbing member. Thereby, leakage of the body fluid from the liquid storing part can be prevented when the insertion assisting tool is used upside down due to the motion during operation. The liquid absorbing member which sufficiently absorbs the body fluid is removed by detaching the liquid storing part from the insertion assisting tool body, and is replaced with a new liquid absorbing member, thus making it possible to use the insertion assisting tool repeatedly.

[0016] According to a fifth aspect of the present invention, an inflatable and deflatable balloon is attached to an insertion section of the endoscope and/or a tip end part of the insertion assisting tool. The insertion assisting tool can be fixed to a body wall by inflating the balloon and closely

fitting the balloon to the body wall such as an intestinal wall. In this state, the body wall is observed while performing a curving operation of the curving part of the endoscope insertion section, which protrudes from the tip end part of the insertion assisting tool, with the hand operation section. At this time, the insertion assisting tool is fixed to the body wall, and therefore, there is no fear that the curving part and the tip end part of the insertion section contact the insertion assisting tool, whereby curving operability of the curving part is enhanced. The insertion assisting tool having the balloon can be applied to a double-balloon type endoscope apparatus which uses the insertion assisting tool having the balloon by fitting the insertion assisting tool onto the endoscope insertion section also having a balloon. This endoscope apparatus makes it possible to observe an intestine by drawing in the intestine by carrying out the inflating and deflating operation of the two balloons, the insertion and extraction operation of the endoscope insertion section, and the insertion and extraction operation of the insertion assisting tool in accordance with a predetermined procedure.

[0017] In order to attain the above-described object, a sixth aspect of the present invention is characterized in that a cylindrical extendable and contractible member connecting respective base end parts of an insertion section of the endoscope and the insertion assisting tool in which the insertion section of the endoscope is inserted, said cylindrical extendable and contractible member covering the insertion section.

[0018] According to the sixth aspect of the invention, the respective base end parts of the insertion section of the endoscope and the insertion assisting tool into which the insertion section is inserted are connected by the cylindrical extendable and contractible member which covers the insertion section, and therefore, the body fluid flowing backward from the gap between the insertion assisting tool and the insertion section does not leak. Thereby, the leakage of the body fluid flowing backward from the body cavity can be prevented. Since the extendable and contractible member extends and contracts, the insertion operation and drawing-in operation of the insertion assisting tool and the insertion section can be performed smoothly.

[0019] According to a seventh aspect of the present invention, the insertion assisting tool is characterized in that the extendable and contractible member is an accordion-shaped member. Thereby, the extendable and contractible member can be easily constructed.

[0020] According to an eighth aspect of the present invention, the insertion assisting tool is characterized in that the extendable and contractible member is formed to have length by which a tip end part of the insertion assisting tool does not contact a first balloon of the insertion section when the extendable and contractible member is operated to extend most. As a result, at the stroke end when the insertion assisting tool is inserted deepest, the tip end part of the insertion assisting tool does not contact the first balloon, and therefore, the first balloon is not broken by contact of the tip end part of the insertion assisting tool. As for restraint at the time of the extension of the extendable and contractible member, the restraint can be achieved by setting the length and the number of the pleats of the accordion shape in the case of the accordion-shaped member having directivity in one direction in the extending and contracting direction. On the other hand, in the case of, for example, a bag-shaped member having no directivity in the extending and contracting direction, the restraint can be achieved by attaching restraining linear elements such as wires and strings, which restrain the extension amount, to the bag-shaped member.

[0021] According to a ninth aspect of the present invention, the insertion assisting tool is characterized in that a drain port is formed in the extendible member. The body fluid stored in the gap between the extendable and contractible member and the insertion section can be discharged to the outside from the gap via the drain port. A pump is separately connected to the drain port, and the liquid can be also discharged by the power of the power. Further, the body fluid stored in the gap may be discharged from the drain port by the pumping action occurring when the extendable and contractible member extends and contracts.

[0022] In order to achieve the above-described object, a tenth aspect of the present invention is, in the insertion assisting tool into which an insertion section of the endoscope is inserted, characterized by including a substantially cylindrical tube formed of an elastic body in which a smaller opening than a diameter of a base end part of the insertion assisting tool is formed at one end and a smaller opening than a diameter of the endoscope insertion section is formed at the other end, and characterized in that in the tube, the opening formed at the one end is attached to the base end part of the insertion assisting tool in close contact with the base end part, and the insertion section of the endoscope is slidably inserted through the tube with the insertion section of the endoscope closely fitted in the opening formed at the other end.

[0023] According to the tenth aspect, the opening formed at one end of the tube is attached to the base end part of the insertion assisting tool in close contact with the base end part by the elastic force, and the insertion section of the endoscope is slidably inserted through the opening in close contact with the opening formed at the other end of the tube by the elastic force. During the operation in which the insertion assisting tool is inserted into the body cavity, the body fluid flowing backward from the gap between the insertion assisting tool and the insertion section due to the internal pressure of the body cavity is stored in the tube without leaking from the tube. Namely, both ends of the tube are attached to the parts respectively in close contact with the parts by the elastic force, and therefore, the tube exhibits the function of the check valve. Thereby, the leakage of the body fluid can be prevented. In the case of the insertion assisting tool enhanced in slip property of the insertion section for the insertion assisting tool by supplying the lubricating liquid into the gap between the insertion assisting tool and the insertion section, it becomes possible to fill the lubricating liquid in the gap by allowing the tube to have the pot function of storing the lubricating liquid, and therefore, favorable slip property can be always obtained. Further, the supply amount and the number of supply times of the lubricating liquid can be reduced by the lubricating liquid pot function of the tube.

[0024] An eleventh aspect of the present invention is the invention which enhances the insertion and extraction operability of the insertion section with respect to the insertion assisting tool in the case where the tube is fitted to the aforesaid parts. The insertion section is inserted into the base

end part of the insertion assisting tool with some degree of freedom. Namely, the space between the base end part of the insertion assisting tool and the insertion section is set to be comparatively larger than the spaces at the other positions, and the insertion and extraction operability of the operator is enhanced by making the insertion and extraction direction of the insertion section properly changeable by using the space. Accordingly, in the case where the tube is fitted, it is also necessary to keep this insertion and extraction operability.

[0025] Thus, according to the eleventh aspect, the insertion assisting tool is characterized in that the tube is formed in a size which satisfies a formula: $d>a-c+(b-a)/2$ where an inner diameter of the insertion assisting tool is a, a maximum diameter of the tube when the tube is attached to the insertion assisting tool is b, a diameter of an opening formed at the other end of the tube is c, and a distance from a fixed portion of the tube to the insertion assisting tool to an edge portion of the opening formed at the other end of the tube is d. As a result, when the insertion section is put aside as much as possible by using the space, the tube does not have tension, but has slack, and therefore, the insertion and extraction operability of the tube can be maintained.

[0026] According to the insertion assisting tool of the endoscope according to the present invention, the fluid sealing device which seals the space between the base end part of the insertion assisting tool and the insertion section of the endoscope, and prevents the fluid from leaking is provided, and therefore, the fluid can be prevented from leaking from the space between the base end part of the insertion assisting tool and the insertion section.

[0027] According to the insertion assisting tool of the endoscope according to the present invention, the body fluid flowing backward from the gap between the insertion assisting tool and the insertion section is stored in the liquid storing part formed at the base end part side of the insertion assisting tool, and therefore, leakage of the body fluid flowing backward can be prevented.

[0028] Further, according to the insertion assisting tool of the endoscope according to the present invention, the space between the insertion assisting tool and the insertion section is covered with the extendable and contractible member, and therefore, leakage of the body fluid flowing backward from the inside of the body cavity can be prevented. In addition, the extendable and contractible member extends and contracts, and therefore, the insertion operation and drawing-in operation of the insertion assisting tool and the insertion section can be smoothly performed.

[0029] According to the insertion assisting tool of the endoscope according to the present invention, the body fluid flowing backward from the space between the insertion assisting tool and the insertion section is stored in the tube having the function of the check valve, and therefore, the leakage of the body fluid flowing backward can be prevented.

BRIEF DESCRIPTION OF THE DRAWINGS

[0030] FIG. **1** is a system schematic diagram of an endoscope apparatus according to the present invention;

[0031] FIG. **2** is a perspective view showing a tip end part of an insertion section of an endoscope;

[0032] FIG. **3** is a perspective view showing the tip end part of the insertion section onto which a first balloon is fitted;

[0033] FIG. **4** is a sectional side view showing an over tube;

[0034] FIG. **5** is a sectional side view showing a tip end portion of the over tube through which the insertion section is inserted;

[0035] FIGS. **6**A to **6**H are explanatory views showing an operation method of the endoscope apparatus according to the present invention;

[0036] FIG. **7** is a partially enlarged sectional view showing another example of the over tube;

[0037] FIG. **8** is a system schematic diagram of an endoscope apparatus to which the over tube according to the present invention is applied;

[0038] FIG. **9** is a perspective view showing a tip end part of an insertion section of the endoscope;

[0039] FIG. **10** is a perspective view showing a tip end rigid part of the insertion section onto which the first balloon is fitted;

[0040] FIG. **11** is a side view of the over tube;

[0041] FIG. **12** is a sectional side view showing the tip end part of the over tube through which the insertion section is inserted;

[0042] FIG. **13** is a sectional side view of the over tube which is fitted onto the endoscope insertion section;

[0043] FIGS. **14**A and **14**B are explanatory views showing a stroke of an accordion-shaped extendable and contractible member of the over tube;

[0044] FIGS. **15**A to **15**H are explanatory views showing an operation method of the endoscope apparatus shown in FIG. **1**;

[0045] FIGS. **16**A and **16**B are explanatory views showing an operation of a bag-shaped member of the over tube;

[0046] FIGS. **17**A and **17**B are sectional side views of the over tube provided with a drain port at the accordion-shaped extendable and contractible member of the over tube;

[0047] FIG. **18** is a system schematic diagram of an endoscope apparatus according to the present invention;

[0048] FIG. **19** is a perspective view showing the tip end part of the insertion section of the endoscope;

[0049] FIG. **20** is a perspective view showing the tip end part of the insertion section of the endoscope;

[0050] FIG. **21** is a sectional side view showing the over tube;

[0051] FIG. **22** is a sectional view of a tube attached to the gripping part of the over tube;

[0052] FIG. **23** is a perspective view of the over tube and the tube;

[0053] FIGS. **24**A to **24**C are explanatory views showing insertion and extraction operation of the insertion section with respect to the tube;

[0054] FIGS. **25**A to **25**H are explanatory views showing an operation method of the endoscope apparatus according to the present invention; and

[0055] FIG. **26** is a schematic diagram for explaining the size of the tube.

DETAILED DESCRIPTION OF THE PREFERRED EMBODIMENTS

[0056] Preferred embodiments of an insertion assisting tool of an endoscope according to the present invention will be explained in accordance with the following attached drawings.

[0057] FIG. **1** shows a system schematic diagram of an endoscope apparatus to which an insertion assisting tool according to a first embodiment of the present invention is applied. The endoscope apparatus shown in the drawing is constructed by an endoscope **10**, an over tube (corresponding to the insertion assisting tool) **50**, and a balloon control device **100**.

[0058] The endoscope **10** includes a hand operation section **14**, and an insertion section **12** connected to the hand operation section **14**. A universal cable **15** is connected to the hand operation section **14**, and a connecter (not shown) connected to a processor and a light source device not shown is provided at a tip end of the universal cable **15**.

[0059] On the hand operation section **14**, an air/water passing button **16**, a suction button **18**, and a shutter button **20** which are operated by an operator are provided in parallel, and a pair of angle knobs **22** and **22**, and a forceps insertion part **24** are respectively provided at predetermined positions. Further, the hand operation section **14** is provided with a balloon air port **26** for supplying air to a first balloon **30** and sucking air from the balloon **30**.

[0060] The insertion section **12** is constructed by a flexible part **32**, a curving part **34** and a tip end part **36**. The curving part **34** is constructed by connecting a plurality of node rings to be able to curve, and is remotely operated to curve by the rotational operation of a pair of angle knobs **22** and **22** provided on the hand operation section **14**. Thereby, a tip end surface **37** of the tip end part **36** can be directed in a desired direction.

[0061] As shown in FIG. **2**, the tip end surface **37** of the tip end part **36** is provided with an object optical system **38**, an illumination lens **40**, an air/water passing nozzle **42**, a forceps port **44** and the like in predetermined positions. An air supply/suction port **28** is provided on an outer peripheral surface of the tip end part **36**, and this air supply/suction port **28** communicates with the balloon air port **26** in FIG. **1** via an air supply tube (not shown) with an inner diameter of about 0.8 mm which is inserted into the insertion section **12**. Accordingly, air is blown out of the air supply/suction port **28** of the tip end part **36** by supplying air to the balloon air port **26**, and on the other hand, air is sucked from the air supply/suction port **28** by sucking air from the balloon air port **26**.

[0062] As shown in FIG. **1**, the first balloon **30** constituted of an elastic body such as rubber is detachably attached to the tip end part **36** of the insertion section **12**. The first balloon **30** is formed by a bulging portion **30***c* in a center and attaching portions **30***a* and **30***b* at both ends of the bulging portion **30***c*, and is attached to the tip end part **36** side so that the air supply/suction port **28** is located inside the bulging portion **30***c* as shown in FIG. **3**. The attaching portions **30***a* and **30***b* are formed to have smaller diameters than the diameter of the tip end part **36**, and after being closely fitted onto the tip end part **36** with their elastic forces, the attaching portions **30***a* and **30***b* are fixed with threads not shown wound around the attaching portions **30***a* and **30***b*. The fixation is not limited to the thread winding fixation, but the attaching portions **30***a* and **30***b* may be fixed to the tip end part **36** by fitting fixing rings onto the attaching portions **30***a* and **30***b*.

[0063] The first balloon **30** fitted onto the tip end part **36** has its bulging portion **30***c* inflated in a substantially spherical shape by blowing air from the air supply/suction port **28** shown in FIG. **2**. On the other hand, by sucking air from the air supply/suction port **28**, the bulging portion **30***c* is deflated and is closely fitted onto the outer peripheral surface of the tip end part **36**.

[0064] The over tube **50** shown in FIG. **1** is formed by a tube body **51**, and a gripping part **52** in which a liquid storing part **53** is formed. The tube body **51** is formed into a cylindrical shape and has a slightly larger inner diameter than an outer diameter of the insertion section **12**, as shown in FIGS. **4** and **5**. The tube body **51** is constructed by covering an outer side of a flexible resin tube made of urethane or the like with lubricating coat and covering an inner side with the lubricating coat. A connecting port **52**A formed at a tip end of the rigid gripping part **52** is fitted onto a base end opening **51**A of the tube body **51** in a watertight state, and the gripping part **52** is constructed to be attachable and detachable with respect to the tube body **51**. The insertion section **12** is inserted toward the tube body **51** from the base end opening **52**B of the gripping part **52**.

[0065] As shown in FIG. **4**, a balloon air port **54** is provided at the base end side of the tube body **51**. An air supply tube **56** with an inner diameter of about 1 mm is connected to the balloon air port **54**, and this tube **56** is bonded to an outer peripheral surface of the tube body **51** and is provided to extend to a tip end portion of the tube body **51**.

[0066] A tip end **58** of the tube body **51** is formed into a tapered shape. A second balloon **60** constituted of an elastic body such as rubber is fitted onto the base end side of the tip end **58** of the tube body **51**. The second balloon **60** is fitted in the state in which the tube body **51** penetrates through the balloon **60**, and is constructed by a bulging portion **60***c* in a center, and attaching portions **60***a* and **60***b* at both ends of the bulging portion **60***c*. The attaching portion **60***a* at the tip end side is folded back to the inside of the bulging portion **60***c*, and the attaching portion **60***a* folded back is fixed to the tube body **51** with an X-ray contrast thread **62** wound around the attaching portion **60***a* which is folded back. The attaching portion **60***b* at the base end side is disposed outside the second balloon **60**, and is fixed to the tube body **51** with a thread **64** wound around the attaching portion **60***b*.

[0067] The bulging portion **60***c* is formed into a substantially spherical shape in a natural state (the state in which the bulging portion **60***c* does not inflate or deflate), and as for the size, the bulging portion **60***c* is formed to be larger than the size of the first balloon **30** in a natural state (the state in which the balloon **30** does not inflate or deflate). Accord-

ingly, when the air is supplied to the first balloon **30** and the second balloon **60** at the same pressure, the outer diameter of the bulging portion **60***c* of the second balloon becomes larger than the outer diameter of the bulging portion **30***c* of the first balloon **30**. The outer diameter of the second balloon **60** is constructed so as to be ϕ50 mm when the outer diameter of the first balloon **30** is ϕ25 mm, for example.

[**0068**] The aforementioned tube **56** is opened in the inside of the bulging portion **60***c*, and an air supply/suction port **57** is formed. Accordingly, when air is supplied from the balloon air port **54**, the air is blown from the air supply/suction port **57** and thereby, the bulging portion **60***c* is inflated. When air is sucked from the balloon air port **54**, the air is sucked from the air supply/suction portion **57**, and the second balloon **60** is deflated. Reference numeral **66** in FIG. **4** designates an inlet port for filling a lubricant such as water into the tube body **51**, and the inlet port **66** communicates with the vicinity of a connecting port **52**A formed at a tip end of the gripping part **52** via a tube **68** with a thin diameter.

[**0069**] The liquid storing part **53** of the gripping part **52** is formed into a spherical shape having a larger diameter than the diameter of the tube body **51**, and an arc-shaped recessed portion **80** is formed inside the liquid storing part **53**. A sponge (liquid absorbing member) **82** formed into a donut shape is hosed in this recessed portion **80**. The inner diameter of the sponge **82** is formed to be larger than the outer diameter of the insertion section **12**, and therefore, it causes no problem in insertion of the insertion section **12**. On the other hand, when liquid leakage is prevented by an O-ring or the like, the O-ring has to be fastened to the insertion section **12**, which causes the problem of impairing insertion easiness, and the present example can solve such a problem. The shape of the sponge is not limited to the donut shape, but the sponge may be formed into a substantially cylindrical shape. By forming a split in the sponge formed into the donut shape or substantially cylindrical shape, the insertion section **12** can be removed from the sponge via the split in the state in which the insertion section **12** is inserted through the sponge.

[**0070**] At the time of an operation, the body fluid which flows backward from a gap between the tube body **51** and the insertion section **12** stays in the recessed portion **80** and absorbed in the sponge **82**, thus preventing the liquid leakage from the recessed portion **80**. A water intake port **86** communicates with the recessed portion **80** of the liquid storing part **53** via a thin-diameter tube **84**, and by connecting a suction device such as an injector and a pump to this water intake port **86**, and making the suction device perform a suction operation, the liquid stored in the recessed portion **80**, and the liquid absorbed in the sponge **82** is sucked and removed from the liquid storing part **53**.

[**0071**] Meanwhile, the balloon control device **100** in FIG. **1** is the device which supplies and sucks fluid such as air to and from the first balloon **30**, and supplies and sucks fluid such as air to and from the second balloon **60**. The balloon control device **100** is constructed by a device body **102** including a pump, a sequencer and the like not shown, and a hand switch **104** for remote control.

[**0072**] A front panel of the device body **102** is provided with a power supply switch SW**1**, a stop switch SW**2**, a pressure gauge **106** for the first balloon **30** and a pressure gauge **108** for the second balloon **60**. A tube **110** for supplying/sucking air to and from the first balloon **30**, and a tube **120** for supplying/sucking air to and from the second balloon **60** are attached to the front panel of the device body **102**. Liquid storing tanks **130** and **140** for storing body fluid, which flows backward from the first balloon **30** and the second balloon **60** when the first balloon **30** and the second balloon **60** are broken, are respectively provided at midpoints of the respective tubes **110** and **120**.

[**0073**] Meanwhile, the hand switch **104** is provided with a similar stop switch SW**3** to the stop switch SW**2** at the side of the device body **102**, an ON/OFF switch SW**4** for supporting pressurization/decompression of the first balloon **30**, a pose switch SW**5** for keeping the pressure of the first balloon **30**, an ON/OFF switch SW**6** for supporting pressurization/decompression of the second balloon **60**, and a pose switch SW**7** for keeping the pressure of the second balloon **60**. This hand switch **104** is electrically connected to the device body **102** via a cable **150**.

[**0074**] The balloon control device **100** thus constructed supplies air to the first balloon **30** and the second balloon **60** and inflates the first balloon **30** and the second balloon **60**, and controls the air pressure at a fixed value to keep the first balloon **30** and the second balloon **60** in the inflated state. The balloon control device **100** sucks air from the first balloon **30** and the second balloon **60** and deflates the first balloon **30** and the second balloon **60**, and controls the air pressure at a fixed value to keep the first balloon **30** and the second balloon **60** in the deflated state.

[**0075**] Next, an operation method of the endoscope apparatus will be explained in accordance with FIGS. **6**A to **6**H.

[**0076**] First, as shown in FIG. **6**A, the insertion section **12** is inserted into an intestinal canal (for example, descending limb of duodenum) **70** in the state in which the over tube **50** covers the insertion section **12**. At this time, the first balloon **30** and the second balloon **60** are deflated.

[**0077**] Next, as shown in FIG. **6**B, in the state in which the tip end **58** of the over tube **50** is inserted into a bent portion of the intestinal canal **70**, air is supplied to the second balloon **60** to inflate the second balloon **60**. As a result, the second balloon **60** is caught by the intestinal canal **70**, and the tip end **58** of the over tube **50** is fixed to the intestinal canal **70**.

[**0078**] Next, as shown in FIG. **6**C, only the insertion section **12** of the endoscope **10** is inserted to a deep part of the intestinal canal **70**. Then, as shown in FIG. **6**D, air is supplied to the first balloon **30** to inflate the first balloon **30**. As a result, the first balloon **30** is fixed to the intestinal canal **70**. In this case, the first balloon **30** is smaller in the size at the time of inflation than the second balloon **60**, and therefore the burden exerted on the intestinal canal **70** is small, thus making it possible to prevent damage to the intestinal canal **70**.

[**0079**] Next, after air is sucked from the second balloon **60** to deflate the second balloon **60**, the over tube **50** is pushed in, and inserted along the insertion section **12**, as shown in FIG. **6**E. Then, after the tip end **58** of the over tube **50** is pushed into the vicinity of the first balloon **30**, air is supplied to the second balloon **60** to inflate the second balloon **60** as shown in FIG. **6**F. As a result, the second balloon **60** is fixed to the intestinal canal **70**. Namely, the intestinal canal **70** is gripped by the second balloon **60**.

[0080] Next, as shown in FIG. 6G, the over tube **50** is drawn in. Thereby, the intestinal canal **70** contracts substantially straight, and excessive deflection and bending of the over tube **50** are eliminated. When the over tube **50** is drawn in, both the first balloon **30** and the second balloon **60** are caught in the intestinal canal **70**, but the friction resistance of the first balloon **30** is smaller than the friction resistance of the second balloon **60**. Therefore, even if the first balloon **30** and the second balloon **60** move to relatively separate, the first balloon **30** with small friction resistance slides with respect to the intestinal canal **70**, and therefore, it does not happen that the intestinal canal **70** is damaged by being pulled by both the balloons **30** and **60**.

[0081] Next, as shown in FIG. 6H, air is sucked from the first balloon **30** to deflate the first balloon **30**. Then, the tip end part **36** of the insertion section **12** is inserted into as deep a part of the intestinal canal **70** as possible. Namely, the insertion operation as shown in FIG. 6C is performed again. Thereby, the tip end part **36** of the insertion section **12** can be inserted into a deep part of the intestinal canal **70**. When the insertion section **12** is further inserted into a deep part, the pushing operation as shown in FIG. 6E is performed after the fixing operation as shown in FIG. 6D is performed, the gripping operation as shown in FIG. 6F and the drawing-in operation as shown in FIG. 6G, and the inserting operation as shown in FIG. 6H are repeatedly performed in sequence. Thus, the insertion section **12** can be further inserted into a deep part of the intestinal canal **70**.

[0082] During such an operation, the body fluid which flows backward from the gap between the tube body **51** of the over tube **50** and the insertion section **12** (see FIG. **4**) due to the internal pressure of the intestinal canal **70** stays in the recessed portion **80** of the liquid storing part **53** formed in the gripping part **52**, and therefore, the body fluid flowing backward can be prevented from leaking from the base end opening **52**B of the gripping part **52**.

[0083] The body fluid stored in the liquid storing part **53** can be discharged from the liquid storing part **53** by sucking the body fluid stored in the liquid storing part **53** by the suction device such as an injector connected to the suction port **86**, and therefore, leakage of the body fluid from the liquid storing part **53** due to overflow can be prevented.

[0084] Further, the sponge **82** is housed in the liquid storing part **53**, and therefore, the body fluid stored in the liquid storing part **53** can be held by the sponge **82**. Therefore, leakage of the body fluid from the liquid storing part **53** when the over tube **50** is used upside down in the motion during operation can be prevented. The sponge **82** which sufficiently absorbs the body fluid is taken out of the liquid storing part **53** after the gripping part **52** is detached from the tube body **51**, and exchanged with a new sponge **82**. Thus, the repeated use of the gripping part **52** is possible.

[0085] In the embodiment, the example of the over tube **50** having the balloon is explained, but the present invention can be also applied to a sliding tube which guides the endoscope insertion section into a body cavity without a balloon. The structure of the gripping part **52** is not limited to the example in FIG. **4**, but as shown in FIG. **7**, an opening **88** for opening the liquid storing part **53** is formed in order to make it easy to remove the sponge **82** from the recessed portion **80**, and a donut-shaped cap **90** may be detachably fitted to the opening **88**. According to this structure, the sponge **82** can be easily removed from the recessed portion **80** by only taking the cap **90** from the opening **88**.

[0086] FIG. **8** shows a system schematic diagram of an endoscope apparatus to which an over tube according to a second embodiment of the present invention is applied. The endoscope apparatus shown in the drawing is constructed by an endoscope **110**, an over tube **150**, and a balloon control device **1100**.

[0087] The endoscope **110** includes a hand operation section **114**, and an insertion section **112** connected to the hand operation section **114**. A universal cable **115** is connected to the hand operation section **114**, and a connecter (not shown) connected to a processor and a light source device not shown is provided at a tip end of the universal cable **115**.

[0088] On the hand operation section **114**, an air/water passing button **116**, a suction button **118**, and a shutter button **120** which are operated by an operator are provided in parallel, and a pair of angle knobs **122** and **122** and a forceps insertion section **124** are respectively provided in predetermined positions. Further, the hand operation section **114** is provided with a balloon air port **126** for supplying air to a first balloon **130** and sucking air from the first balloon **130**.

[0089] The insertion section **112** is constructed by a flexible part **132**, a curving part **134** and a tip end rigid part **136**. The curving part **134** is constructed by connecting a plurality of node rings to be able to curve, and is remotely operated to curve by the rotational operation of a pair of angle knobs **122** and **122** provided on the hand operation section **114**. Thereby, a tip end surface **137** of the tip end part **136** can be directed in a desired direction.

[0090] As shown in FIG. **9**, the tip end surface **137** of the tip end part **136** is provided with an object optical system **138**, an illumination lens **140**, an air/water passing nozzle **142**, a forceps port **144** and the like in predetermined positions. An air supply/suction port **128** is provided on an outer peripheral surface of the tip end part **136**, and this air supply/suction port **128** communicates with the balloon air port **126** in FIG. **8** via an air supply tube (not shown) with an inner diameter of about 0.8 mm which is inserted into the insertion section **112**. Accordingly, air is blown out of the air supply/suction port **128** of the tip end part **136** by supplying air to the balloon air port **126**, and on the other hand, air is sucked from the air supply/suction port **128** by sucking air from the balloon airport **126**.

[0091] As shown in FIG. **8**, a first balloon **130** constituted of an elastic body such as rubber is detachably attached to the tip end part **136** of the insertion section **112**. The first balloon **130** is formed by a bulging portion **130***c* in a center and attaching portions **130***a* and **130***b* at both ends of the bulging portion **130***c*, and is attached to the tip end part **136** side so that the air supply/suction port **128** is located inside the bulging portion **130***c* as shown in FIG. **10**. The attaching portions **130***a* and **130***b* are formed to have smaller diameters than the diameter of the tip end portion **136**, and after being closely fitted onto the tip end part **136** with their elastic forces, the attaching portions **130***a* and **130***b* are fixed with threads not shown wound around the attaching portions **130***a* and **130***b*. The fixation is not limited to the thread winding fixation, but the attaching portions **130***a* and **130***b* may be fixed to the tip end part **136** by fitting fixing rings onto the attaching portions **130***a* and **130***b*.

[0092] The first balloon **130** fitted onto the tip end part **136** has its bulging portion **130***c* inflated into a substantially spherical shape by blowing air from the air supply/suction port **128** shown in FIG. **9**. On the other hand, by sucking air from the air supply/suction port **128**, the bulging portion **130***c* is deflated and is closely fitted onto the outer peripheral surface of the tip end part **136**.

[0093] The over tube **150** shown in FIG. **8** is formed by a tube body **151**, and an accordion-shaped extendable and contractible member **152**. The tube body **151** is formed into a cylindrical shape and has a slightly larger inner diameter than an outer diameter of the insertion section **112**, as shown in FIGS. **4** and **5**. The tube body **151** is constructed by coveting an outer side of a flexible resin tube made of urethane or the like with lubricating coat and covering an inner side with the lubricating coat.

[0094] The accordion-shaped extendable and contractible member **152** is made of a flexible resin material constituted of urethane or the like, and a ring-shaped fitting member **153**, which is fixed to a tip end of the accordion-shaped extendable and contractible member **152**, is fitted (connected) onto a base end opening **151**A of the tube body **151** in the watertight state. A ring-shaped fitting member **155** fixed to a base end portion of the accordion-shaped extendable and contractible member **152** is fitted onto (connected to) a fold preventing part (base part of the insertion section) **117** in a substantially circular conical shape, which is formed at the tip end of the hand operating section **114**, in the watertight state via a packing **159** as shown in FIG. **13**. Thereby, the respective base end portions of the over tube **150** and the insertion section **112** are connected by the accordion-shaped extendable and contractible member **152**. By using taper surface of the fold preventing part **117**, fitting of the ring-shaped fitting member **155** can be easily performed in the water tight state.

[0095] As shown in FIG. **8**, a balloon air port **154** is provided at the base end side of the tube body **151**. An air supply tube **156** with an inner diameter of about 1 mm is connected to the balloon air port **154**, and this tube **156** is bonded to an outer peripheral surface of the tube body **151** and is provided to extend to a tip end portion of the tube body **151**, as shown in FIGS. **11** and **12**.

[0096] A tip end **158** of the tube body **151** is formed into a tapered shape. A second balloon **160** constituted of an elastic body such as rubber is fitted onto the base end side of the tip end **158** of the tube body **151**. The second balloon **160** is fitted in the state in which the tube body **151** penetrates through the balloon **160** as shown in FIG. **12**, and is constructed by a bulging portion **160***c*, and attaching portions **160***a* and **160***b* at both ends of the bulging portion **160***c*. The attaching portion **160***a* at the tip end side is folded back to the inside of the bulging portion **160***c*, and the attaching portion **160***a* that is folded back is fixed to the tube body **151** with an X-ray contrast thread **162** wound around the attaching portion **160***a* that is folded back. The attaching portion **160***b* at the base end side is disposed outside the second balloon **160**, and is fixed to the tube body **151** with a thread **164** wound around the attaching portion **160***b*.

[0097] The bulging portion **160***c* is formed into a substantially spherical shape in a natural state (the state in which the bulging portion **160***c* does not inflate or deflate), and as for the size, the bulging portion **160***c* is formed to be larger than the size of the first balloon **130** in a natural state (the state in which the balloon **130** does not inflate or deflate). Accordingly, when the air is supplied to the first balloon **130** and the second balloon **160** at the same pressure, the outer diameter of the bulging portion **160***c* of the second balloon **160** becomes larger than the outer diameter of the bulging portion **130***c* of the first balloon **130**. The outer diameter of the second balloon **160** is constructed so as to be ϕ50 mm when the outer diameter of the first balloon **130** is ϕ25 mm, for example.

[0098] The aforementioned tube **156** is opened in the inside of the bulging portion **160***c*, and an air supply/suction port **157** is formed. Accordingly, when air is supplied from the balloon air port **154**, the air is blown from the air supply/suction port **157** and thereby, the bulging portion **160***c* is inflated. When air is sucked from the balloon air port **154**, the air is sucked from the air supply/suction port **157**, and the second balloon **160** is deflated.

[0099] Reference numeral **166** in FIG. **11** designates an inlet port for filling a lubricating liquid such as water into the tube body **151**, and the inlet port **166** communicates with the base end portion side of the tube body **151** via a tube **168** with a thin diameter.

[0100] Incidentally, the accordion-shaped extendable and contractible member **152** is repeatedly extended and contracted between the most extended state shown in FIG. **14**A and the most contracted state shown in FIG. **14**B during operation of the endoscope. Here, in setting the length of the accordion-shaped extendable and contractible member **152**, the length is set so that a difference A between the most extended time and the most contracted time of the accordion-shaped extendable and contractible member **152** satisfies a moving amount B necessary for the operation of the endoscope (for example, 40 cm<A<60 cm), and keeps a space C by which the tip end **158** of the over tube **150** dose not abut to the first balloon **130** at the most extended time. The length of the accordion-shaped extendable and contractible member **152** is adjusted by the length of the pleat and the number of pleats of the accordion-shaped member.

[0101] Meanwhile, the balloon control device **1100** in FIG. **8** is the device which supplies and sucks fluid such as air to and from the first balloon **130**, and supplies and sucks fluid such as air to and from the second balloon **160**. The balloon control device **1100** is constructed by a device body **1102** including a pump, a sequencer and the like not shown, and a hand switch **1104** for remote control.

[0102] A front panel of the device body **1102** is provided with a power supply switch SW**1**, a stop switch SW**2**, a pressure gauge **1106** for the first balloon **130** and a pressure gauge **1108** for the second balloon **160**. A tube **1110** for supplying/sucking air to and from the first balloon **130**, and a tube **1120** for supplying/sucking air to and from the second balloon **160** are attached to the front panel of the device body **1102**. Liquid storing tanks **1130** and **1140** for storing body fluid, which flows backward from the first balloon **130** and the second balloon **160** when the first balloon **130** and the second balloon **160** are broken, are respectively provided at midpoints of the respective tubes **1110** and **1120**.

[0103] Meanwhile, the hand switch **1104** is provided with a similar stop switch SW**3** to the stop switch SW**2** at the side of the device body **1102**, an ON/OFF switch SW**4** for

supporting pressurization/decompression of the first balloon **130**, a pose switch SW**5** for keeping the pressure of the first balloon **130**, an ON/OFF switch SW**6** for supporting pressurization/decompression of the second balloon **160**, and a pose switch SW**7** for keeping the pressure of the second balloon **160**. This hand switch **1104** is electrically connected to the device body **1102** via a cable **1150**.

[**0104**] The balloon control device **1100** which is constructed as above supplies air to the first balloon **130** and the second balloon **160** and inflates the first balloon **130** and the second balloon **160**, and controls the air pressure at a fixed value to keep the first balloon **130** and the second balloon **160** in the inflated state. The balloon control device **1100** sucks air from the first balloon **130** and the second balloon **160** and deflates the first balloon **130** and the second balloon **160**, and controls the air pressure at a fixed value to keep the first balloon **130** and the second balloon **160** in the deflated state.

[**0105**] Next, an operation method of the endoscope apparatus will be explained in accordance with FIGS. **15**A to **15**H.

[**0106**] First, as shown in FIG. **15**A, the insertion section **112** is inserted into an intestinal canal (for example, descending limb of duodenum) **170** in the state in which the over tube **150** covers the insertion section **112**. At this time, the first balloon **130** and the second balloon **160** are deflated.

[**0107**] Next, as shown in FIG. **15**B, in the state in which the tip end **158** of the over tube **150** is inserted up to a bent portion of the intestinal canal **170**, air is supplied to the second balloon **160** to inflate the second balloon **160**. As a result, the second balloon **160** is caught by the intestinal canal **170**, and the tip end **158** of the over tube **150** is fixed to the intestinal canal **170**.

[**0108**] Next, as shown in FIG. **15**C, only the insertion section **112** of the endoscope **110** is inserted into a deep part of the intestinal canal **170**. Then, as shown in FIG. **15**D, air is supplied to the first balloon **130** to inflate the first balloon **130**. As a result, the first balloon **130** is fixed to the intestinal canal **170**. In this case, the first balloon **130** is smaller in size at the time of inflation than the second balloon **160**, and therefore, the burden exerted on the intestinal canal **170** is small, thus making it possible to prevent damage to the intestinal canal **170**.

[**0109**] Next, after air is sucked from the second balloon **160** to deflate the second balloon **160**, the over tube **150** is pushed in, and inserted along the insertion section **112**, as shown in FIG. **15**E. Then, after the tip end **158** of the over tube **150** is pushed into the vicinity of the first balloon **130**, air is supplied to the second balloon **160** to inflate the second balloon **160** as shown in FIG. **15**F. As a result, the second balloon **160** is fixed to the intestinal canal **170**. Namely, the intestinal canal **170** is gripped by the second balloon **160**.

[**0110**] Next, as shown in FIG. **15**G, the over tube **150** is drawn in. Thereby, the intestinal canal **170** contracts substantially straight, and excessive deflection and bending of the over tube **150** are eliminated. When the over tube **150** is drawn in, both the first balloon **130** and the second balloon **160** are caught in the intestinal canal **170**, but the friction resistance of the first balloon **130** is smaller than the friction resistance of the second balloon **160**. Therefore, even if the first balloon **130** and the second balloon **160** move to separate from each other, the first balloon **130** with small friction resistance slides with respect to the intestinal canal **170**, and therefore, it does not happen that the intestinal canal **170** is damaged by being pulled by both the balloons **130** and **160**.

[**0111**] Next, as shown in FIG. **15**H, air is sucked from the first balloon **130** to deflate the first balloon **130**. Then, the tip end part **136** of the insertion section **112** is inserted into as deep a part of the intestinal canal **170** as possible. Namely, the insertion operation as shown in FIG. **15**C is performed again. Thereby, the tip end part **136** of the insertion section **112** can be inserted into a deep part of the intestinal canal **170**. When the insertion section **112** is further inserted into a deep part, the pushing operation as shown in FIG. **15**E is performed after the fixing operation as shown in FIG. **15**D is performed, and the gripping operation as shown in FIG. **15**F, the drawing-in operation as shown in FIG. **15**G, and the inserting operation as shown in FIG. **15**H are repeatedly performed in sequence. Thus, the insertion section **112** can be further inserted into a deep part of the intestinal canal **170**.

[**0112**] During such an operation by the endoscope apparatus, the body fluid flowing backward from the gap between the over tube **150** and the insertion section **112** flows into the accordion-shaped extendable and contractible member **152** attached in the watertight state to the base end portion of the over tube **150**. The base end portion of the accordion-shaped extendable and contractible member **152** is fitted onto the fold prevention part **117** in the watertight state via the ring-shaped fitting member **155** and the packing **159**, and therefore, the body fluid does not leak out of the base end portion of the accordion-shaped extendable and contractible member **152**. Thereby, leakage of the body fluid flowing backward from the inside of the intestinal canal can be prevented. The accordion-shaped extendable and contractible member **152** extends and contracts in its axial direction, namely, in the inserting direction of the over tube **150** and the insertion section **112**, and therefore, the inserting operation and the drawing-in operation of the over tube **150** and the insertion section **112** can be performed smoothly.

[**0113**] Further, according to the over tube **150**, the accordion-shaped extendable and contractible member **152** is formed to have the length such that the tip end part **158** of the over tube **150** does not contact the first balloon **130** when the accordion-shaped extendable and contractible member **152** is extended most as shown in FIG. **14**A. As a result, at the stroke end at the time of insertion of the over tube **150** shown in FIG. **14**A, breakage of the first balloon **130** due to contact/abutment of the tip end part **158** of the over tube **150** can be prevented.

[**0114**] In the embodiment, the accordion-shaped extendable and contractible member **152** with the extending and contracting direction having directivity in one direction is explained, but the form of the member does not matter if only the member is extendable and contractible. For example, as shown in FIGS. **16**A and **16**B, a bag-shaped member **180** having no directivity in the extending and contracting direction as an extending and contracting member can be applied. In this case, a restraining linear element **182** such as a wire and a string which restrains the most extended amount of the bag-shaped member **180** is attached

to the bag-shaped member **180** so that the tip end **158** of the over tube **150** does not contact the first balloon **130** at the most extended time.

[**0115**] Namely, the bag-shaped member **180** is formed into a cylindrical shape with its both ends opened, and ring-shaped linear element support members **184** and **186** are fixed to the openings at both ends, and both end portions of a plurality of linear elements **182**, **182** . . . are fixed to these linear element support members **184** and **186**. The linear element **182** is formed to have such length as to prevent the tip end **158** of the over tube **150** from contacting the first balloon **130** when the linear element **182** is extended most (the most extended time) as in FIG. **16**A. The linear element support member **184** is fixed to the base end portion of the tube body **151**, and the linear element supporting member **186** is fixed to the ring-shaped fitting member **155**. Reference character A in FIGS. **16**A and **16**B designates the difference between the most extended time and the most contracted time of the bag-shaped member **180**, and reference character B designates a necessary moving amount at the time of operation of the endoscope. Reference character C designates a space between the tip end **158** of the over tube **150** and the first balloon **130** when the bag-shaped member **180** is contracted most.

[**0116**] FIGS. **17**A and **17**B show an example in which a drain port **188** is provided at the base end portion side of the accordion-shaped extendable and contractible member **152**. This drain port **188** is provided at a rigid pipe body **190** so that the drain port **188** is not crushed when the accordion-shaped extendable and contractible member **152** is contracted. The base end portion of the accordion-shaped extendable and contractible member **152** is fixed to this pipe body **190**, whereby the drain port **188** is provided to penetrate the base end portion of the accordion-shaped extendable and contractible member **152**. This pipe body **190** is fixed to the ring-shape fitting member **155**.

[**0117**] According to the over tube **150** having the drain port **188** like this, by connecting a suction pump **192** to the drain port **188**, the body fluid which is stored in a gap between the accordion-shape extendable and contractible member **152** and the insertion section **112** can be discharged outside from the gap by the suction pump **192**. Instead of using the pump **192**, the body fluid stored in the gap can be discharged outside from the drain port **188** by pumping action which occurs at the time of contraction of the accordion-shaped extendable and contractible member **152**.

[**0118**] FIG. **18** shows a system schematic diagram of an endoscope apparatus to which an insertion assisting tool according to the present invention is applied. The endoscope apparatus shown in the drawing is constructed by an endoscope **210**, an over tube (corresponding to the insertion assisting tool) **250**, and a balloon control device **2100**.

[**0119**] The endoscope **210** includes a hand operation section **214**, and an insertion section **212** connected to the hand operation section **214**. A universal cable **215** is connected to the hand operation section **214**, and a connecter (not shown) connected to a processor and a light source device not shown is provided at a tip end of the universal cable **215**.

[**0120**] On the hand operation section **214**, an air/water passing button **216**, a suction button **218**, and a shutter button **220** which are operated by an operator are provided in parallel, and a pair of angle knobs **222** and **222**, and a forceps insertion section **224** are provided at the respective positions. Further, the hand operation section **214** is provided with a balloon air port **226** for supplying air to a first balloon **230** and sucking air from the balloon **230**.

[**0121**] The insertion section **212** is constructed by a flexible part **232**, a curving part **234** and a tip end part **236**. The curving part **234** is constructed by connecting a plurality of node rings to be able to curve, and is remotely operated to curve by the rotational operation of a pair of angle knobs **222** and **222** provided on the hand operation section **214**. Thereby, a tip end surface **237** of the tip end part **236** can be directed in a desired direction.

[**0122**] As shown in FIG. **19**, the tip end surface **237** of the tip end part **236** is provided with an object optical system **238**, an illumination lens **240**, an air/water passing nozzle **242**, a forceps port **244** and the like in predetermined positions. An air supply/suction port **228** is provided on an outer peripheral surface of the tip end part **236**, and this air supply/suction port **228** communicates with the balloon air port **226** in FIG. **18** via an air supply tube (not shown) with an inner diameter of about 0.8 mm which is inserted through the insertion section **212**. Accordingly, air is blown out of the air supply/suction port **228** of the tip end part **236** by supplying air into the balloon air port **226**, and on the other hand, air is sucked from the air supply/suction port **228** by sucking air from the balloon air port **226**.

[**0123**] As shown in FIG. **18**, the first balloon **230** constituted of an elastic body such as rubber is detachably attached to the tip end part **236** of the insertion section **212**. The first balloon **230** is formed by a bulging portion **230***c* in a center and attaching portions **230***a* and **230***b* at both ends of the bulging portion **230***c*, and is attached to the tip end part **236** side so that the air supply/suction port **228** is located inside the bulging portion **230***c* as shown in FIG. **20**. The attaching portions **230***a* and **230***b* are formed to have smaller diameters than the diameter of the tip end part **236**, and after being closely fitted onto the tip end part **236** with their elastic forces, the attaching portions **230***a* and **230***b* are fixed with threads not shown wound around the attaching portions **230***a* and **230***b*. The fixation is not limited to the thread winding fixation, but the attaching portions **230***a* and **230***b* may be fixed to the tip end part **236** by fitting fixing rings onto the attaching portions **230***a* and **230***b*.

[**0124**] The first balloon **230** fitted onto the tip end part **236** has its bulging portion **230***c* inflated into a substantially spherical shape by blowing air from the air supply/suction port **228** shown in FIG. **19**. On the other hand, by sucking air from the air supply/suction port **228**, the bulging portion **230***c* is deflated and is closely fitted onto the outer peripheral surface of the tip end part **236**.

[**0125**] The over tube **250** shown in FIG. **18** is formed by a tube body **251**, and a gripping part **252** to which a tube **280** having the function of a check valve is fitted. The tube body **251** is formed into a cylindrical shape and has a slightly larger inner diameter than an outer diameter of the insertion section **212**, as shown in FIG. **21**. The tube body **251** is constructed by covering an outer side of a flexible resin tube made of urethane or the like with lubricating coat and covering an inner side with the lubricating coat. The insertion section **212** is inserted toward the tube body **251** from the base end opening **252**A of the gripping part **252** as shown in FIG. **22**.

[0126] As shown in FIG. **18**, a balloon air port **254** is provided at the base end side of the tube body **251**. An air supply tube **256** with an inner diameter of about 1 mm is connected to the balloon air port **254**, and this tube **256** is bonded to an outer peripheral surface of the tube body **251** and is provided to extend to a tip end portion of the tube body **251**.

[0127] A tip end **258** of the tube body **251** is formed into a tapered shape. A second balloon **260** constituted of an elastic body such as rubber is fitted onto the base end side of the tip end **258** of the tube body **251**. The second balloon **260** is fitted in the state in which the tube body **251** penetrates through the balloon **260**, and is constructed by a bulging portion **260***c* in a center, and attaching portions **260***a* and **260***b* at both ends of the bulging portion **260***c* as shown in FIG. **21**. The attaching portion **260***a* at the tip end side is folded back to the inside of the bulging portion **260***c*, and the attaching portion **260***a* that is folded back is fixed to the tube body **251** with an X-ray contrast thread **262** wound around the attaching portion **260***a* that is folded back. The attaching portion **260***b* at the base end side is disposed outside the second balloon **260**, and is fixed to the tube body **251** with a thread **264** wound around the attaching portion **260***b*.

[0128] The bulging portion **260***c* is formed into a substantially spherical shape in a natural state (the state in which the bulging portion **260***c* does not inflate or deflate), and as for the size, the bulging portion **260***c* is formed to be larger than the size of the first balloon **230** in a natural state (the state in which the balloon **230** does not inflate or deflate). Accordingly, when the air is supplied to the first balloon **230** and the second balloon **260** at the same pressure, the outer diameter of the bulging portion **260***c* of the second balloon becomes larger than the outer diameter of the bulging portion **230***c* of the first balloon **230**. The outer diameter of the second balloon **260** is constructed to be ϕ50 mm when the outer diameter of the first balloon **230** is ϕ25 mm, for example.

[0129] The aforementioned tube **256** is opened in the inside of the bulging portion **260***c*, where an air supply/suction port **257** is formed. Accordingly, when air is supplied from the balloon air port **254**, the air is blown from the air supply/suction port **257**, and thereby, the bulging portion **260***c* is inflated. When air is sucked from the balloon air port **254**, the air is sucked from the air supply/suction portion **257**, and the second balloon **260** is deflated. Reference numeral **266** in FIG. **22** designates an inlet port for filling a lubricating liquid such as water into the tube body **251**, and the inlet port **266** communicates with the base end portion side of the tube body **251** via a tube **268** with a thin diameter.

[0130] Incidentally, the tube **280** shown in FIG. **22** is formed into a substantially cylindrical shape by an elastic body such as natural rubber or synthetic rubber. Among openings at both ends of the tube **280**, an opening **282** fitted onto the gripping part (the base end portion, at the side of the hand operation section, of the insertion assisting tool) **252** is formed to be smaller than the outer diameter of the base end part **253** of the gripping part **252**. As a result, the tube **280** is fitted onto the gripping part **252** in the state in which the opening **282** is expanded in diameter with the elastic force as shown in FIG. **23**. Namely, an edge portion **283** of the opening **282** of the tube **280** is closely fitted onto an outer surface of the gripping part **252** with the elastic force.

[0131] Among the openings at the both ends of the tube **280**, an opening **284** which is fitted onto an outer surface of the insertion section **212** is formed to be smaller than the diameter of the insertion section **212** as shown in FIG. **22**. The insertion section **212** is pushed into this opening **284** with the tip end part **236** inserted first as shown in FIG. **24**A, whereby an edge portion **285** of the opening **284** is extended in diameter with the elasticity and closely fitted onto the insertion section **212**. The diameter of the opening **284** of the tube is set at 70% to 90% of the outer diameter of the insertion section **212**. Thereby, the insertion section **212** is closely fitted to the edge portion **285** of the opening **284** with the elasticity and inserted through the opening **284** slidably with respect to the opening **284**.

[0132] Meanwhile, the balloon control device **2100** in FIG. **18** is the device which supplies and sucks fluid such as air to and from the first balloon **230**, and supplies and sucks fluid such as air to and from the second balloon **260**. The balloon control device **2100** is constructed by a device body **2102** including a pump, a sequencer and the like not shown, and a hand switch **2104** for remote control.

[0133] A front panel of the device body **2102** is provided with a power supply switch SW**1**, a stop switch SW**2**, a pressure gauge **2106** for the first balloon **230** and a pressure gauge **2108** for the second balloon **260**. A tube **2110** for supplying/sucking air to and from the first balloon **230**, and a tube **2120** for supplying/sucking air to and from the second balloon **260** are attached to the front panel of the device body **2102**. Liquid storing tanks **2130** and **2140** for storing body fluid, which flows backward from the first balloon **230** and the second balloon **260** when the first balloon **230** and the second balloon **260** are broken, are respectively provided at midpoints of the respective tubes **2110** and **2120**.

[0134] Meanwhile, the hand switch **2104** is provided with a similar stop switch SW**3** to the stop switch SW**2** at the side of the device body **2102**, an ON/OFF switch SW**4** for supporting pressurization/decompression of the first balloon **230**, a pose switch SW**5** for keeping the pressure of the first balloon **230**, an ON/OFF switch SW**6** for supporting pressurization/decompression of the second balloon **260**, and a pose switch SW**7** for keeping the pressure of the second balloon **260**. This hand switch **2104** is electrically connected to the device body **2102** via a cable **2150**.

[0135] The balloon control device **2100** which is constructed as above supplies air to the first balloon **230** and the second balloon **260** and inflates the first balloon **230** and the second balloon **260**, and controls the air pressure at a fixed value to keep the first balloon **230** and the second balloon **260** in the inflated state. The balloon control device **2100** sucks air from the first balloon **230** and the second balloon **260** and deflates the first balloon **230** and the second balloon **260**, and controls the air pressure at a fixed value to keep the first balloon **230** and the second balloon **260** in the deflated state.

[0136] Next, an operation method of the endoscope apparatus will be explained in accordance with FIGS. **25**A to **25**H.

[0137] First, as shown in FIG. **25**A, the insertion section **212** is inserted into an intestinal canal (for example, descending limb of duodenum) **270** in the state in which the over tube **250** covers the insertion section **212**. At this time, the first balloon **230** and the second balloon **260** are deflated.

[0138] Next, as shown in FIG. **25**B, in the state in which the tip end **258** of the over tube **250** is inserted up to a bent portion of the intestinal canal **270**, air is supplied to the second balloon **260** to inflate the second balloon **260**. As a result, the second balloon **260** is caught in the intestinal canal **270**, and the tip end **258** of the over tube **250** is fixed to the intestinal canal **270**.

[0139] Next, as shown in FIG. **25**C, only the insertion section **212** of the endoscope **210** is inserted into a deep part of the intestinal canal **270**. Then, as shown in FIG. **25**D, air is supplied to the first balloon **230** to inflate the first balloon **230**. As a result, the first balloon **230** is fixed to the intestinal canal **270**. In this case, the first balloon **230** is smaller in size at the time of inflation than the second balloon **260**, and therefore, the burden exerted on the intestinal canal **270** is small, thus making it possible to prevent damage to the intestinal canal **270**.

[0140] Next, after air is sucked from the second balloon **260** to deflate the second balloon **260**, the over tube **250** is pushed in, and inserted along the insertion section **212**, as shown in FIG. **25**E. Then, after the tip end **258** of the over tube **250** is pushed into the vicinity of the first balloon **230**, air is supplied to the second balloon **260** to inflate the second balloon **260** as shown in FIG. **25**F. As a result, the second balloon **260** is fixed to the intestinal canal **270**. Namely, the intestinal canal **270** is gripped by the second balloon **260**.

[0141] Next, as shown in FIG. **25**G, the over tube **250** is drawn in. Thereby, the intestinal canal **270** contracts substantially straight, and excessive deflection and bending of the over tube **250** are eliminated. When the over tube **250** is drawn in, both the first balloon **230** and the second balloon **260** are caught in the intestinal canal **270**, but the friction resistance of the first balloon **230** is smaller than the friction resistance of the second balloon **260**. Therefore, even if the first balloon **230** and the second balloon **260** move to separate from each other, the first balloon **230** with small friction resistance slides with respect to the intestinal canal **270**, and therefore, it does not happen that the intestinal canal **270** is damaged by being pulled by both the balloons **230** and **260**.

[0142] Next, as shown in FIG. **25**H, air is sucked from the first balloon **230** to deflate the first balloon **230**. Then, the tip end part **236** of the insertion section **212** is inserted into as deep a part of the intestinal canal **270** as possible. Namely, the insertion operation as shown in FIG. **25**C is performed again. Thereby, the tip end part **236** of the insertion section **212** can be inserted into a deep part of the intestinal canal **270**. When the insertion section **212** is further inserted into a deep part, the pushing operation as shown in FIG. **25**E is performed after the fixing operation as shown in FIG. **25**D is performed, the gripping operation as shown in FIG. **25**F and the drawing-in operation as shown in FIG. **25**G, and the inserting operation as shown in FIG. **25**H are repeatedly performed in sequence. Thus, the insertion section **212** can be further inserted into the deep part of the intestinal canal **270**.

[0143] During such an operation, the body fluid which flows backward from the gap between the tube body **251** of the over tube **250** and the insertion section **212** (see FIG. **21**) due to internal pressure of the intestinal canal **270** is stored in the tube **280** without leaking out of the tube **280** because the edge portion **283** of the opening **282** of the tube **280** is attached to be closely fitted onto the gripping part **252** by the elastic force and the edge portion **285** of the opening **284** of the tube **280** is attached to be closely fitted onto the insertion section **212** by the elastic force as shown in FIG. **24**A, and thus, the tube **280** exhibits the function of the check valve. As a result, leakage of the body fluid can be prevented.

[0144] In order to improve slip property of the insertion section **212** with respect to the over tube **250**, in the over tube **250** shown in FIG. **18**, a lubricating liquid is supplied to the over tube **250** from the inlet port **266** via the tube **268**. By storing the lubricating liquid in the tube **280** and allowing the tube **280** have the pot function, it is made possible to fill the lubricating liquid in the gap between the over tube **250** and the insertion section **212**. As a result, favorable slip property can be always obtained. Further, by the lubricating liquid pot function of the tube **280**, the supply amount and the number of times of supply of the lubricating liquid from the inlet port **266** can be reduced.

[0145] Incidentally, in the endoscope apparatus including the over tube **250**, the insertion section **212** is inserted into the base end portion of the gripping part **252** with some degree of freedom with respect to the base end portion as shown in FIG. **22** in consideration of operability of insertion and extraction of the insertion section **212** with respect to the over tube **250**. Namely, a space S between the gripping part **252** and the insertion section **212** is set to be comparatively larger than spaces at the other positions, and insertion and extraction operability of the operator is enhanced by making the insertion and extraction direction of the insertion section **212** properly changeable by using the space S. Accordingly, in the case where the tube **280** is fitted onto the insertion section **212**, it is also necessary to keep the insertion and extraction operability.

[0146] Thus, the tube **280** of this embodiment is formed in the size which satisfies the formula $d>a-c+(b-a)/2$, where the inner diameter of the gripping part **252** of the over tube **250** is a, the maximum diameter of the tube **280** when the tube **280** is attached to the gripping part **252** (the outer diameter of the base end part **253** of the gripping part **252**) is b, the diameter of the opening **284** of the tube **280** is c, and the shortest distance from the fixed portion B of the tube **280** to the gripping part **252** to the edge portion **285** of the opening **284** of the tube **280** is d as shown in FIG. **26**. Namely, as shown by the chain double-dashed line in FIG. **26**, the distance d is set to be longer than the distance e which is from the fixed portion **252**B to the insertion section **212** when the insertion section **212** is put aside as much as possible by using the space S (see FIG. **22**).

[0147] As a result, even when the insertion section **212** is put aside as much as possible by using the space S, slackness occurring to a circular conical portion **281** (see FIG. **22**) which is the length d portion of the tube **280** does not disappear. Therefore, at the time of insertion and extraction operation using the space S of the tube **280** as shown in FIGS. **24**B and **24**C, the insertion section **212** does not receive any compelling force from the circular conical portion **281**, and therefore, insertion and extraction operability can be maintained.

[0148] In the embodiment, the over tube which is used for inspection of a small intestine is explained as the insertion assisting tool, but the present invention is not limited to this, and tube **280** may be fitted onto a sliding tube which is used for inspection of a large intestine.

1-5. (canceled)

6. The insertion assisting tool for an endoscope of claim 12, further comprising:

a cylindrical extendable and contractible member connecting respective base end parts of the insertion section of the endoscope and the insertion assisting tool in which the insertion section of the endoscope is inserted, said cylindrical extendable and contractible member covering the insertion section.

7. The insertion assisting tool for an endoscope according to claim 6, wherein the extendable and contractible member is an accordion-shaped member.

8. The insertion assisting tool for an endoscope according to claim 6, wherein the extendable and contractible member is formed to have length by which a tip end part of the insertion assisting tool does not contact a first balloon of the insertion section when the extendable and contractible member is operated to extend most.

9. The insertion assisting tool for an endoscope according to claim 6, wherein a drain port is formed at the extendable and contractible member.

10. An insertion assisting tool for an endoscope into which an insertion section of the endoscope is inserted, comprising:

a substantially cylindrical tube formed of an elastic body in which a smaller opening than a diameter of a base end part of the insertion assisting tool is formed at one end and a smaller opening than a diameter of the endoscope insertion section is formed at the other end,

wherein in the tube, the opening formed at the one end is attached to the base end part of the insertion assisting tool in close contact with the base end part, and the insertion section is slidably inserted through the tube with the insertion section of the endoscope closely fitted in the opening formed at the other end.

11. The insertion assisting tool for an endoscope according to claim 10, wherein the tube is formed in a size which satisfies a formula of

$$d>a-c+(b-a)/2$$

where an inner diameter of the insertion assisting tool is a,

a maximum diameter of the tube when the tube is attached to the insertion assisting tool is b,

a diameter of an opening formed at the other end of the tube is c, and

a distance from a fixing portion of the tube to the insertion assisting tool to an edge portion of the opening formed at the other end of the tube is d.

12. An insertion assisting tool for an endoscope into which an insertion section of the endoscope is inserted from a base end portion side, comprising:

a fluid sealing device disposed at the base end portion side which seals a space between a base end part of the insertion assisting tool and the endoscope insertion section, the space being formed while the insertion section of the endoscope is inserted into the insertion assisting tool,

wherein said fluid scaling device connects respective base end portions of the insertion section of the endoscope and the insertion assisting tool and is cover member which covers the insertion section of the endoscope such that directions of insertion and drawing-in of the insertion section of the endoscope are changeable pivotally.

* * * * *