May 7, 1929. A. I. ABRAHAMS ET AL 1,711,514

ELECTROMAGNETIC DRIVING UNIT

Filed May 28, 1928 2 Sheets-Sheet 1

Fig. 1.

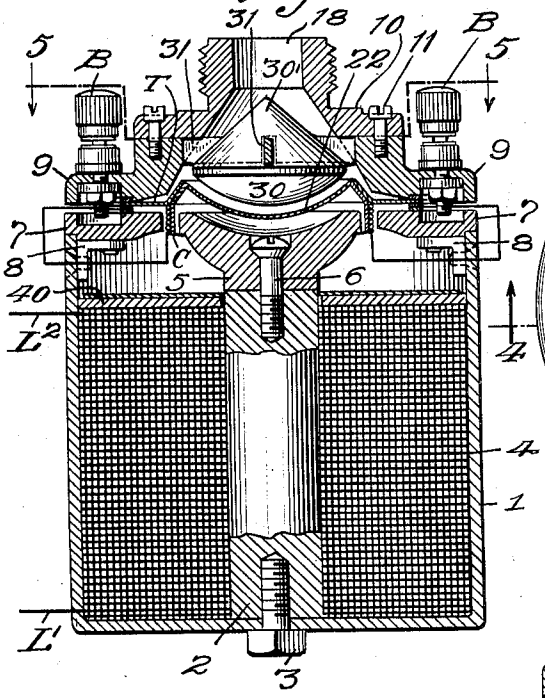

Fig. 3.

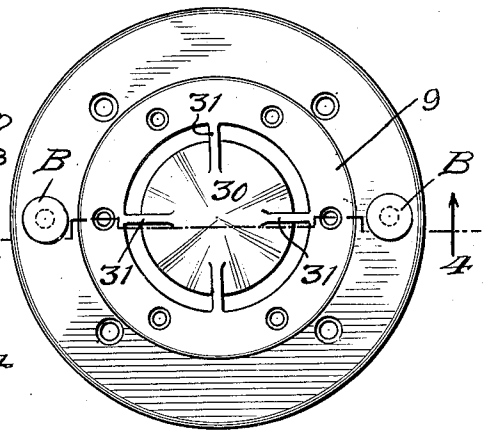

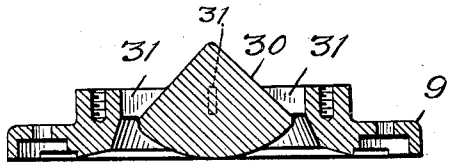

Fig. 4.

Fig. 2.

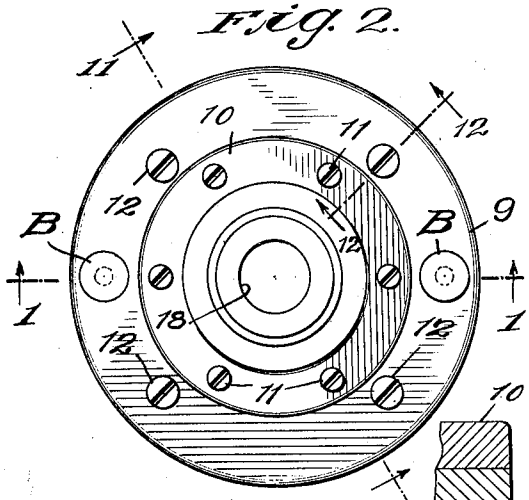

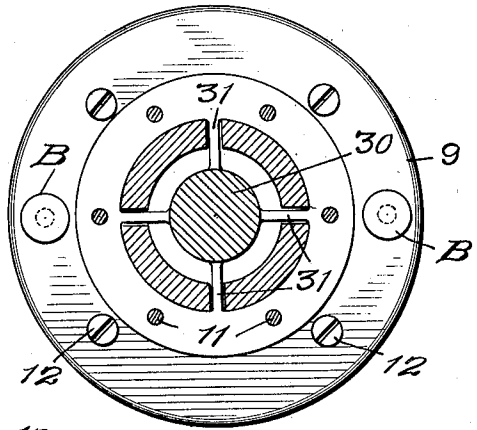

Fig. 5.

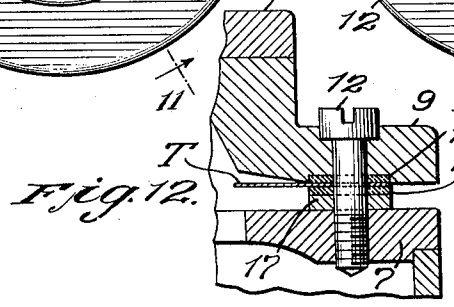

Fig. 12.

INVENTORS
Alexander I. Abrahams
Edward J. Jonasens
BY
Mode & Blum
ATTORNEYS

May 7, 1929. A. I. ABRAHAMS ET AL 1,711,514

ELECTROMAGNETIC DRIVING UNIT

Filed May 28, 1928 2 Sheets-Sheet 2

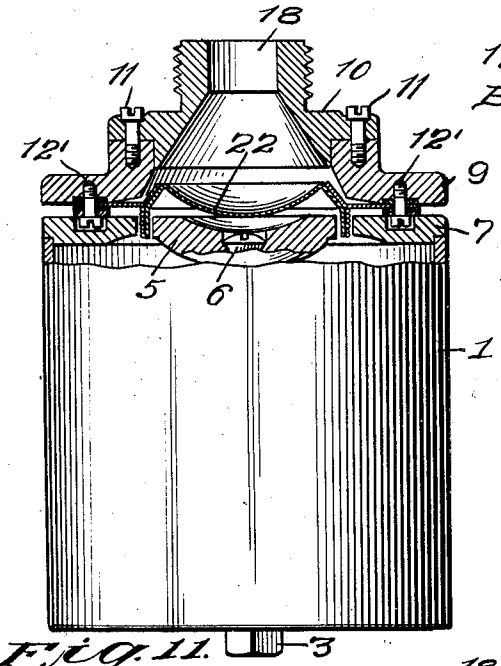

Fig. 11.

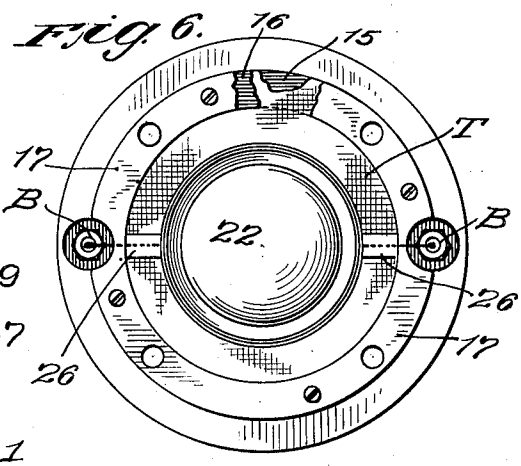

Fig. 6.

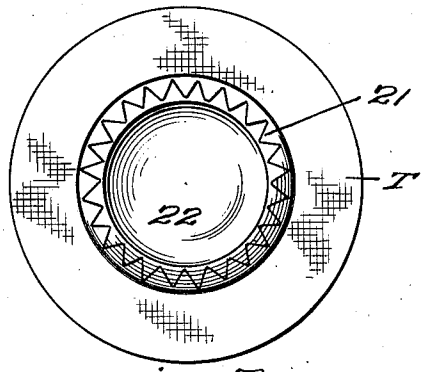

Fig. 7.

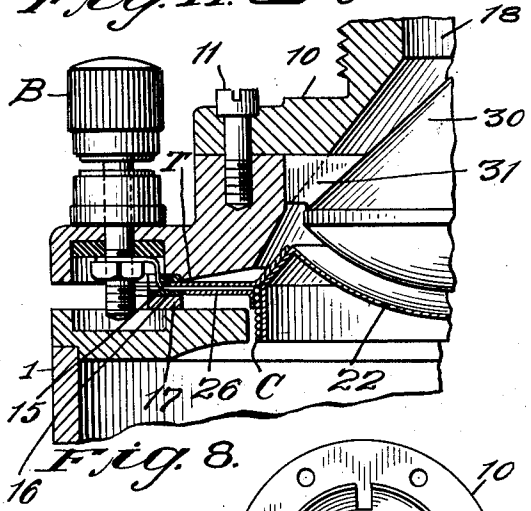

Fig. 8.

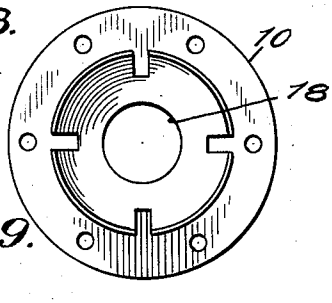

Fig. 9.

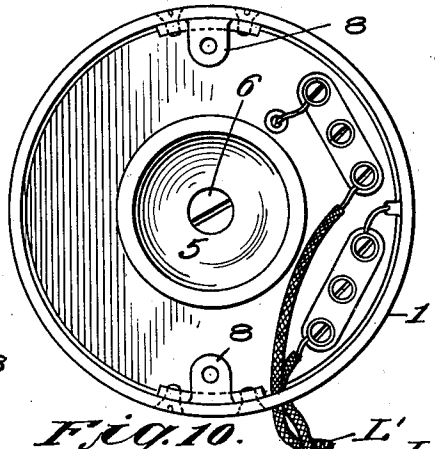

Fig. 10.

INVENTORS
Alexander I. Abrahams
Edward J. Jonssens,
BY
Mock & Blum
ATTORNEYS

Patented May 7, 1929. 1,711,514

UNITED STATES PATENT OFFICE.

ALEXANDER I. ABRAHAMS AND EDWARD J. JONSSENS, OF NEW YORK, N. Y., ASSIGNORS TO DYNAMIC UNIT CORPORATION OF AMERICA, OF NEW YORK, N. Y., A CORPORATION OF NEW YORK.

ELECTROMAGNETIC DRIVING UNIT.

Application filed May 28, 1928. Serial No. 281,052.

Our invention relates to a new and improved electromagnetic driving unit for loud speakers and other sound reproducing apparatus.

One of the objects of our invention is to provide an improved driving unit of the electro-dynamic type.

Another object of our invention is to provide an improved diaphragm construction for a unit of this type whereby said diaphragm will consist of a central, light and relatively rigid portion, which is connected to a suitable support by an outer member made of flexible material having little or no inherent resilience so that said central diaphragm portion can reciprocate with a substantial piston-like action, to produce large volume over the entire range of audible tones, with substantially equal emphasis upon the various tones in said audible range.

Another object of our invention is to provide a diaphragm construction which may be used with a driving unit of any type, said diaphragm comprising a central light and relatively rigid metal portion, connected at its periphery to an annular flexible member which is clamped or otherwise connected to a suitable mount.

Another object of our invention is to provide a properly designed tone chamber in which the diaphragm operates, so that annular wave forms will be transmitted to the throat of the device, which may be connected to a horn or to other suitable sound projector.

Other objects of our invention are to make a device of the type described which can be very simply and cheaply constructed in comparison with existing devices of this type.

Another object of our invention is to design a diaphragm for a driving unit of the electro-dynamic type, in which the actuating coil is directly wound on the lower portion of the diaphragm.

Other objects of our invention will be set forth in the following description and drawings which illustrate preferred embodiments thereof, it being understood that the above general statement of the objects of our invention is intended merely to generally explain the same and not to limit it in any manner.

Fig. 1 is a sectional view on the line 1—1 of Fig. 2.

Fig. 2 is a plan view of Fig. 1.

Fig. 3 is a plan view of the conical tone deflector.

Fig. 4 is a sectional view on the line 4—4 of Fig. 3.

Fig. 5 is a sectional view on the line 5—5 of Fig. 1.

Fig. 6 is a bottom view of the diaphragm, and frame therefor.

Fig. 7 is a detail plan view showing the diaphragm and the flexible mounting member therefor.

Fig. 8 is an enlarged detail sectional view showing the diaphragm and the appurtenant parts.

Fig. 9 is a bottom plan view of the conical tone deflector.

Fig. 10 is a detail top view.

Fig. 11 illustrates a modified form of the invention in which the conical tone deflector is not untilized.

Fig. 12 is an enlarged detail sectional view showing how certain of the parts illustrated in Fig. 1 are connected.

The device comprises a shell 1 which is made of soft iron, like the other parts of the magnetic circuit. The shell 1 has a central core or spool 2, which is also made of soft iron and which may either be formed integral with the shell 1, or may be made separable therefrom and be connected thereto by bolt 3. The field coil 4 which is made of a suitable number of turns of insulated wire, may be wound upon the soft iron core 2, or it may be wound upon a support or form which can be slipped into position over the core 2. The top of the coil is enclosed by an annular plate 40, which is also made of aluminum or other suitable non-magnetic material and which is held in place by any suitable fastening means.

The core 2 is provided with an enlarged head 5, also made of soft iron and this is held in position by means of a countersunk screw 6. The top of the shell 1 is provided with an annular keeper 7 which is also made of soft iron. This keeper 7 is connected by means of suitable screws to lugs 8 of the said shell 1.

The ends of the field coil 4 are connected to leads L', L^2 which are connected to any

suitable source of direct current. The shell 1 and the magnetic keeper 7 form parts of a magnetic circuit which has an annular air gap, namely, the annular air gap between the head 5 of the core 2, and the adjacent circular wall of the keeper 7. The diaphragm 22 is preferably made of light, strong non-magnetic metal or metal alloy such as duralumin, for example. The diaphragm 22 should be made as light as possible so as to respond to the actuating force. However, it is a great advantage of our invention that said diaphragm need not be made uniform as in previous devices operating upon the electro-dynamic principle. The diaphragm 22 is provided with a depending flange upon which the actuating coil C can be wound. The said coil C consists of a suitable number of turns of insulated wire, it being understood that as many turns as desired could be utilized, and that in this respect as well as in other respects the drawings are diagrammatic.

In the particular embodiment shown herein, the depending flange upon which the coil C is mounted, is integral with the diaphragm 22. However, we do not wish to be limited to this integral construction as the said coil C could be wound upon any suitable core, made of metallic or non-metallic material, which could be connected in any suitable manner to the diaphragm 22, so as to occupy the position illustrated in Fig. 1. While the diaphragm 22 is made of very thin material, the shape into which it is stamped gives it sufficient rigidity to permit it to vibrate in a substantially piston-like manner. It is possible that when a large volume of sound is being delivered, that the said diaphragm 22 may be vibrated so energetically, as to cause it to be slightly flexed. However, its main action is to vibrate in a substantially piston-like manner.

Substantially all of the coil C is located in the magnetic air gap between the head 5 of the core 2, and the annular magnetic keeper 7. Hence, when a varying electric current is sent through the coil C from the radio receiving set or the like, a maximum variation in magnetic effect is secured. It is to be understood that the actuating coil C is not directly connected to the output of the radio receiving set, but is connected thereto by an intermediate output transformer or any other suitable device for suppressing the direct current component of the output current from the radio receiving set. Hence, only an alternating current of varying audio frequency is fed to the coil C, and this will cause the diaphragm to vibrate in accordance with the sound signal to which the audio current corresponds.

While Fig. 1 shows that the height of the coil C is slightly greater than the height of the air gap between the keeper 7 and the head 5, we prefer to have the height of the coil C and the height of the air gap substantially the same. Hence, when the diaphragm and the coil C vibrates, the variations in the back electro-motive force thus generated will be substantially the same because the coil C is fully and wholly suspended within the fixed magnetic field as much as possible.

As shown more particularly in Fig. 7, the diaphragm 22 is connected by the tapered flange thereof to an annular member T made preferably of a suitable fabric such as tracing cloth or the like. As shown in Fig. 7 the inner edge of the tracing cloth member has serrated edges 21 by means of which the parts can be arranged in the position shown in Fig. 1. The member T can be made of any material which is easily bendable and which has little or no inherent resilience, so that the diaphragm 22 is permitted to move in a piston-like manner.

The serrations of the mount T can be connected to the tapered flange of the diaphragm, in any suitable manner, as by means of a suitable adhesive. The use of a strong linen cloth, such as tracing cloth, is desirable because said cloth is sufficiently inextensible to enable the coil C to be suitably centered, in the very narrow air gap in which it is located. Likewise, the use of an impregnated cloth, such as tracing cloth, which can be impregnated with any suitable wax, lacquer or the like, is desirable because a suitably impregnated cloth can be caused to rapidly bend without producing a disagreeable disturbing noise. Diaphragms of this type have been heretofore made of very thin metal, such a duralumin, about .002 of an inch thick and having integral edge portions which were directly clamped into position. The purpose of this was to produce a diaphragm which was so light, that its natural period of vibration was above the audible limit. By forming the mount from a strong linen cloth, suitably impregnated, the same effect is produced, because the natural period of vibration of the diaphragm remains above the audible limit. This causes the diaphragm to uniformly reproduce and amplify the tones throughout the audible range. Likewise, a strong linen fabric is sufficiently inextensible to prevent the diaphragm from striking the adjacent face of the head 5, or the adjacent tapered wall of the member 9.

As shown more particularly in Fig. 12, the diaphragm mount T is clamped between a countersunk gasket 15 mounted in the cover member 9 of the device, and a second gasket 16. Said gaskets 15 and 16 are made of any suitable soft material such as paper, leather, or the like and they are clamped to a metal gasket 17 made of brass or the like,

by means of screws 12 which enter the magnetic keeper 7. The member 9 which carries the binding posts B is made of non-magnetic material. Likewise, the cap 10 which is connected to the cover member 9 is also made of non-magnetic material, screws 11 being used for connecting the member 10 to the member 9. The outlet cap 10 is provided with an externally threaded throat 18.

The ends of the actuating coil C are respectively connected to the binding posts B. As shown in Fig. 8, sheets of insulating material 26 may be utilized for preventing contact between the ends of the coil C (from which the insulation has been removed) and the adjacent parts of the structure.

In the embodiment shown in Fig. 11 the movement of the diaphragm 22 produces air waves which are directly emitted and pass through the throat 18.

However, in the device shown in Fig. 1 a deflector 30 is used. This deflector 30 has a bottom portion corresponding in shape and dimensions to the central cup-shaped portion of the diaphragm 22 and it is provided with a top conical portion which conforms generally (although with a greater taper) to the adjacent part of the throat 18. As shown in Fig. 4, the tone clarifier 30 is provided with four radial arms 31 which are preferably integral with the cover member 9.

By the use of the deflector or filter 30 the sound waves which are emitted from the entire diaphragm 22 are deflected laterally so that an annular wave form is sent to the throat 18. The use of the said member 30 eliminates resonance effects which would occur within the throat 18 due to the reflection of the sound waves back from the inner wall of the throat 18 to the vibrating diaphragm. The shape of the diaphragm 22 may be varied. For example, in the embodiment shown herein the inner cup-shaped portion thereof has a general parabolic contour. However, this portion could be conical or could have any other suitable concave form. The bottom of the deflector 30 should correspond generally in contour to the contour of the concave portion of diaphragm 22.

The deflector 30 has a conical point 30′.

The operation of our device is as follows:

The field coil 4 is caused to produce a very large flux, which substantially saturates its magnetic circuit. A permanent field magnet may be employed, but the use of an electromagnet is preferable. The alternating audio current fed to the coil C causes the diaphragm 22 to freely vibrate, because the mount T has a very slight yield although it is tightly clamped into position as shown in Fig. 1, so that the vibration of the diaphragm need only overcome the very slight bending resistance of the flexible mount T. Since the coil C is directly mounted on a depending portion of the diaphragm, the construction is very compact and efficient. The sound waves are emitted to any suitable horn (not shown in the drawings). Although the diaphragm 22 is very thin and light, it has sufficient rigidity to vibrate as a unit, so that there are little or no relative vibrations between the parts thereof.

In order to make a satisfactory diaphragm for an electro-dynamic unit of the horn type, the diaphragm must be stamped from very thin metal because the quality of the tone reproduction depends upon the thinness of the diaphragm. Unless the diaphragm is very thin, it has a natural period of vibration within the audible range, so that it will tend to emphasize the tones whose pitch corresponds to said period. Experience has shown that when a metal diaphragm is stamped from thin sheet material that the central portion of the diaphragm assumes the desired shape, but that the edge portion of the diaphragm often has minute wrinkles or corrugations which makes it impossible to utilize it. According to our invention the edge portion of the diaphragm, in which such minute corrugations are likely to occur, is not utilized for connecting the diaphragm to the mount or support therefor. On the contrary, the mount or support T is connected to an intermediate portion of the stamped diaphragm 22 which is ordinarily smooth. If any corrugations are formed in the edge portion of the stamped diaphragm 22, these do not affect its utility because the actuating coil C is wound upon this portion of the diaphragm. As shown in Fig. 1, the diaphragm 22 is close to the member 30 and the adjacent walls of the member 9. Hence, it directly acts upon a very small air column. The air waves thus directly produced are transmitted to an air column of increasing effective cross-section, due to the conical shape of the part 30′.

We have showed preferred embodiments of our invention, but it is clear that numerous changes and omissions could be made without departing from its spirit.

We claim:

1. A loud speaker driving unit comprising a magnet having an annular air gap, a diaphragm mount axially spaced from said air gap, a diaphragm made of non-magnetic material connected to said mount and also axially spaced from said air gap, said mount being more flexible than said diaphragm, the said diaphragm having an axially extending portion located within said air gap, and a coil mounted upon said portion within said air gap, said mount being sufficiently inextensible to prevent the period of free vibration of said diaphragm being within the ordinary audible range.

2. For use within a loud speaker driving unit, a magnet, a diaphragm made of non-magnetic material associated with said magnet, and a mount for said diaphragm adapted to permit a limited axial movement thereof, said diaphragm being sufficiently rigid to prevent any substantial relative vibration of the various parts thereof during said limited axial movement, said mount being made of non-metallic material which is sufficiently inextensible to prevent the period of free vibration of said diaphragm being within the audible range.

3. A driving unit for loud speakers comprising a magnet, a diaphragm made of non-magnetic material, an actuating coil for said diaphragm adapted to permit a limited piston-like movement thereof, the said diaphragm being sufficiently rigid to prevent any substantial relative vibration of the various parts thereof during said limited piston-like movement, said mount being made of non-metallic material which is sufficiently inextensible to prevent the period of free vibration of said diaphragm being within the ordinary audible range.

4. An electro-dynamic driving unit comprising a casing made of permeable material having a core made of permeable material, a coil located within said casing adapted to send a flux through the said casing and core, said core having a head and said casing having an annular top member made of permeable material so that an annular air gap for the magnetic flux is formed between said annular member and the head of the core, a second top member connected to said annular top member, a sheet of flexible material clamped to said annular top member, a diaphragm made of non-magnetic material and connected to said sheet of flexible material, and a throat member located above said diaphragm.

In testimony whereof we affix our signatures.

ALEXANDER I. ABRAHAMS.
EDWARD J. JONSSENS.