July 24, 1956 G. G. HARVEY ET AL 2,756,421

BEACON ANTENNA

Filed Jan. 5, 1946

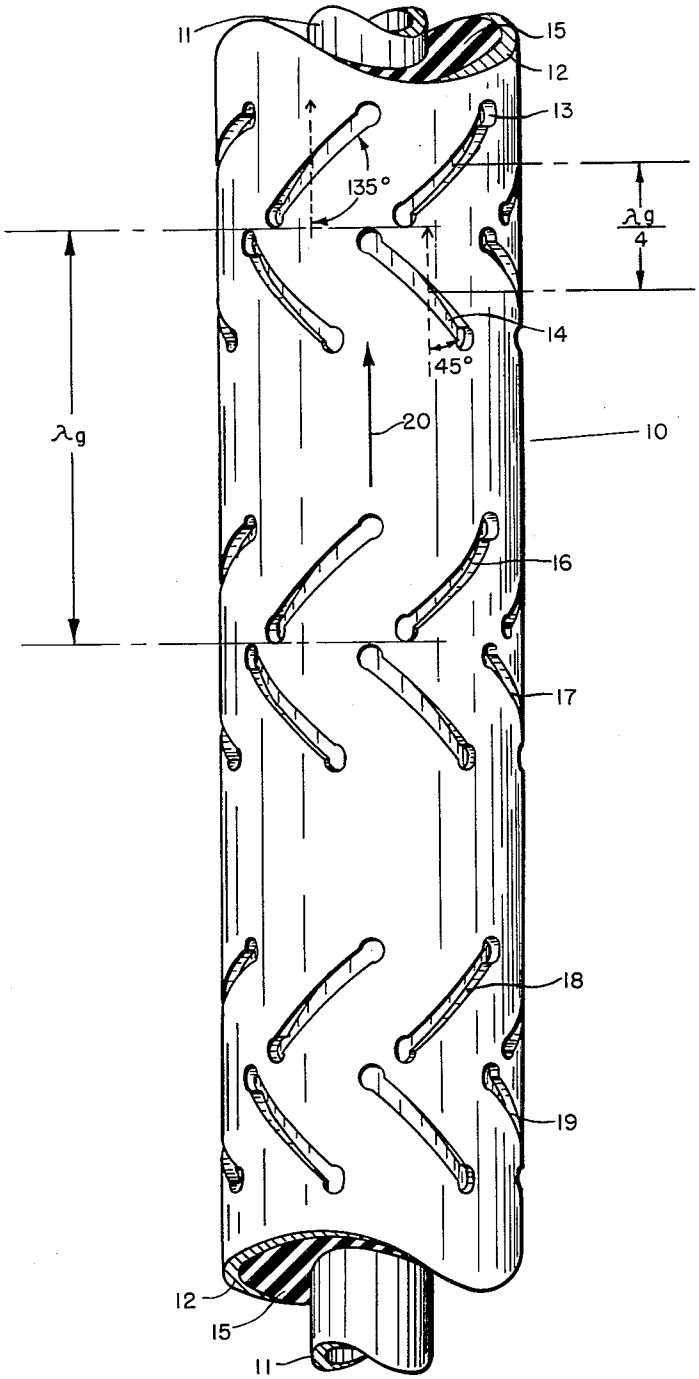

INVENTORS
GEORGE G. HARVEY
LOUISE BUCHWALTER

BY

ATTORNEY

United States Patent Office 2,756,421 Patented July 24, 1956

2,756,421

BEACON ANTENNA

George G. Harvey, Boston, Mass., and Louise Buchwalter, Winnetka, Ill., assignors, by mesne assignments, to the United States of America as represented by the Secretary of the Navy

Application January 5, 1946, Serial No. 639,279

7 Claims. (Cl. 343—770)

This invention relates in general to antennas and particularly to an antenna for radiating circularly polarized energy in a pancake beam pattern.

In the radio beacon art circular polarization is desirable in order to facilitate the reception of transmitted energy by an antenna having any polarization. Also, energy polarized in one plane only may be absorbed by obstructions in the air or on the surface of the earth and thereby produce blind spots in the region about the antenna. Circularly polarized energy will be less apt to have such blind spots. Further, circularly polarized energy may be received by a polarized antenna regardless of its orientation. It is further desired that the radiation pattern of beacon antennas have non-directional characteristics in a horizontal plane and relatively narrow angle characteristics in a vertical plane; this pattern is hereinafter referred to as a pancake beam pattern.

An object of this invention is to provide an antenna that will radiate circularly polarized electromagnetic energy.

Another object of this invention is to provide an antenna that will collect electromagnetic energy radiated from an antenna of any polarization.

A further object of this invention is to provide an antenna that will produce a pancake beam pattern.

A still further object of this invention is to provide an antenna that will be simple and inexpensive to construct, light in weight and small in size, and easy to install, adjust and maintain.

Other and further objects will become apparent upon a careful consideration of the following specification when taken in consideration with the accompanying drawing, the sole figure of which shows a portion of an antenna constructed in accordance with this invention.

Referring more specifically to the drawing, a portion of a coaxial line **10** adapted to conduct a longitudinally traveling wave of electromagnetic energy in a direction **20** is shown having an inner conductor **11** and an outer conductor **12**, said conductors being separated by polystyrene or other suitable dielectric **15**. Elongated slots of similar length, enlarged at the ends for ease of manufacture and to increase their electrical length, are cut in the outer conductor **12**. Certain ones of said aforementioned slots are arranged in a first group of first and second adjacent rows of slots **13** and **14**, each row consisting of, for example, seven slots substantially evenly and circumferentially spaced about the outer conductor **12** in respective planes transverse to the direction of the longitudinally traveling wave. The first row of slots **13** is longitudinally spaced from the second row of slots **14** by a distance between slot centers substantially equal to one-quarter of the wavelength

$$\frac{\lambda g}{4}$$

of energy in the coaxial line **10**. The slots **13** of said first row and the slots **14** of said second row are disposed substantially at an angle of 45° and 135° respectively

to the direction **20** of the longitudinally traveling wave of the coaxial line **10**, thus the slots **13** of said first row are substantially mutually perpendicular to the slots **14** of said second row. Additional similar groups of two adjacent rows of slots, such as **16, 17**, and **18, 19**, may be arranged longitudinally along the outer conductor **12** at a distance between corresponding elements of said groups substantially equal to one wavelength, λg, of energy in the coaxial line **10**, to form an antenna in accordance with the invention. For example, an antenna having twelve such groups in which each row has seven slots has been found to provide a satisfactory pancake beam pattern for beacon use.

In operation the coaxial line **10** is usually vertically mounted and fed with a longitudinally traveling wave of electromagnetic energy by conventional means. The rows of slots **13** and **14** are mutually perpendicular and, as they are spaced longitudinally along the outer conductor **12** a distance between slot centers equal to one-quarter wavelength,

$$\frac{\lambda g}{4}$$

are excited out of phase an electrical 90° by energy in the coaxial line **10**. As is well known in the art, when two radiating elements are physically disposed at an angle of 90° and electromagnetically energized out of phase an electrical 90°, circularly polarized radiation is obtained.

Additional groups of two adjacent rows of slots, such as **16, 17** and **18, 19**, being spaced one wavelength apart longitudinally along the line **10**, will all radiate circularly polarized energy in phase with one another. As the length of the wave in the line **10** is approximately equal to or slightly less than the length of the wave in free space, radiation from the vertically disposed groups will combine to provide a very narrow radiation pattern in the vertical plane, while the pattern in a horizontal plane is essentially non-directional. As defined herein, this is a pancake beam pattern.

Although this invention has been shown and described in a specific antenna using a dielectric filled coaxial line producing a pancake pattern beam of circularly polarized energy, it is obvious that this invention may be modified in many ways, for example, by the use of hollow wave guide. It may be further modified to produce other radiation array patterns. Therefore, it is understood that this invention is not to be limited except as required by the prior art and the spirit of the appended claims.

What is claimed is:

1. An antenna for producing circularly polarized radiation comprising, a transmission line having an outer wall of suitable dimensions for conducting a traveling wave of electromagnetic energy longitudinally along said outer wall, and at least one pair of elongated slots cut in said outer wall, the first and second slots of said pair of slots being at an angle of substantially 45° and 135° respectively to said traveling wave and spaced longitudinally between slot centers a distance substantially equal to one quarter wave length of energy in said line.

2. An antenna for producing circularly polarized radiation comprising, a transmission line having an outer wall of suitable dimensions for conducting a traveling wave of electromagnetic energy longitudinally along said outer wall, and a plurality of elongated slots cut in said outer wall in first and second rows of slots substantially evenly spaced about said outer wall in respective planes transverse to the direction of said longitudinally traveling wave, said slots of said first row and said slots of said second row being disposed at angles of substantially 45° and 135° respectively to said longitudinally traveling

wave and separated longitudinally a distance of one quarter wavelength between slot centers.

3. An antenna comprising, a transmission line having an outer wall of suitable dimensions for conducting a traveling wave of electromagnetic energy longitudinally along said outer wall, and a plurality of elongated slots cut in said outer wall in groups of first and second adjacent rows of slots substantially evenly spaced about said outer wall in respective planes transverse to the direction of said longitudinally traveling wave, said slots of said first row and said slots of said second row being disposed at angles of substantially 45° and 135° respectively to said direction of said longitudinally traveling wave and separated longitudinally a distance between slot centers of substantially one-quarter wavelength of energy in said line, a plurality of said groups of said first and second adjacent rows of slots being arranged longitudinally along said outer wall with the distance between corresponding elements in adjacent groups being substantially equal to or less than the length of said wave in free space, said groups of slots being adapted to radiate in phase with each other, whereby the energy radiated will be circularly polarized in a radiation pattern having non-directional characteristics in said transverse plane and a narrow angle characteristic in a longitudinal plane, the angle of said narrow angle characteristic being indirectly dependent upon the number of said groups of first and second adjacent rows of slots used.

4. An antenna comprising, a dielectric filled coaxial line of suitable dimensions for conducting a traveling wave of electromagnetic energy longitudinally along the outer wall of said coaxial line, and a plurality of elongated slots cut in said outer wall in groups of first and second adjacent rows substantially evenly and circumferentially spaced about said outer wall in respective planes transverse to the direction of said longitudinally traveling waves, said slots of said first row and said slots of said second row being disposed at angles of substantially 45° and 135° respectively to said direction of said longitudinally traveling wave and separated a distance between slot centers of substantially one-quarter wavelength of energy in said line, a plurality of said groups of said first and second adjacent rows of slots being arranged longitudinally along said outer wall with the distance between corresponding elements in adjacent groups being substantially one wavelength of energy in said line, whereby the energy radiated will be circularly polarized in a radiation pattern having non-directional characteristics in said transverse plane and a narrow angle characteristic in a longitudinal plane, the angle of said narrow angle characteristic being indirectly dependent upon the number of said groups of first and second adjacent rows of slots used.

5. An antenna comprising, a transmission line having an outer wall formed with a plurality of rows of slots, adjacent rows being disposed at angles of 45° and 135°, respectively, with the longitudinal axis of said line, the distance between centers of corresponding slots in adjacent rows being one-quarter wavelength and between centers of corresponding slots in alternate rows being one wavelength of the transmitted energy.

6. An antenna comprising a transmission line having an outer wall formed with a first row of slots each disposed at a 45° angle with the longitudinal axis of said transmission line and a second row of slots each disposed at a 135° angle with the longitudinal axis of said transmission line, the distance between centers of a slot in said first row and a corresponding slot in said second row being one-quarter the wavelength of the energy transmitted by said line.

7. Apparatus as in claim 6 wherein said slots in each row are seven in number and are substantially evenly and circumferentially spaced about said line.

References Cited in the file of this patent

UNITED STATES PATENTS

2,129,719	Southworth	Sept. 13, 1938
2,414,266	Lindenblad	Jan. 14, 1947
2,438,735	Alexanderson	Mar. 30, 1948
2,455,158	Bradley	Nov. 30, 1948
2,455,224	Buchwalter et al.	Nov. 30, 1948
2,573,746	Watson	Nov. 6, 1951
2,635,188	Riblet	Apr. 14, 1953
2,679,590	Riblet	May 25, 1954

FOREIGN PATENTS

510,763	Great Britain	Aug. 8, 1939