US 20020145561A1

(19) United States

(12) Patent Application Publication (10) Pub. No.: US 2002/0145561 A1

Sandhu et al. (43) Pub. Date: Oct. 10, 2002

(54) METHOD AND SYSTEM FOR A PLURALITY OF MOBILE UNITS TO LOCATE ONE ANOTHER

(76) Inventors: **Kulbir S. Sandhu**, Fremont, CA (US); **Roderic C. Fan**, Fremont, CA (US); **David Mleczko**, San Jose, CA (US); **Kenny Nguyen**, Mountain View, CA (US); **Carey Fan**, Fremont, CA (US)

Correspondence Address:
SKJERVEN MORRILL LLP
25 METRO DRIVE
SUITE 700
SAN JOSE, CA 95110 (US)

(21) Appl. No.: **09/829,645**

(22) Filed: **Apr. 9, 2001**

Publication Classification

(51) **Int. Cl.**[7] **G01S 5/14**

(52) **U.S. Cl.** **342/357.09**

(57) **ABSTRACT**

A method and system whereby two mobile units can locate each other is presented. A user connects an interface device, such as a personal digital assistance (PDA), a wireless phone, a laptop, or a pager, to a mobile unit. The mobile unit regularly obtains its location through a location-determining technology (e.g., GPS) and sends the location to a service provider computer. The service provider computer maintains a database of the current location of all the mobile units, and provides the location of mobile units to each of the mobile units. The mobile unit communicates with the service provider wirelessly through a communication network and a data network, for example the Internet.

A user of the mobile unit can send messages to other users with a location stamp, which indicates the location of the message sender's mobile unit. In addition, a user can send a request to be notified when a target mobile unit reaches a reference point. The reference point may be defined relative to the location of the requester. Alternatively, the reference point may be an address or a landmark. Upon receiving the request, the service provider computer tracks the distance between the target mobile unit and the reference point, and sends a notification to the requester when the target mobile unit reaches the reference point.

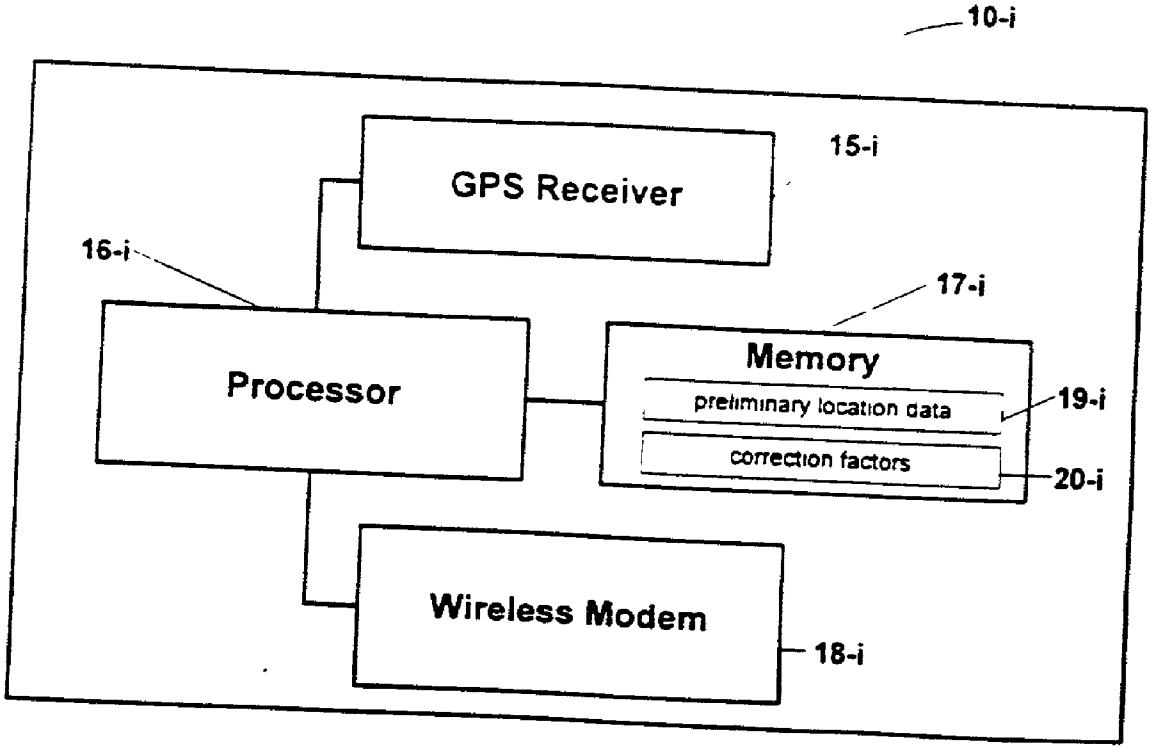

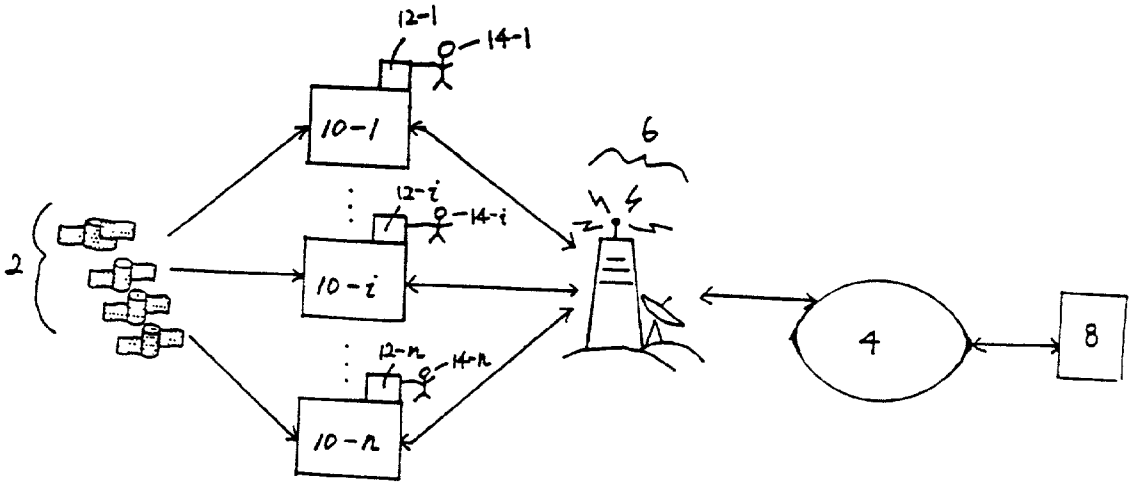
12-1
14-1
10-1
6
12-i
14-i
2
10-i
12-n
14-n
10-n
4
8

FIG. 1

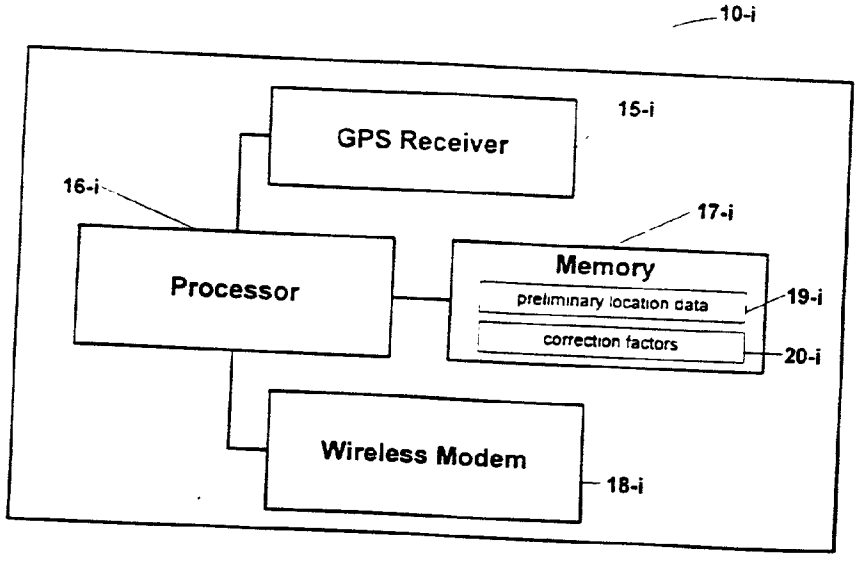
10-i
15-i
GPS Receiver
16-i
17-i
Processor
Memory
preliminary location data
19-i
correction factors
20-i
Wireless Modem
18-i

FIG. 2

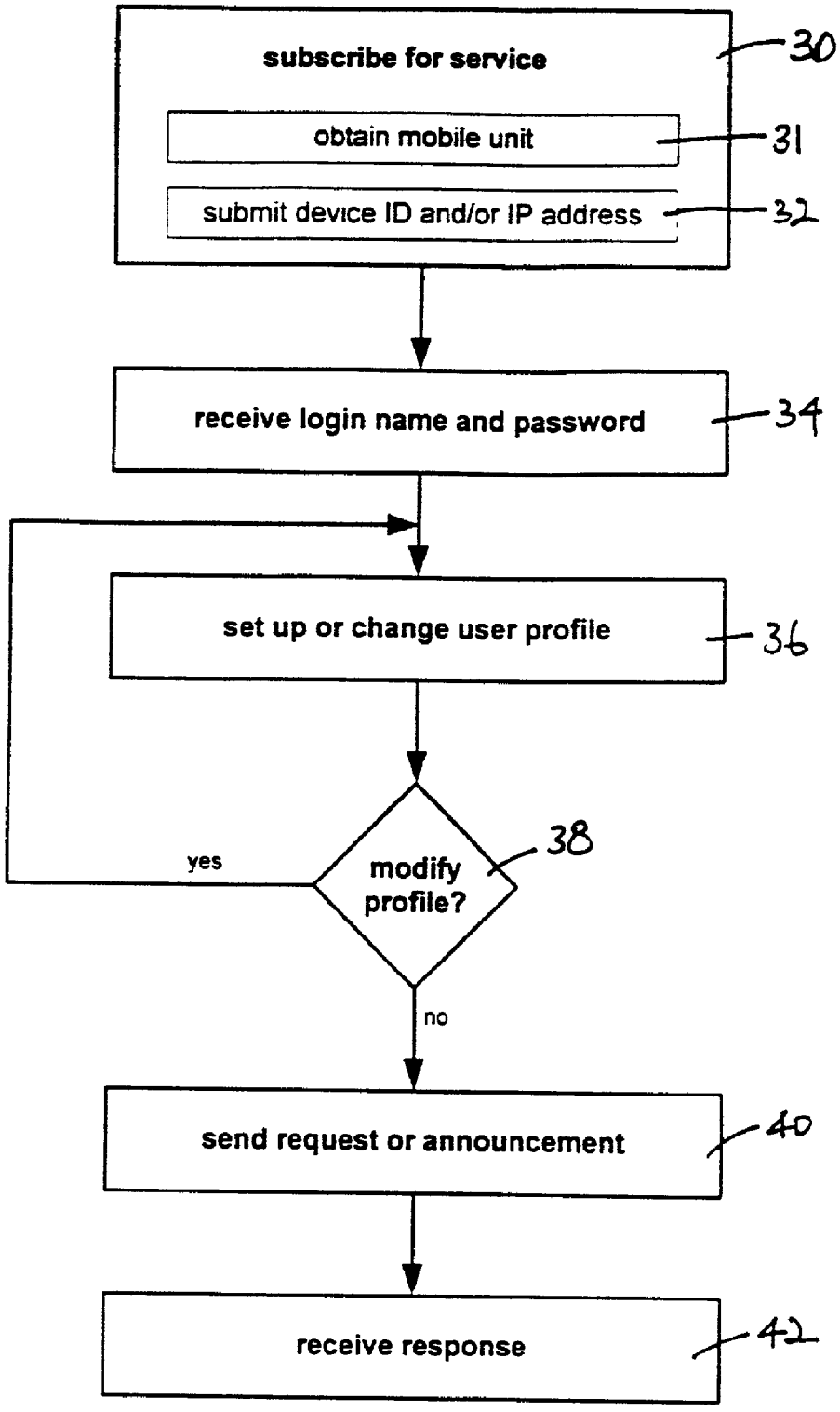
subscribe for service
30
obtain mobile unit
31
submit device ID and/or IP address
32
receive login name and password
34
set up or change user profile
36
modify profile?
38
yes
no
send request or announcement
40
receive response
42

FIG. 3

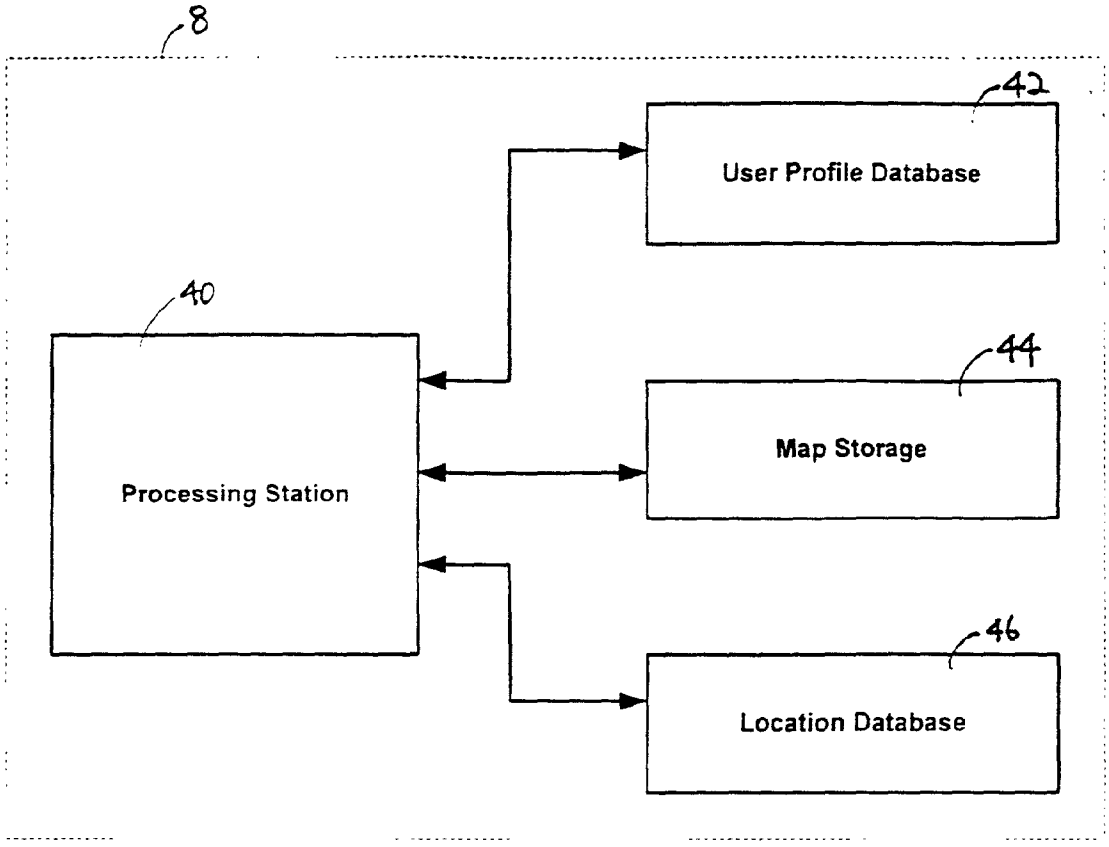
8
42
User Profile Database
40
Processing Station
44
Map Storage
46
Location Database

FIG. 4

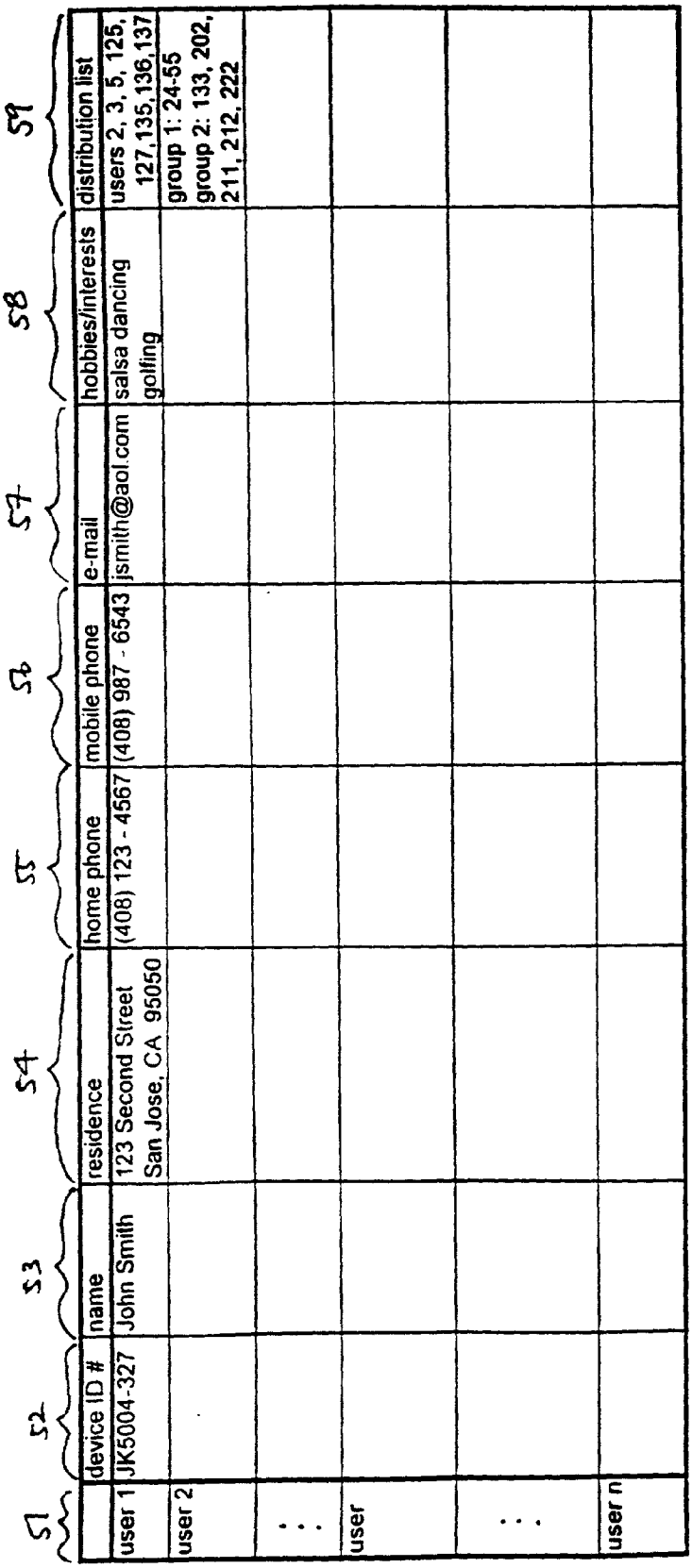

	device ID #	name	residence	home phone	mobile phone	e-mail	hobbies/interests	distribution list
user 1	JK5004-327	John Smith	123 Second Street San Jose, CA 95050	(408) 123 - 4567	(408) 987 - 6543	jsmith@aol.com	salsa dancing golfing	users 2, 3, 5, 125, 127,135,136,137
user 2								group 1: 24-55 group 2: 133, 202, 211, 212, 222
. . .								
user								
. . .								
user n								

FIG. 5

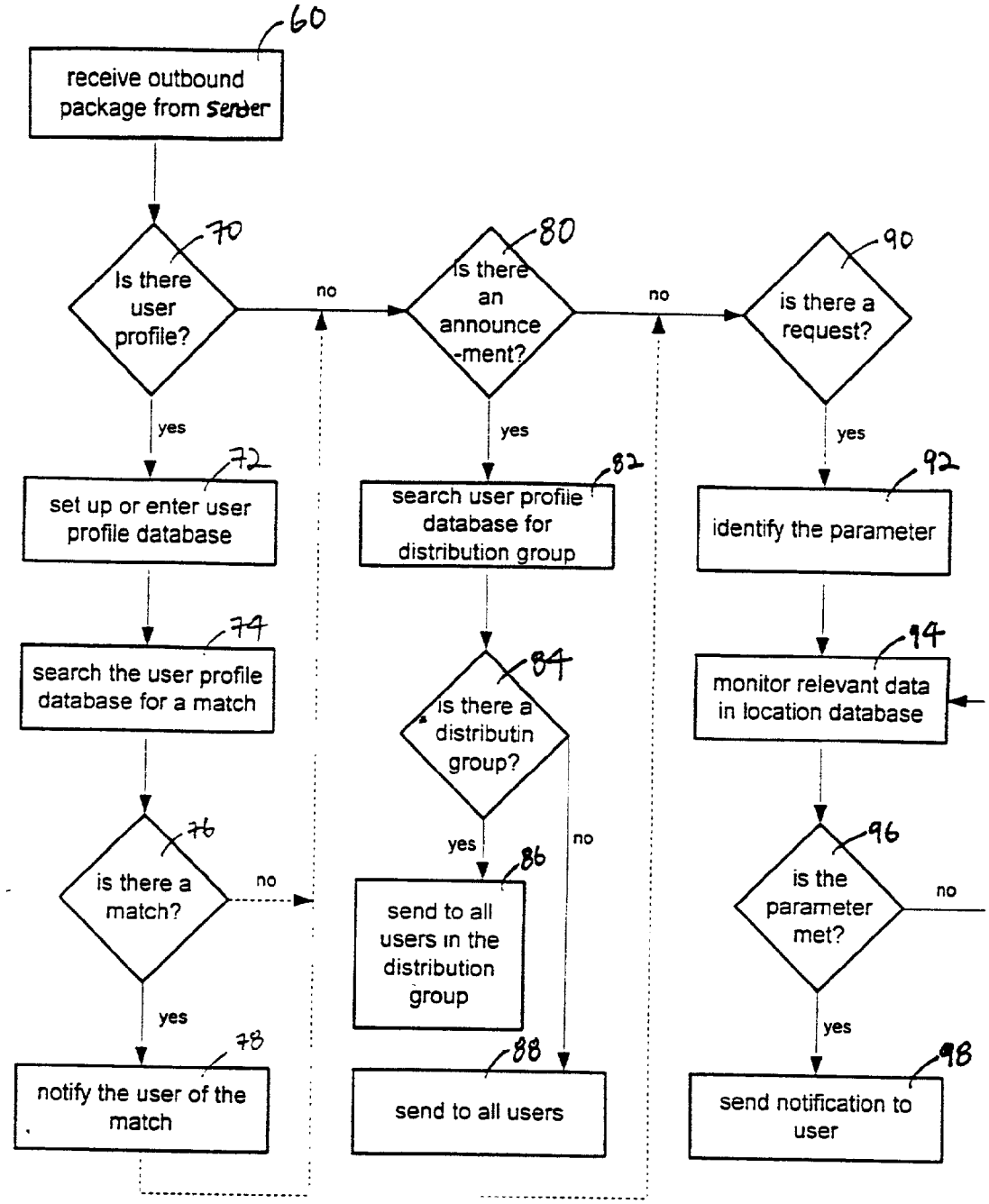
60
receive outbound package from sender
70
Is there user profile?
no
80
Is there an announce-ment?
no
90
is there a request?
yes
yes
yes
72
set up or enter user profile database
82
search user profile database for distribution group
92
identify the parameter
74
search the user profile database for a match
84
is there a distributin group?
94
monitor relevant data in location database
76
is there a match?
no
yes
no
86
send to all users in the distribution group
96
is the parameter met?
no
yes
yes
78
notify the user of the match
88
send to all users
98
send notification to user

FIG. 6

METHOD AND SYSTEM FOR A PLURALITY OF MOBILE UNITS TO LOCATE ONE ANOTHER

BACKGROUND

[0001] 1. Field of the Invention

[0002] The invention relates to a system and a method for distributing positional information and location specific messages to mobile units by using a data network.

[0003] 2. Description of the Related Art

[0004] Global positioning system ("GPS") is used for obtaining position information. The GPS includes a plurality of satellites orbiting the earth and sending out, at precisely synchronized times, a code sequence that identifies the satellite. Specifically, the code sequence transmitted by each satellite is a precisely timed binary pulse train. In addition to the code sequence, these satellites send out positioning information that can be used to calculate vehicle positions. A GPS receiver retrieves the positioning information from the GPS satellites and triangulates the information to obtain the position of the receiver. A more detailed discussion of a GPS receiver is found in U.S. Pat. No. 5,990,827 to Rodric C. Fan, et al. entitled "Structure of a Position Processing Apparatus," which is herein incorporated in its entirety.

[0005] One application of GPS is vehicle location. A conventional vehicle locating system typically includes one or more ground stations and a plurality of mobile units that may be installed in vehicles. Each mobile unit is equipped with a GPS receiver and a wireless transmitter. Using the GPS receiver, a mobile unit determines the position of the vehicle in which it is installed and transmits the position to a ground station. The ground station of a conventional vehicle locating system normally includes a map database search system and some type of storage medium that stores digital maps and travel-related information. Thus, upon receiving the vehicle positions from the mobile units, the ground station combines the stored data with the received information and displays the present vehicle positions on a digital map.

[0006] In some cases, a data network, such as the Internet, is involved in locating mobile units. When a data network is involved, the mobile units determine the vehicle positions and transmit the position information to the network server. This data transmission from a mobile unit to the network server is accomplished wirelessly by, for example, cellular digital packet data network (CDPD) that connects to a data network (e.g., the Internet), which in turn provides access to the network server. In some cases, the mobile units may transmit raw data to the network server so that the network server can make the position determination. In a system that involves a network server, the data storage medium may be accessed by the network server instead of the ground station. The data storage medium contains travel-related information such as maps, traffic conditions, positions of service stations, and destinations of interest. Thus, the data processing unit organizes the measured position and generates an area map. The area map indicates by a position marker the position of each mobile unit.

[0007] As mentioned above, vehicles can connect to data networks (e.g., the Internet) wirelessly through communication networks, for example a CDPD network. CDPD networks consist of Mobile Data Intermediate Systems (MDISs), Mobile Data Base Stations (MDBSs), and Mobile End Stations (MESs). An MDBS offering CDPD services helps a roaming MES register with the MDIS with which the particular MDBS is associated by acting as a conduit for the registration message. An MDIS that handles the registration is referred to as the serving MDIS. Upon receiving the registration message from the MDBS, the serving MDIS informs the home MDIS of the MES of the latter's presence in its coverage area. When a host needs to send data to an MES, it does not have to be aware of the mobility aspect of the MES; it simply transmits data using the MES's IP address as the destination address. The encapsulated data packets for the MES are forwarded to the serving MDIS of the MES. At the serving MDIS, packets are decapsulated to reveal the MES's address. The serving MDIS sends the original data packets to the right channel where the MES is currently located. The MES receives the data packets. If the MES needs to reply, it directly sends data packets using the remote host's IP address as the destination address. CDPD systems are further described in K. Budka et al., "Cellular Digital Packet Data Networks," Bell Labs Technical Journal, Vol. 2, No. 3 (Summer 1997); "Cellular Digital Packet Data Systems Specification: Relases 1.1," CDPD Forum, Inc., Chicago (1995); and M. S. Taylor et al., "Internet Mobility: The CDPD Approach," Prentice Hall PTR, Upper Saddle River, N.J. (1996).

[0008] The vehicle locating system described above, while useful for tracking the fleet of a trucking company or a moving company, is limited in that the positions of the vehicles can only be obtained from a ground station. A member of the fleet cannot use the above vehicle locating system to obtain vehicle position information of other fleet members. A method and system that allows one member of the fleet to obtain vehicle position information of other members of the fleet from a place other than the ground station is needed.

SUMMARY OF THE INVENTION

[0009] The present invention includes a system and a method for a mobile user to obtain the location of another mobile user. A mobile unit tracks its own location through a location-determining technology, for example GPS, time difference of arrival (TDOA), or angle of arrival (AOA). In addition, the mobile unit receives input from users. The mobile unit encapsulates the location data and the user input in an outbound package, and transmits the outbound package to a service provider via a communication network and a data network (e.g., the Internet). The service provider is a computer that maintains a database of the current location of all the mobile units registered with the service provider. The database can be accessed by any of the mobile units registered with the service provider.

[0010] Upon receiving the outbound package from a mobile unit, the service provider categorizes the content of the outbound package into user profile data, announcements, and requests. User profile data includes personal information that is not location-specific, such as name, e-mail address, telephone number, and hobbies of a user. The service provider uses the user profile data to either set up a new account in the database or to modify a pre-existing piece of information in the database. Optionally, the service provider searches the database for a matching entry, and provides the user with a list of other users who have a similar user profile.

If the outbound package contains an announcement, the service provider forwards the announcement to the proper recipients indicated in the outbound package, with a location stamp indicating the location of the sender mobile unit. The outbound package may contain a request, either in addition to or instead of an announcement. A request may be a request for the location of another user, or a request to be notified if a geographical parameter is met. In response to the former type of request, the service provider sends back a response package containing the current location of the specified user. In response to the latter type of request, the service provider monitors the location of the relevant mobile unit(s) until either the parameter is met or the user sends another outbound package telling the service provider to stop the monitoring. When the parameter is met, the service provider sends a notification to the requester mobile unit in the form of a response package. Depending on the user interface device, the notification may include sound, text, flashing lights, or graphics.

BRIEF DESCRIPTION OF THE DRAWINGS

[0011] **FIG. 1** depicts a location-specific peer-to-peer communication system in accordance with the present invention.

[0012] **FIG. 2** depicts the components of a mobile unit that provides the location data in accordance with the present invention.

[0013] **FIG. 3** depicts a flowchart of the registration process through which a user becomes a part of the communication system in accordance with the present invention.

[0014] **FIG. 4** depicts the components of a service provider computer in accordance with the present invention.

[0015] **FIG. 5** depicts an exemplary table of user profiles that maintains personal information of all users of the system.

[0016] **FIG. 6** depicts a flowchart of the response-package creation process executed by the service provider computer in response to an outbound package from a user.

DETAILED DESCRIPTION OF THE INVENTION

[0017] **FIG. 1** provides an overview of the location-specific peer-to-peer communication system in accordance with the present invention. The system includes GPS satellites **2**, data network **4**, server **6**, communication network **6**, service provider **8**, and mobile units **10-1** through **10-*n*** where n is the total number of mobile units in the system. Mobile units **10-1** through **10-*n*** are connected to user interface device **12-1** through **12-*n***, respectively. Users **14-1** through **14-*n*** transmit information to and receive information from mobile units **10-1** through **10-*n*** through user interface device **12-1** through **12-*n***, respectively.

[0018] As used herein, mobile unit **10-*i*** refers to one mobile unit of mobile units **10-1** through **10-*n*** and user interface device **12-*i*** refers to the user interface device that is connected to mobile unit **10-*i***. Mobile units **10-1** through **10-*n*** receive code sequences from GPS satellites **2** and convert the code sequences to location data. In addition, mobile units **10-1** through **10-*n*** receive information from users **14-1** through **14-*n***, respectively. User **14-*i*** enters announcements and requests into mobile unit **10-*i*** through user interface device **12-*i***, which then combines the received announcements and requests with location data into an outbound package. In some embodiments, for example if user interface device **12-*i*** is a laptop or a personal digital assistant that allows Internet access, user **14-*i*** may be able to enter user profile data through user interface device **12-*i*** as well. Mobile unit **10-*i*** transmits the outbound package to communication network **6**. Outbound package, as used herein, refers to information that originates in user interface device **12-*i*** and travels through communication network **6** and data network **4** to reach service provider **8**. Information that originates in service provider **8** and travels to mobile unit **10-*i*** is referred to as a response package. Mobile unit **10-*i*** receives a response package, reformats it for user interface device **12-*i***, and passes it to user interface device **12-*i***. Communication network **6** includes but is not limited to CDPD, GSM, iDEN, AMPS, or CDMA. Data network **4** is a communication network that can also store and maintain data, such as the Internet.

[0019] User **14-*i*** enters announcements and requests into mobile unit **10-*i*** through user interface device **12-*i***, and also retrieves any information encapsulated in the response package through user interface devices **12-*i***. User interface device **12-1** through **12-*n*** include but is not limited to wireless telephone, laptop, personal digital assistant, and pager. Thus, after retrieving information from mobile unit **10-*i***, user **14-*i*** may contact another user, e.g. user **14-*n***, directly without using data network **4**. For example, if user interface device **14** is a wireless phone, user **14-*i*** may call user **14-*n***. Alternatively, if user interface device **14** is a laptop, user **14-*i*** may communicate with user **14-*n*** by e-mail or instant messaging.

[0020] **FIG. 2** shows the components of mobile unit **10-*i***. Mobile unit **10-*i*** is a portable unit that can be used independently, installed in a vehicle or a cellular phone, or clipped onto a watch or a belt. As shown in **FIG. 2**, mobile unit **10-*i*** includes GPS receiver **15-*i***, processor **16-*i***, memory **17-*i***, and wireless modem **18-*i***. GPS receiver **15-*i*** tunes into the frequency at which GPS satellites **2** transmit information, and receives GPS code sequences. GPS receiver **15-*i*** forwards the GPS code sequences to processor **16-*i***, which converts the GPS code sequences to location data. Processor **16-*i*** uses triangulation to convert the GPS code sequences to preliminary location data by first converting the GPS code sequences, and then applying the correction factors to obtain location data such as a street address or latitude, longitude, and altitude. Memory **17-*i*** includes preliminary location data **19-*i*** and correction factor **20-*i***.

[0021] The location data derived from GPS code sequences are stored in memory **17-*i***. If further calculation is necessary to convert the location data (e.g., latitude, longitude, and maybe altitude) into street address, processor **16-*i*** executes the necessary calculation before storing the values in memory **17-*i***.

[0022] Processor **16-*i*** uses correction factors **20-*i***, e.g., delta-pseudo-ranges, to obtain the actual locations (and optionally velocities) of mobile units **10-1** through **10-*n***. The correction factors, which depend on the geographical zone in which mobile unit **10-*i*** is located, are obtained from remote correction stations (not shown). Processor **16-*i*** can connect

to the remote correction stations via wired or wireless communication links, or via a data network such as data network **4**. Using the correction factors received from the remote correction stations and the GPS code sequences, processor **16**-*i* of mobile unit **10**-*i* derives the street addresses and the velocities of mobile units **10-1** through **10**-*n*. The location data may be updated as frequently as mobile unit **10**-*i* receives the GPS code sequences, or at a designated interval such as every two seconds. Further details on the calculation of location data are provided in U.S. Pat. No. 5,959,577 to Rodric C. Fan, et. al. entitled "Method and Structure for Distribution of Travel Information Using Network," which is herein incorporated in its entirety. Processor **16**-*i* reformats the location data to an appropriate protocol, e.g., UDP/IP, combines the location data with the information entered by user **14**-*i*, and sends the outbound package to communication network **6** via wireless modem **18**-*i*. Processor **16**-*i* tracks the location of mobile unit **10**-*i* frequently (e.g., every few seconds) by receiving the GPS code sequence, deriving the location data, and sending the location data to service provider **8**. The frequent updating of the location data allows every outbound package to have a time stamp and a "location stamp" designating the location of mobile unit **10**-*i* at the time the outbound package was sent. Further details on location stamp is provided in U.S. patent application Ser. No. 09/696,446 to Carey B. Fan, et. al. entitled "Location Authentication Stamp Attached to Messages," which is incorporated herein in its entirety. A processor such as Motorola's MC68331 maybe used for processor **16**-*i*.

[**0023**] **FIG. 3** shows the initial registration process through which users **14-1** through **14**-*n* become a part of the system in accordance with the present invention. As indicated by block **30**, the registration process begins with the subscription process. Block **31** indicates that the subscription process includes physically obtaining mobile unit **10**-*i*, for example by purchasing. Block **32** indicates that the subscription process also includes submitting a unique device identification number and/or device IP address to service provider **8**. Depending on the embodiment, user **14**-*i* sends the unique device identification number and/or device IP address to service provider **8** by mail, telephone, computer, or user interface device **12**-*i*. Service provider **8** receives the device identification number and/or device IP address and assigns user **14**-*i* a login name and a password, as indicated by block **34**. As indicated by block **36**, user **14**-*i* uses the login name and the password to set up her user profile with service provider **8** through data network **4**. User profile includes personal information such as name, e-mail address, residential address, mobile phone number, and landline phone number. In addition, user profile may include hobbies and interests of user **14**-*i* and distribution groups. Distribution groups are further explained below. As shown by block **38**, user **14**-*i* can modify her user profile as she desires. Optionally, the user profile modification may allow user **14**-*i* to change her password.

[**0024**] User **14**-*i*, who registers with the system in accordance with the present invention, can access the location of all other users who are registered with the system. However, user **14**-*i* may wish to limit the data exchange to a sub-group of users, such as friends, coworkers, and family. User **14**-*i* can limit the data exchange to a sub-group of users by defining a distribution group in the user profile. A distribution group includes a list of users, and user **14**-*i* can create as many distribution groups as she wishes. For example, user **14**-*i* may create a first distribution group including all co-workers, a second distribution group including only the co-workers in his project team, and a third distribution including his Saturday night poker group. Then, if user **14**-*i* can direct a request or an announcement to one or more of the distribution groups. Similarly, user **14**-*i* can limit those who can access her current location to those in one or more distribution groups.

[**0025**] After user **14**-*i* registers with the system, all other users have access to the location of user **14**-*i*. In some embodiments, user **14**-*i* is provided with a "hide" option in the user profile such that if user **14**-*i* opts to "hide," users who normally have access the current location of user **14**-*i* is blocked from accessing the current location of user **14**-*i*. Some embodiments may allow user **14**-*i* to specify a list of users from whom she wants to "hide. If user **14**-*i* chooses to "hide" from users **14-2** through **14-5**, for example, service provider **8** does not provide users **14-2** through **14-5** with the location of user **14**-*i* even if users **14-2** through **14-5** request the location of user **14**-*i*. Instead of providing the location of user **14**-*i*, service provider **8** might send a message that the location of user **14**-*i* is unavailable.

[**0026**] After user **14**-*i* sets up a user profile in service provider **8**, user **14**-*i* can access the location data of other users by sending outbound packages, as indicated in block **40**, and receiving response packages, as indicated in block **42**. Block **40** indicates that user **14**-*i* can send a request or an announcement to service provider **8**. In the simplest case, a request can be a request for the current location of another user. Requests and announcements may be entered through user interface device **12**-*i* or directly to data network **4**, depending on the embodiment. A request can entail specifying a geographical parameter and asking service provider **8** to send a notification if the geographical parameter is met. The geographical parameter may be a pre-defined distance relative to user **14**-*i*. For example, user **14**-*i* may request to be notified if any user in one of his distribution groups comes within a ten-mile radius. Alternatively, the geographical parameter may be defined independently of the location of user **14**-*i*. For example, user **14**-*i* may request to be notified if user **14-2** crosses a specific zip code, passes a landmark, or arrives at a specific intersection or restaurant. In that case, service provider **8** sends user **14**-*i* a response package containing a notification when the condition is satisfied.

[**0027**] **FIG. 4** shows the components of service provider **8**. Service provider **8** may be a computer or a server linked to data network **4**. Service provider **8** includes processing station **40**, user profile database **42**, map storage **44**, and location database **46**. User profile database **42** stores the user profiles of all users **14-1** through **14**-*n*. If a user modifies his/her user profile, processing station **40** updates user profile database **42** accordingly. Map storage **44** stores maps of the geographical area covered by service provider **8**. Map storage **44** allows user **14**-*i* to see a map of the relevant area if desired. For example, if user **14**-*i* requests to be notified if user **14-2** is within a ten-mile radius, processing station **40** may provide user **14**-*i* with a map showing the location of user **14-2** relative to the location of user **14**-*i*. Location database **46** contains data that is more frequently updated than user profile data, such as the locations of mobile units **10-1** through **10**-*n*. As mentioned above, location data may

be updated as frequently as every two seconds. When users make requests, the geographical parameters may be stored in location database **46** as well. Similarly, when users make announcements, the content of the announcements may be stored in location database **46**.

[**0028**] User profile database **42**, map storage **44**, and location database **44** may be implemented using any mass storage media, such as hard disks, RAMs, ROMs, CD-ROMs, and magnetic tapes. Infrequently updated information, such as maps or user profile, may be stored on CD-ROMs. On the other hand, frequently updated information, such as location data, may be stored on RAM.

[**0029**] In some embodiments, user profile database **42** may store the user profiles in a table format. **FIG. 5** shows exemplary table **50** which may be used to store the user profiles in user profile database **42**. Table **50** stores personal information such as name, residential address, home telephone number, mobile telephone number, e-mail address, hobbies, and distribution lists, as shown by columns **53**, **54**, **55**, **56**, **57**, **58**, and **59**. The exemplary table **50** in **FIG. 5** indexes the information by user numbers, as shown in column **51**. Other embodiments may index the personal information by device identification number (column **53**) or by IP address (not shown). Location database **46** may be indexed similarly.

[**0030**] **FIG. 6** illustrates the functions of service provider **8**. Upon receiving an outbound package (block **60**) from a sender, processing station **40** sorts the data encapsulated in the outbound package into user profile, announcements, and requests, as indicated in blocks **70**, **80**, and **90**. If the outbound package contains user profile data, processing station **40** accesses user profile database **42** to enter the newly-received user profile. As indicated in block **72**, if the sender is a new user, processing station **40** creates a new entry for the sender and stores the received user profile for the sender. If the sender is a user who previously set up a user profile, processing station **40** updates the user profile data for the sender. In some embodiments, processing station **40** scans user profile database and looks for a matching entry when entering or modifying a user profile, as indicated in block **74**. A matching entry may be, for example, other users who share the same hobbies and interests, or other users who live in the same neighborhood as the sender. Processing station **40** may find a match by looking for a matching word in every row of the exemplary table **50** (**FIG. 5**). Upon finding a match (block **76**), processing station **40** creates a response package to the sender and transmits to data network **4** a list of users found to have matching entries, as indicated in block **78**. If there is no match, processing station **40** may send a response package stating that there is no match and move on to other parts of the outbound package received in block **60**.

[**0031**] Blocks **82** and **84** indicate that if the outbound package received in block **60** contains an announcement, processing station **40** accesses user profile database **42** and checks to see if the sender specified a distribution group, either previously or in the outbound package. If there is a distribution group, processing station **40** sends the announcement to all the users in the distribution group, as indicated in block **86**. If there is more than one distribution group, the outbound package should indicate the distribution group to which the announcement should be sent. If there is no distribution group or the outbound package specifies no distribution group, processing station **40** sends the announcement to all users, as indicated in block **88**. All announcements sent can contain a location stamp indicating the current location of the sender. Thus, if the announcement is "meet for dinner at 7 p.m. in Restaurant X," a recipient of the announcement can see the location of the sender. If the sender is in the vicinity of the recipient, the recipient may contact the sender and ask to share a ride.

[**0032**] If the outbound package received in block **60** contains a request, block **92** indicates that processing station **42** identifies the parameter specified by the sender. In the simplest request, the parameter may include only the name of a target user whose location the sender wants to know. Upon receiving such request, service provider **8** retrieves the current location of the target user from location database and transmits it to the sender in a response package. A request may include a geographical parameter in addition to the name of a target user. If, for example, the geographical parameter is "within a 10-mile radius," processing station **40** accesses location database **46** to obtain the location of the target user and the location of the sender and monitors the two locations (block **94**). Processor **40** uses map storage **44** to determine the distance between the target user and the sender every time new location data is entered (e.g., every two seconds), as indicated in block **96**. When the location between the sender and the target user are within the specified geographical parameter, which is within ten miles of each other in this example, processing station **40** transmits a response package to the sender. The response package, which contains a notification, is transmitted to data network **4**. Data network **4** forwards the notification to communication network **6**, which transmits the notification to mobile unit **10**-*i*. The sender receives the notification from mobile unit **10**-*i* through user interface device **12**-*i*.

[**0033**] In the simple case where the request only contains the identity of a target user whose location the sender wishes to know, the notification contains the current location of the target user. If the request contained a geographical parameter (e.g., within a 10-mile radius), the notification may be a beep or a flashing text. Any notification may include sound, flashing lights, text, or graphics depending on the embodiment and user interface device **12**-*i*. Upon receiving the notification, the sender (user **14**-*i*) may take a responsive action, for example by directly contacting the target user. The user-to-user (peer-to-peer) communication may be in the form of a phone call, e-mail, instant messaging, or chatting. If the user-to-user communication involves user interface device **14**-*i*, the exchanged messages may have a location stamp even if the communication does not involve service provider **8**, because mobile unit **10**-*i* derives and stores location data.

[**0034**] While the present invention is illustrated with particular embodiments, it is not intended that the scope of the invention be limited to the specific and preferred embodiments illustrated and described. For example, although the disclosed embodiments refer to GPS as the location-identification method used, other methods such as time difference of arrival (TDOA), angle of arrival (AOA), ray tracing/pattern recognition, and hybrid methods using network connections may be used.

What is claimed is:

1. A method of providing the location of a second mobile unit to a first mobile unit, said method comprising:

receiving from said first mobile unit a first packet including a current location of said first mobile unit;

receiving from said second mobile unit a second packet including a current location of said second mobile unit;

storing said current locations in a database; and

transmitting a data package to said first mobile unit in response to a request from said first mobile unit, wherein said data package comprises said current location of said second mobile unit retrieved from said database.

2. The method of claim 1, wherein said receiving and said storing are repeated at a regular time interval.

3. The method of claim 1, said packet further providing at least one of:

personal information about a first user, said first user being a user of said first mobile unit;

an announcement; and

a request for information concerning the current location of said second mobile unit.

4. The method of claim 3, wherein said first packet further provides said personal information and said data package comprises a list of mobile units used by users having similar personal information as said first user.

5. The method of claim 1, wherein said first packet further provides an announcement and a list of recipients, and wherein said data package comprises:

said announcement; and

a location stamp showing the location of said first mobile unit indicated by said first packet.

6. The method of claim 1, wherein said first packet is superimposed with a request for the current location of said second mobile unit, and wherein said transmitting comprises:

obtaining the current location of said second mobile unit from said database; and

creating said data package with said current location of said second mobile unit.

7. The method of claim 3, wherein said first packet comprises a request for a notification when said second mobile unit arrives at a reference point, and wherein said transmitting comprises:

calculating a distance between said second mobile unit and said reference point; and

including a notification to said data package when said distance is approximately zero.

8. The method of claim 3, wherein said personal information comprises at least one of:

name of said first user;

telephone number of said first user;

address of said first user;

e-mail address of said first user; and

hobbies of said first user.

9. The method of claim 1, wherein said receiving and said transmitting are done through a data network.

10. The method of claim 9, wherein said data network comprises the Internet.

11. The method of claim 9, wherein said data network comprises a wireless communication network, said wireless communication network being selected from a group consisting of CDPD, CDMA, GSM, iDEN, and AMPS.

12. The method of claim 3, further comprising excluding said first mobile unit from a group of potential recipients of said data package if so requested by said second mobile unit.

13. The method of claim 7 wherein said notification comprises at least one of:

sound;

flashing light;

text; and

graphics.

14. An apparatus for tracking the location of a second mobile unit from a first mobile unit, said apparatus comprising:

a processing station that receives location data from said first and second mobile units; and

a database of said location data connected to said processing station.

15. The apparatus of method **14**, further comprising a map storage connected to said processing station.

16. The apparatus of method **14**, further comprising a data network through which packets travel between said processing station and said first and said second mobile units.

17. The apparatus of method **16**, wherein said packets comprise a current location of said first and said second mobile units traveling from said first and second mobile units to said processing station at regular time interval.

18. The apparatus of method **16**, wherein said packets comprise a current location of said second mobile unit traveling from said processing station to said first mobile unit in response to a request from said first mobile unit.

19. The apparatus of method **16**, wherein said data network comprises the Internet.

20. A method of providing the current location of a second mobile unit to a first mobile unit, said method comprising:

said first mobile unit transmitting a first packet to a service provider computer, said first packet indicating the current location of said first mobile unit;

said second mobile unit transmitting a second packet to said service provider computer, said second signal indicating the current location of said second mobile unit;

said service provider computer receiving said first and second signals and storing said current locations of said first and said second mobile units in a database;

said service provider computer retrieving said current location of said second mobile unit from said database in response to a request from said first mobile unit; and

said service provider computer transmitting said current location of said second mobile unit to said first mobile unit.

21. The method of claim 20, wherein said transmitting is done through the Internet and a data network, said data network selected from a group consisting of CDPD, CDMA, GSM, iDEN, and AMPS.

22. The method of claim 20, wherein said request comprises a request to be notified when said second mobile unit arrives at a reference point, said method further comprising:

said service provider computer calculating the distance between said current location of said second mobile unit and said reference point, and

said service provider computer sending a notification to said first mobile unit when said distance is approximately zero.

23. A system of accessing current location of a second mobile unit from a first mobile unit, said system comprising:

a first mobile unit and second mobile unit connected to a data network; and

a processing station connected to a database containing the current locations of said first and second mobile units, said processing station also connected to said data network.

24. The system of claim 23 wherein each of said first and second mobile units comprises:

a GPS receiver for receiving GPS code sequences;

a processor that converts said GPS code sequences to location data;

a memory containing conversion data for converting said GPS code sequences to location data; and

a wireless modem connecting said first and said second mobile unit to said data network.

25. The system of claim 24 wherein said conversion data comprises:

preliminary location data; and

correction factors.

26. The system of claim 23, each of said first and second mobile units further comprising a user interface device connected to each of said first and second mobile units, said user interface device selected from a group consisting of personal digital assistant, laptop, wireless phone, and pager.

27. The system of claim 26, said user interface conveying at least one of:

sound;

flashing light;

text; and

graphics.

28. The system of claim 23, wherein said data network comprises the Internet.

29. The system of claim 23, wherein said data network comprises a wireless communication network selected from a group consisting of CDPD, CDMA, GSM, AMPS, and iDEN.

30. The system of claim 23, wherein said database comprises:

a storage for personal information of users;

a map storage; and

a storage for the current locations of said first and second mobile units.

31. The system of claim 24, wherein each of said first and second mobile units comprises a plurality of mobile units.

* * * * *