April 16, 1946. D. M. MacMILLAN ET AL 2,398,545

COLORED GAS SIGNALS

Filed Oct. 7, 1941

Fig. 1.

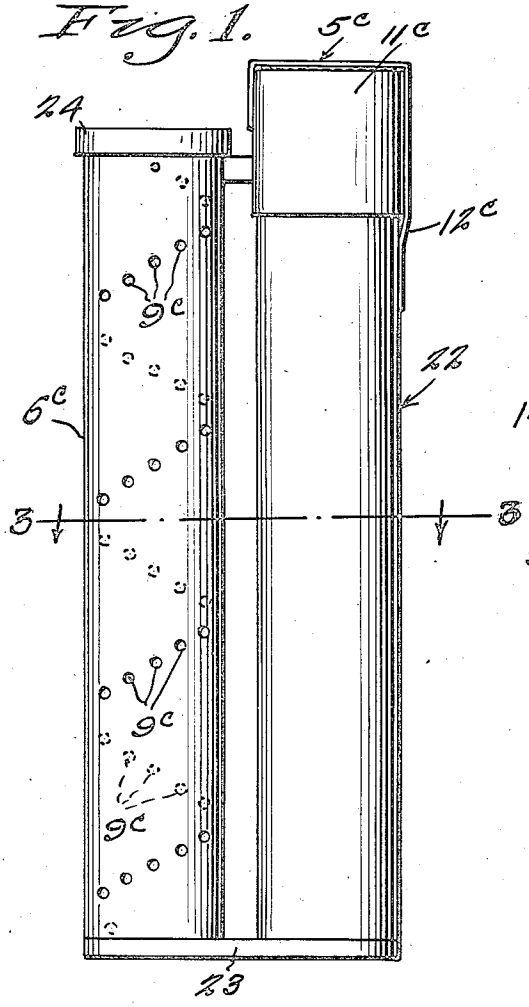

Fig. 2.

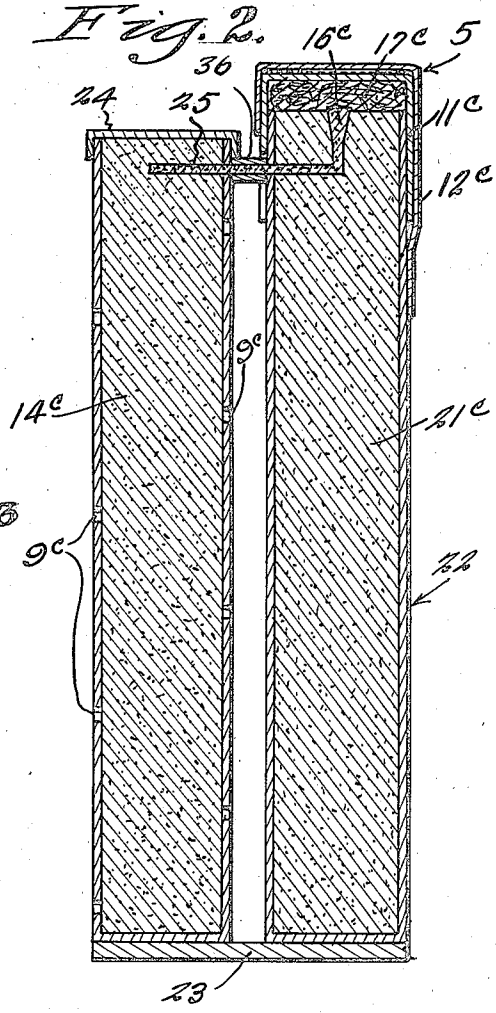

Fig. 3.

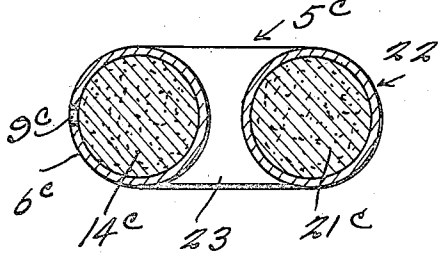

Inventor

Douglas M. MacMillan
John Vinton
Albert C. Paiva

By Clarence A. O'Brien

Attorney

Patented Apr. 16, 1946 2,398,545

UNITED STATES PATENT OFFICE

2,398,545

COLORED GAS SIGNAL

Douglas M. MacMillan, Berkeley, John Vinton, San Francisco, and Albert C. Paiva, Berkeley, Calif.; said Paiva assignor to said Vinton

Application October 7, 1941, Serial No. 414,034

3 Claims. (Cl. 102—37.8)

Our invention relates to improvements in colored gas signals for civilian and military use to provide visible warning in the daytime or in the nighttime and/or to provide illumination, and the primary object of our invention is to provide more reliable and efficient arrangements of the character indicated.

Other important objects and advantages of our invention will be apparent from a reading of the following description taken in connection with the appended drawing, wherein for purposes of illustration we have shown preferred embodiments of our invention.

In the drawing—

Figure 1 is a side view of a device embodying a form of the invention.

Figure 2 is an approximately central longitudinal sectional view taken through Figure 1.

Figure 3 is a horizontal sectional view taken through Figure 1, line 3—3.

The chemical combustible compounds utilized in the various forms of the invention shown in the drawing are especially devised, in the case of the colored gas producing composition, to produce a brilliant and rich color, and in the case of the illuminating vapor or gas, to provide a brilliant and efficient source of illumination, the vapors or gases being capable of mixing together without undesirably modifying each other or destroying either the rich full color or the degree of illumination when the gases are evolved simultaneously and in close proximity to each other.

Our color gas producing compound is a compacted porous mixture which consists of a suitable oxidizer, such as potassium chlorate, a suitable combustible substance such as lactose, a suitable aniline compound or die such as paranitraniline red, with or without an intensifier such as montan wax. The preferred compound of this colored gas producing medium is as follows:

	Parts
Potassium chlorate	16 to 20
Lactose	12 to 16
Paranitraniline red	70 to 74
Montan wax	0 to 2

Another colored gas or vapor producing compound in conformance with the present invention is preferably composed of—

	Parts
Sodium nitrate	25 to 30
Sulphur	10 to 20
Red arsenic sulphide	25 to 35

The preferred illumining gas or vapor producing compound is as follows:

	Parts
Strontium nitrate	40
Potassium chlorate	12
Sawdust	31
Dextrine	7
Red gum	10

Referring now to Figures 1, 2 and 3, the form therein shown is especially suitable to be thrown from a moving vehicle, as the same will come to rest quickly and avoid excessive rolling, because of its shape. This form is especially suitable for either day or night signaling as it combines the fullest efficiency of both color ignition and illumination. The device comprises the colored gas emitting container 6c and the illumination producing composition container 22, both of suitable metal or other suitable material so that they do not burn away and having their closed bottoms secured in side by side spaced relation on a base 23. The sides of the container 6c are perforated by holes 9c which are preferably although not necessarily spirally arranged, while the sides of the container 22 are imperforate. A plain shallow cap 24 closes the upper end of the container 6c. A removable cap 11c held in place by a tape 12c removably closes the upper end of the container 22 to hold wadding 17c in place on the upper end of the illuminating material body 21c which tilts the interior of the container 22 flush with the upper end thereof. A starting friction pellet 16c is present in the upper end of the body 21c to be ignited by the friction part of the cap 11c when the cap has been removed. Various materials can be used to provide the friction starting pellet. We have successfully utilized one comprising by weight 13 parts each of ferrous sulphide and antimony trisulphide, 21 parts potassium nitrate and 3 parts of dextrin. The friction starting pellet has a lateral extension 25 which extends through a tube 36 connecting the upper parts of the containers 6c and 22, and through which the pellet portion 25 passes to produce ignition of the upper end of the color producing chemical body 14c.

The air space between the containers 6c and 22 prevents undesirable transmission of heat between the two containers and their contents. The upper end of the container 6c being closed, the color producing vapors or gases leave the container only by means of the apertures or holes 9c, which are considerably depressed below said upper end whereas the illumination produc-

ing vapors are emitted from the container 22 through the open top thereof, so that there is no direct mixture or conflict between the two gases or vapors, at their formative stage which otherwise would impair their mutual color or effectiveness, the commingling of the gases taking place only as the colored gas rises naturally into contact with the illumining gas.

Thus it will be understood that present invention comprises means whereby colored "smoke" is produced by emitting the colored gas at a point below the fires of the burning end of the flare in order to preserve the richness and intensity of the colored gas produced. By the disclosed method any color of gas or smoke can be obtained by substituting for the paranitraniline red in the above stated formula, a suitable aniline dye.

Although we have shown and described herein preferred embodiments of our invention, it is to be definitely understood that we do not wish to limit the application of our invention thereto, except as may be required by the scope of the subjoined claims.

Having described the invention, what is claimed as new is:

1. A signal of the character described comprising a first tubular container of a substantially non-combustible material and having an imperforate side wall, an ignitable and combustible composition in said container adapted to burn with a brilliant luminous flame upon ignition and provide a torch, said container having only one end thereof open to direct the flame evolved by said composition away from said first container along and in the direction of the longitudinal axis of said first container, a second tubular container having a perforate side wall, a combustible composition in said second container adapted to burn substantially without a flame but with copious evolution of a colored gas to provide a smoke-like signal, said second container having a closure at each end thereof to force evolved gas to be directed from said second container through the perforate side wall thereof and away from the open end of said first container to avoid contact between the colored gas emitted from the second container and the flame emitted from the first container, and ignition means for igniting an end of said flame-emission composition in said first container and for igniting the smoke-emission composition in said second container to effect simultaneous burning in both said containers.

2. A signal as in claim 1 wherein the first container is positioned alongside of the second container but spaced therefrom with that end of the first container from which the torch flame is emitted upon ignition lying beyond the adjacent and corresponding end of the second container.

3. A signal as in claim 1 wherein the first and the second container are secured in a side-by-side substantially parallel but spaced relationship on a common support base with the upper torch flame emission end of the first container lying above the adjacent but spaced end of the second container.

DOUGLAS M. MACMILLAN.
JOHN VINTON.
ALBERT C. PAIVA.