B. HANSEN.

RECEPTACLE FOR CHEMICAL PURPOSES.

APPLICATION FILED JUNE 7, 1916.

1,205,619. Patented Nov. 21, 1916.

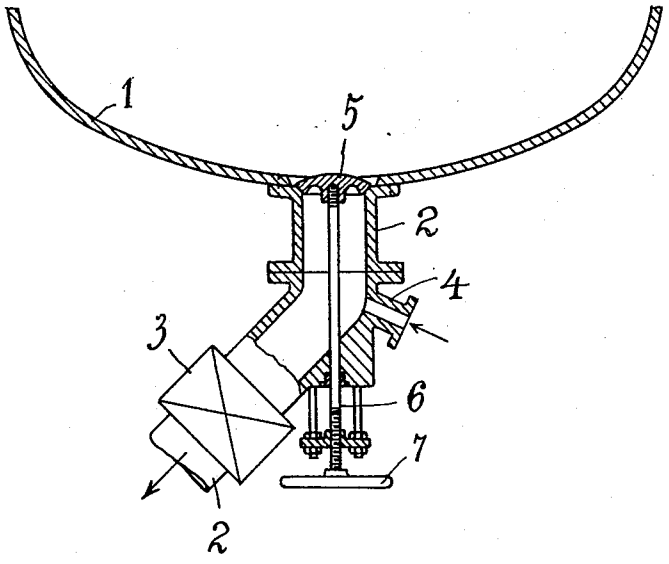

Inventor,
Bjarne Hansen,
By [signature]
Atty.

THE NORRIS PETERS CO., PHOTO-LITHO., WASHINGTON, D. C.

UNITED STATES PATENT OFFICE.

BJARNE HANSEN, OF NOTODDEN, NORWAY, ASSIGNOR TO NORSK HYDRO-ELEKTRISK KVAELSTOFAKTIESELSKAB, OF CHRISTIANIA, NORWAY.

RECEPTACLE FOR CHEMICAL PURPOSES.

1,205,619. Specification of Letters Patent. Patented Nov. 21, 1916.

Application filed June 7, 1916. Serial No. 102,369.

To all whom it may concern:

Be it known that I, BJARNE HANSEN, a subject of the King of Norway, residing at Notodden, Norway, have invented certain new and useful Improvements in Receptacles for Chemical Purposes; and I do hereby declare the following to be a full, clear, and exact description of the invention, such as will enable others skilled in the art to which it appertains to make and use the same, reference being had to the accompanying drawings, and to letters or figures of reference marked thereon, which form a part of this specification.

This invention has for its object improvements in receptacles for chemical purposes.

In receptacles for carrying out chemical reactions of different kind, as for instance for producing ammonia from calcium-cyanamid, the discharge pipe in the bottom of the receptacles is very often provided with an arrangement for supply of steam. The steam pipe is most generally connected to the discharge pipe at a point between the receptacle proper and a sluice-valve in the outlet. This arrangement involves, however, inconveniences in several respects, as for instance owing to the hardening of the mud that may accumulate in the discharge pipe above the sluice-valve.

According to the present invention the said drawbacks are removed in the manner, that the discharge pipe beside the sluice-valve above mentioned is provided with a further valve or damper, that shuts the inlet of the discharge pipe toward the receptacle. Also this valve or damper may be manipulated from outside.

The invention is illustrated in the annexed drawing, giving a section through the bottom of a digester, that is provided with an outlet of the sort described.

1, indicates the wall of the digester, 2 the discharge pipe and 3 the sluice-valve.

4 is the steam pipe and 5 the tight-fitting valve or damper arranged for manipulation from outside by means of a shaft with the screw 6 and the hand-wheel 7.

The short pipe 2 has a continuation 2′ at an angle thereto. The stem 6 of the valve 5 passes upwardly through the angularly disposed continuation 2′ and thus permits the use of a straight stem 6 on which the valve 5 is supported and by which it is actuated, there being no guide at the valve seat for the valve stem, as it is desirable to have an unobstructed passage through the valve seat and pipe 2.

The arrangement of the damper 5 makes it possible by means of steam from 4 to clear away all the mud that might accumulate in the pipe 2. When the damper is shut, the mud can be washed out by opening the sluice-valve 3. Thus any filling up of the discharge pipe is avoided. The arrangement of double closure does not, however, prevent the formation of hard crusts on the bottom of the digester just above the damper 5. Such crusts may form very easily as the stirring device of the digester cannot be allowed to touch the bottom. By giving the spherically surfaced valve or damper the shape and position shown in the drawing, the further advantage is gained, that the crust is broken up by the pressure of the damper in opening the same, so that free admission of steam to the interior of the receptacle is secured.

Claims.

1. In a receptacle for carrying out chemical reactions, a discharge pipe connected to the receptacle, a free outlet from the receptacle to said pipe, a spherically surfaced valve controlling said outlet and opening into the receptacle, a valve in said pipe adjacent the aforesaid valve and a steam inlet between the valves.

2. In a receptacle for carrying out chemical reactions, a short, downwardly directed discharge pipe, a continuation of said pipe at an angle, a free outlet from the receptacle to said pipe, a spherically surfaced valve controlling said outlet and opening upwardly into the receptacle, a second valve in said continuation adjacent the first mentioned valve, and a steam inlet between the valves in said continuation.

In testimony that I claim the foregoing as my invention, I have signed my name in presence of two subscribing witnesses.

BJARNE HANSEN.

Witnesses:

C. VARMAN,

C. F. HANSEN.

Copies of this patent may be obtained for five cents each, by addressing the "Commissioner of Patents, Washington, D. C."